EQUIPMENT MANUAL 75

creed

MODEL

# Seventy-Five

TELEPRINTER

**Creed & Company Limited**

HOLLINGBURY

BRIGHTON SUSSEX

Telephone BRIGHTON 507111
Telex 87169
Cables TELEPRINTA Telex BRIGHTON

ITT

## ASSOCIATED PUBLICATIONS

Sales Publication ... ... ... ... 041-010-2E

Manual Issue Date ... ... ... ... October 1965

© 1965 by Creed & Company Limited
Printed in England by Specialised Printing Services Ltd., Harford House, 7/9 Charlotte Street, London, W.1.

MODEL SEVENTY-FIVE TELEPRINTER

# INTRODUCTION

This equipment manual contains technical data, technical description, installation, maintenance, lubrication, adjustment instructions and parts list for a standard Creed Model Seventy-five Page Teleprinter. A standard model is defined as a Transmitter-Receiver fitted with Reperforating Attachment, Two-Colour Printing, Answer-Back, Operation Counter and Automatic Carriage-Return/Line-Feed facilities. Special applications of the teleprinter will be covered by Appendices suitable for insertion in Part 6 of this manual, and will be obtainable on request.

The manual supersedes Instruction Book No.75 (4th Edition) and Parts List No.1075 (3rd Edition). All relevant changes and additions to these two books have been incorporated in this manual. Any future changes will be issued in the form of loose-leaf amendment sheets and, when received, they should be actioned and entered up on the Amendment Record Sheet provided on the following page.

References to 'front', 'rear', 'left-hand' and 'right-hand', whether for units or the complete machine, are based on an operator's view of the machine unless otherwise stated. Thus the keyboard is at the front and the Reperforating Attachment on the right-hand side.

In this manual, explanatory notes underneath portions of the text are shown in two forms, i.e. ■ or ★. It is important that engineers are aware of the difference between the two symbols, as follows.

■ This symbol is used whenever there is a possibility of damage to the machine or personal injury to the engineer if the technical content of the note is ignored. In isolated instances, it is also used to stress the importance of a particular note.

★ This symbol is used for normal technical or explanatory notes to the text.

For the benefit of customers outside the U.K. who may use a metric measurement system, an Imperial/Metric conversion table is provided in Part 6, Appendix A.

# AMENDMENT RECORD SHEET

| AMENDMENT NO. | AMENDED BY | DATE | AMENDMENT NO. | AMENDED BY | DATE |
|---|---|---|---|---|---|
| 1 | | | 26 | | |
| 2 | | | 27 | | |
| 3 | | | 28 | | |
| 4 | | | 29 | | |
| 5 | | | 30 | | |
| 6 | | | 31 | | |
| 7 | | | 32 | | |
| 8 | | | 33 | | |
| 9 | | | 34 | | |
| 10 | | | 35 | | |
| 11 | | | 36 | | |
| 12 | | | 37 | | |
| 13 | | | 38 | | |
| 14 | | | 39 | | |
| 15 | | | 40 | | |
| 16 | | | 41 | | |
| 17 | | | 42 | | |
| 18 | | | 43 | | |
| 19 | | | 44 | | |
| 20 | | | 45 | | |
| 21 | | | 46 | | |
| 22 | | | 47 | | |
| 23 | | | 48 | | |
| 24 | | | 49 | | |
| 25 | | | 50 | | |

PART 1 DATA SUMMARY AND TECHNICAL DESCRIPTION

PART 2 INSTALLATION AND OPERATION

PART 3 MAINTENANCE AND LUBRICATION

PART 4 ADJUSTMENTS

PART 5 DISMANTLING AND ASSEMBLING

PART 6 APPENDICES

PART 7 PARTS LIST

# P A R T  I

## CONTENTS


Page

SECTION A. DATA SUMMARY

1. General . . . . . 1
2. Receiver . . . . . 2
3. Keyboard and Transmitter . . . . . 4
4. Optional Features . . . . . 6

SECTION B. OUTLINE OF OPERATION . . . . . 9

SECTION C. TECHNICAL DESCRIPTION

1. Introduction . . . . . 11
2. Construction . . . . . 11
3. Unit Functions . . . . . 11
4. Internal Circuits . . . . . 18
5. External Circuits . . . . . 19

# LIST OF ILLUSTRATIONS


Fig. 1.1 Model Seventy-five - Block Schematic
Fig. 1.2 Aggregate Motion - Lift Linkages
Fig. 1.3 Typehead - Layer Selection
Fig. 1.4 Typehead - Layer Arrangement (C.C.I.T.T. No.2)
Fig. 1.5 Unit Identification
Fig. 1.6 Aggregate Motion Mechanism
Fig. 1.7 Transmitter-Receiver Signals Wiring
Fig. 1.8 Receiver-only Signals Wiring
Fig. 1.9 Component Location
Fig. 1.10 Governed Motor Wiring
Fig. 1.11 Single-current Loop Circuit
Fig. 1.12 2-wire Simplex Circuit
Fig. 1.13 Switched Simplex Circuit
Fig. 1.14 Timing Diagram (75 bauds)

# PART I

## A. DATA SUMMARY

### 1. GENERAL

#### SIGNALLING

| | |
|---|---|
| Speed | Alternative models for 45, 50, or 75 bauds, i.e. 60, 66, or 100 words per minute.<br><br>Optionally available with dual-speed gear-box permitting manual speed change by operator between 45 and 50 bauds, i.e. 60 and 66 words per minute. |
| Code characteristics | Start signal, five code signals, and stop signal. Start and code signals are each of unit length appropriate to the baud speed; the stop signal is a nominal 1-1/2 units in length. |
| Mode | Single- or double-current. Multi-contact transmitter adjustable from one mode of signalling to the other. |
| Voltages and currents | Single-current: 120V, 50 mA.<br><br>Double-current: +80V, 0, -80V. Line current 20 mA if 2 000 ohms of current limiting resistance is in parallel with a 2 $\mu$F capacitor. Without a capacitor the current should be 25 mA. |
| Circuits | Single-current – Normal loop circuit but local record obtained mechanically. Send-receive switch is used to short-circuit the transmitter contacts during reception. Electromagnet armature is disconnected from the receiver automatically during transmission.<br><br>Double-current – Switched or two-wire simplex with mechanical local record. No leak resistor is required. Send-receive switch used to disconnect the transmitter contacts from line during reception. |

#### DIMENSIONS (standard cover)

| | |
|---|---|
| Receiver-only | 16 in. wide x 13½ in. deep x 11 in. high (40.6 x 34.3 x 28 cm). |
| With 4-row keyboard | 16 in. wide x 16½ in. deep x 11 in. high (40.6 x 41.9 x 28 cm). |
| With Reperforating or Tape Reader Attachments | These units fit on the right-hand side of the machine and either or both will increase the overall width to 18½ in. (47 cm). The plinth accommodating the paper tape increases the height to 12½ in. (31.6 cm). |

#### DIMENSIONS (silencing cover)

| | |
|---|---|
| Keyboard machine | 16 in. wide x 21 in. deep x 13 in. high (40.6 x 53.3 x 33 cm). |
| With Reperforating or Tape Reader Attachments | Width increased to 21 in. (53.3 cm). |

APPROXIMATE WEIGHTS (including cords and paper roll)

| | |
|---|---|
| Receiver-only | 36½ lb (16.5 Kg). |
| Transmitter-Receiver | 45¼ lb (20.5 Kg). |
| With Reperforating Attachment and tape drawer | Add 10 lb (4.5 Kg). |
| With Tape Reader Attachment | Add 2 lb (0.9 Kg). |
| With Silencing Cover | Add 23 lb (10.4 Kg). |

## 2. RECEIVER

MARGIN

| | |
|---|---|
| 50 bauds | Greater than ±40%. |
| 75 bauds | Greater than ±35%. |

PAPER

| | |
|---|---|
| Standard width | 8½ in. (21.6 cm). |
| Margins | With 8½ in. wide paper, margins are adjustable independently between 0.5 and 0.8 in. |
| Size of roll | Standard teleprinter roll is 3½ in. (8.9 cm) in diameter. Slot provided at rear of machine to permit larger externally-mounted roll to be used. |
| Feed action | Machine may be fitted with either a friction-feed only platen, or dual-purpose friction/sprocket-feed platen with retractable pins. Machine may be converted from sprocket to friction-feeding and back again by operating a lever. |
| Sprocket paper | Width - edge to edge - 8½ in. (21.6 cm). Horizontal distance between centres of holes - 8 in. (20.3 cm). Vertical separation of holes - centre to centre - ½ in. (12.7 mm). |
| Paper exhaust alarm | Alarm contacts can be provided for both standard page roll and sprocket feed paper. |

PRINTING

| | |
|---|---|
| Characters | Capital letters at 1/10 in. (2.54 mm) pitch. |
| Line length | 69 - 74 characters, adjustable. |
| End-of-line indicator | May be preset to light a neon lamp visible through the machine front panel (and/or operate an externally connected alarm) anywhere between the 15th and 74th character from the beginning of the line. |
| Line spacing | Set by the operator to either single-line spacing of 1/6 in. (4.2 mm) or double-line spacing of 1/3 in. (8.5 mm). |
| Multiple copies | At least 5 carbon copies may be obtained. For greater numbers a stencil can be cut. |
| Printing pressure | Light or heavy printing pressure by operator setting. |

## INK RIBBON

| | |
|---|---|
| Type | Standard typewriter ribbon, ½ in. wide, with a small stud to operate reversing mechanism, and wound on a flanged spool. |
| Spool dimensions | Diameter of flange 2 in. (52.8 mm). Overall width 5/8 in. (15.8 mm) max. Diameter of central hole 0.156 – 0.160 in. |
| Life | Approximately 100 hours of operation at 66 wpm. |

## MOTOR

| | |
|---|---|
| Types | (a) Series-wound, a.c. governed motors for any single voltage in range 100 – 125V, 200 – 250V.<br>(b) Series-wound, d.c. governed motors for voltages as in (a), plus 160V.<br>(c) Shunt-wound d.c. governed motors for 28V and 48V.<br>(d) Synchronous motors for voltage range as in (a). |
| Frequency | Type (a). Single-frequency motors for 40, 50 and 60 cycles. Dual-frequency motor for 50/60 cycles.<br>Type (d). Single-frequency motors for 50 and 60 cycles. |
| Speeds | Governed motors 4 200 rpm. Synchronous motor – 3 000 rpm for 50 cycles, 3 600 rpm for 60 cycles. |
| Governor | Centrifugal governing action with provision for adjusting the operating point. Speed can be checked visually by viewing stroboscopic bands on governor housing through a 140 dvs tuning fork (Creed Tool TA1117/40, see Fig.6.1, item L). |
| Speed stability (governed motors) | ±0.5% for voltage variations of ±10% about nominal. Effect on speed of temperature variations in the range 40 – 100°F is negligible. |
| Starting time | With the mains voltage at nominal value, the motor runs up to full speed in less than one second. |
| Power consumption | Types (a), (b) and (d) – less than 100 watts. Type (c) – less than 50 watts. |

## AUTOMATIC START AND STOP SWITCH

| | |
|---|---|
| Facility | Motor starts automatically on first mark-to-space transit of the electromagnet armature. Will start on receipt of a signal of half-element length at any speed up to 100 wpm. Auto-start not generally fitted to parallel input machines. |
| Start from keyboard | Motor may be started by the depression of any key. |
| Stop delay | 60 – 70 seconds, adjustable. |

## ELECTROMAGNET

| | |
|---|---|
| Construction | Two 110 ohm coils in series, with a combined inductance of 4½ H measured at 50 c/s, 40 mA. Centralising springs used to increase sensitivity. |

| | |
|---|---|
| Single-current working | Additional pair of springs used for single-current operation. These are permanently anchored to the selector unit and require only to be hooked into position to change from double- to single-current operation. Simple manual adjustment obtains correct single-current bias. |

PARALLEL INPUT

| | |
|---|---|
| Code solenoids | 50% rated code solenoids for parallel operation (5-wire + trip) for 12 volts, 24 volts, 50 volts, and 100 volts can be provided. Resistance of these solenoids is 25.5 ohms, 92.6 ohms, 390 ohms, and 1495 ohms respectively. The 50 volt version requires an additional 680 ohms series resistor, the 100 volt version a 2.2 kilohm series resistor. |
| Trip magnet | A standard electromagnet modified with special coils of 50 ohms (12V), 200 ohms (24V), 55 ohms (50V), or 220 ohms, (100V). |

ORIENTATION DEVICE

| | |
|---|---|
| Construction | Orientation device provided for measuring tolerance of the receiver to incoming signals in the absence of a Distortion Measuring Set. Also used to centralise the margin of the machine. Adjustment of the device changes the position of the selector cam detent and hence the rest position of the selector camsleeve. |
| Range | ±70% of a signal element length. |
| Clutches | New type of clutch mechanism fitted to Mark 4 machines ensures a low, almost constant pick-up time and high torque transmission. |

TYPEHEAD

| | |
|---|---|
| Construction | Types mounted on vertical cylinder in four rings, each containing up to sixteen characters. |
| Movement | The typehead has four degrees of movement – vertical and rotary to bring the selected character opposite the printing point, forwards for printing and horizontal to move to the next character position. |
| Print action | No typehammer used – the typehead itself strikes the ink ribbon and platen. |
| Visibility | Typehead moved clear of printing position after each character is printed. |

AGGREGATE MOTION MECHANISM

| | |
|---|---|
| Construction | Vertical and rotary motions of the typehead controlled by cam-driven link-type aggregate motion mechanism. |

## 3. KEYBOARD AND TRANSMITTER

CONSTRUCTION

| | |
|---|---|
| Keyboard | Motorised keyboard linked mechanically to the translator unit provides a 'mechanical' local record. |

| | |
|---|---|
| Transmitter | Multi-contact construction. May be used for either single- or double-current transmission after readjustment. Transmitter may also be arranged to give a 5-unit parallel output with trip signal. |

## KEYS

| | |
|---|---|
| Layout | 3-row or 4-row layouts with full or partial shift-lock facility available. |
| Dimensions | Stroke – 1/4 in. (6.3 mm). Pressure – 7 oz. (198 grammes) approximately. Pitch of keys in same row – 3/4 in. (19 mm). Vertical pitch of rows – 9/32 in. (7.14 mm). |
| Key buttons | Green buttons with white lettering are standard. Alternative colours available are Green, Red, Black or Blue for the shell with White, Yellow, Red, or Black lettering. |
| Function keys | Carriage Return, Line Feed, Bell, Letters, Figures, Run Out, Space, Who-Are-You?, Here Is, Manual Carriage Return. |
| Timing | Keys released about one-third of the way through the transmitting cycle so permitting the next key to be depressed. This gives the operator a measure of freedom to type irregularly about the cadence speed of the keyboard. |

## TRANSMITTER

| | |
|---|---|
| Construction | Transmitter contact assembly mounted on top of transmitter unit. Contacts actuated by cams on translator cam shaft. Individual contacts provided for the five code elements and for start and stop elements. Assembly can be adjusted for either single-current, double-current, or 5-wire parallel operation. |
| Electrical connexions | Electrical connexions to the transmitter contacts are made through an 18-way plug and socket which permits the transmitter assembly to be easily removed. |
| Send-receive switch | Forms part of transmitter contact assembly and is operated by the lag weight and a crawler clutch mechanism mounted on the selector unit. The tongue of the switch moves to the send contact immediately a key is depressed but its return to the receive contact is delayed until towards the end of the next cycle. |
| LAG WEIGHT | A spring-operated weight forming part of the Translator Unit that is released whenever a key is depressed. The subsequent movement of this weight releases the translator camshaft after a time delay of some 15 ms on 75-baud operation. This delay is required to extend the 6½-unit cycle of the translator camshaft to 7½-units when the translator (i.e. receiving) camshaft is being used for transmitting. Automatically reset at the end of the cycle. |

## 4. OPTIONAL FEATURES

### ANSWER-BACK

| | |
|---|---|
| Facilities | Normally transmits 20 characters (but see below). May be fitted to either a transmitter-receiver or a receiver-only version of the teleprinter. In the latter case, receiver must be fitted with a transmitter contact assembly.<br>On receiver-only machines, unit operates on receipt of a 'Who-are-you?' signal. On transmitter-receiver machines, either on receipt of WRU? signal or on depression of the 'Here is' key. |
| Number of characters | May be adapted to transmit any number of characters from one to twenty. |
| Release delay | Automatically inserted between the end of the fifth element of the received 'Who-are-you?' signal and the beginning of the start element of the first answer-back character. Delay is 165 ms minimum for 50 baud operation, 138 ms minimum for 75-baud operation. |
| Inhibition | Home answer-back unit is automatically inhibited when operator depresses 'Who-are-you?' key. Keyboard inhibited while machine is transmitting from the answer-back unit. |
| Who-are-you?' contacts | Transmission or receipt of the 'Who-are-you?' signal closes a pair of contacts which may be used to operate an external alarm. |

### REPERFORATING ATTACHMENT

| | |
|---|---|
| Facilities | Fitted on right-hand side of the machine. Provides a record of outgoing and/or incoming messages on a 5-track, 11/16 in. (17.5 mm) side paper tape. Fully-punched tape only. |
| Controls | 'Perforator On/Perforator Off' knob, and 'Back Space' button. |
| Inhibition | Perforating action can be automatically inhibited when certain combinations are registered, e.g. Bell and WRU? functions are not normally punched in tape for communications work. |
| Tape reel | A standard 1 000-foot reel of tape is housed in a shallow drawer beneath the main base. Access by sliding drawer towards the front of the machine. |

### TAPE READER ATTACHMENT

| | |
|---|---|
| Position | Mounted on the right of the machine with the tape feed from the front to rear. |
| Facilities | Reads fully-punched 5-track paper tape 11/16 in. (17.5 mm) or 7/8 in. (22.2 mm) wide with either centre or advanced feed holes. Local copy provided as tape is transmitted. Unwanted parts of the tape can be skipped. |
| Controls | Single three-position knob controls the Reader.<br>Position 1 – Reader inoperative.<br>Position 2 – Read and feed tape. |

Position 3 - Reader skips one character each time keyboard is operated.

Reader automatically arrested if tape breaks or tightens.

Off-normal contacts

Off-normal contacts may be fitted to provide switching for external circuitry.

TWO-COLOUR PRINTING

Provides means of differentiating between incoming and outgoing traffic. Incoming traffic printed in black or red, as required; outgoing traffic is then in opposite colour. Solenoid operation of the colour change mechanism can be provided.

OPERATION COUNTER

Facility

Provides visual indication of number of characters registered (transmitted or received) by teleprinter in units of 10 000 characters. A unit is thus equivalent to 25 minutes of continuous operation at 50 bauds.

Use

The counter is used to determine when the machine is due for overhaul or other maintenance attention.

AUTOMATIC CR/LR FEATURE

Carriage may be arranged to return automatically to the beginning of the line and to line feed when it has reached a predetermined point on the line without receiving the signals for these functions. Operating is adjustable from 69 - 74 characters from the beginning of the line.

COMBINED CR/LR FEATURE

Normal carriage return function bar may be replaced by one which combines the functions of the carriage return and line feed bars. In these circumstances the normal line feed bar is removed so that line feed signals are ignored.

Use

Used to prevent overprinting on circuits where there is a danger of spurious carriage return signals. Does not interfere with normal operating procedure.

SPECIAL VERSIONS FOR COMMUNICATIONS USE

Signal regenerator

As incoming signals to the teleprinter electromagnet are automatically re-transmitted in sequential form, the machine may be adapted to provide regenerative repeatering of signals on long omnibus circuits.

Combined parallel/sequential output

While retaining normal sequential transmission and reception, an additional parallel output may also be obtained. This can be used to feed a relay tree and thereby control either internal or external special facilities. Typical examples of these would be - motor stop, change of printing colour, function inhibition, external switching functions, and the operation of selective-calling equipment.

**SPECIAL FACILITIES FOR DATA TRANSMISSION**

Examples

Among the special facilities which can be provided are:- Sequential to parallel and parallel to sequential signals conversion. Print, character feed, line feed and perforator inhibition. 11½ character per second print-out from a parallel input. Combined sequential/parallel output or input.

**FORM FEED**

This device automatically feeds printed sprocket-feed stationary to a pre-determined point on each form. It is operated either from incoming signals or from depression of a key button. Contacts provided for control of external equipment while the forms are being fed. Form length is at present 51 line-feeds long.

# B. OUTLINE OF OPERATION

## RECEPTION

Signals from the distant teleprinter are received on a polarised electromagnet whose armature moves between the marking and spacing stops in response to the reversals of line current (double-current working), or the current and no-current elements (single-current working), which compose the incoming code combination.

The start signal releases the selector unit camshaft which then makes one revolution during which it converts the movements of the electromagnet armature into a static setting on five two-state selecting pins in the translator unit. Towards the end of this revolution the selector unit releases the translator shaft and is brought to rest immediately afterwards by the stop signal.

While the next character is being processed by the selector unit and transferred on to a second group of five pins, the translator unit, acting through the aggregate motion mechanism, positions the typehead in accordance with the code established on the first group of pins. The typehead them impresses the selected character on the paper and afterwards comes to rest until released at the end of the next selection cycle.

## TRANSMISSION

Operation of the keyboard sets up the code combination of the selected key on five combination bars and simultaneously depresses a trip bar common to all keys. Each combination bar is mechanically linked to one of the five code selecting pins in the translator unit; the trip bar is linked to the translator clutch release mechanism. The single act of depressing a key will thus create the appropriate code combination, convey this code to the translator unit, and then release the translator unit clutch.

The transmitter unit is located above the translator unit and consists of two banks of contacts which are mechanically independent but electrically interconnected as shown in Fig. 1.7. One bank is made up of five changeover contact sets which reflect the code setting on the selecting pins, and which operate simultaneously. The other bank consists of seven make contact sets which operate sequentially; five of these are linked to their associated changeover code contacts, and the remaining two contacts produce the start and stop signals.

Once the code for the depressed key has been established on the selecting pins and the translator clutch has been released, the changeover contact bank takes up the code setting. The seven sequential contacts, which are driven by cams on the translator shaft, then scan this setting at the appropriate intervals and so transmit the required sequence of start signal, five variable code elements, and the stop signal to line.

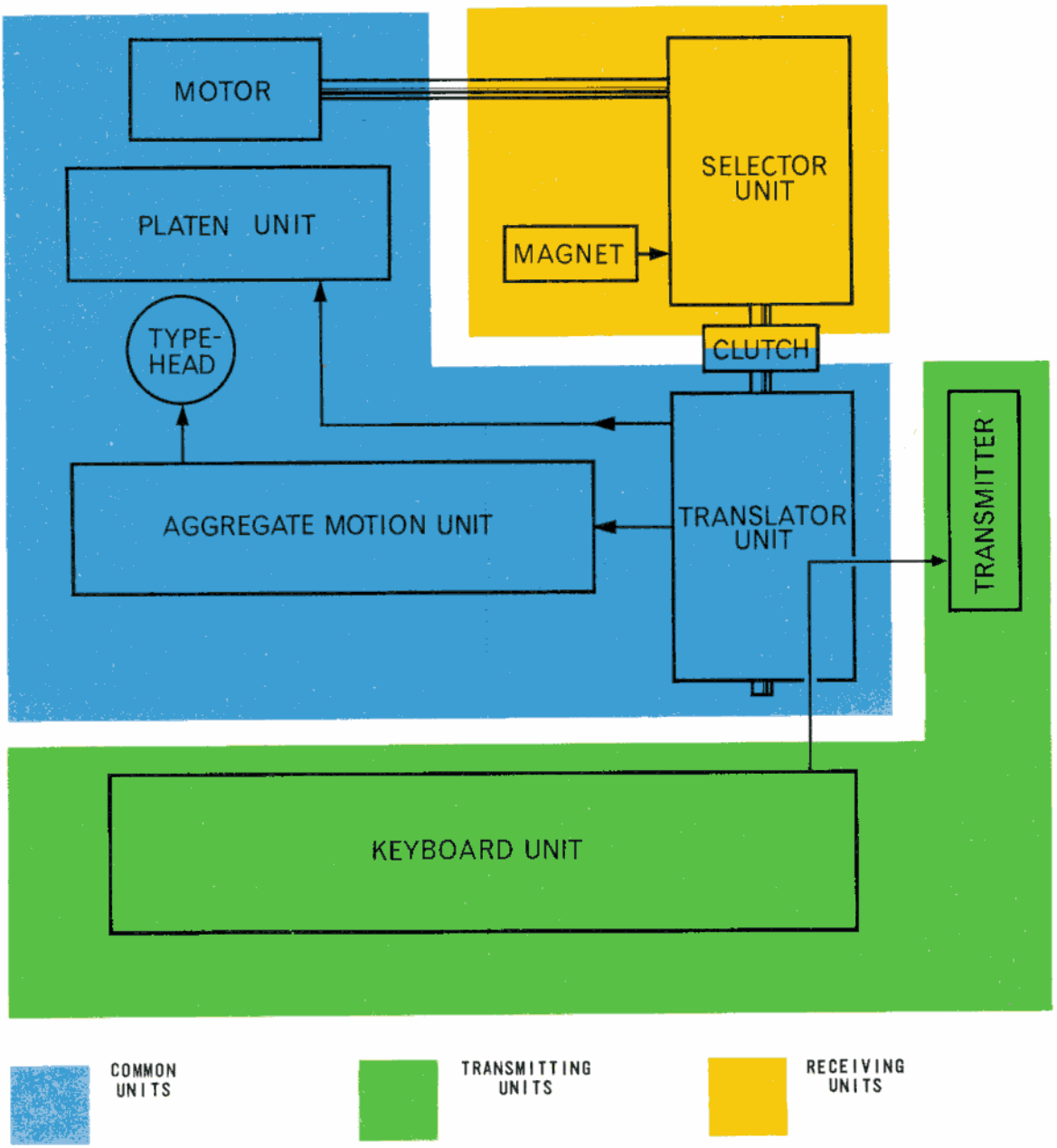


Fig. 1.1 MODEL SEVENTY-FIVE — BLOCK SCHEMATIC

# C. TECHNICAL DESCRIPTION

## 1. INTRODUCTION

Since the Creed Model Seventy-five Teleprinter was introduced in 1958 more than ten thousand machines have been produced. Both the standard telecommunications version and its data processing variations are in service in more than 50 countries and because of this wide distribution the general operating principles are by now fairly well known. This section of the manual therefore deals only briefly with the operating principles of the machine although some of the more novel features such as the aggregate motion translation mechanism are described in more detail.

Technical courses for maintenance engineers covering all aspects of the operation and maintenance of the Model Seventy-five machine are available at the Company's Training School in Sussex, England. Applications to attend these courses should be addressed to the Training Manager.

## 2. CONSTRUCTION

The machine is of unit construction and consists of 16 units listed below and identified in Fig. 1.5, except for the Aggregate Motion Unit which is shown at B, Fig. 7.2.

1. Main Base Unit
2. Motor Unit
3. Electromagnet
4. Selector Unit (includes most of the operating mechanism of the Automatic Motor Switch, although the actual motor switch is located underneath the main base).
5. Translator Unit
6. Typehead Unit
7. Aggregate Motion Unit (links Translator Unit to Typehead Unit)
8. Ribbon Unit (carried on typehead carriage casting)
9. Platen Unit (carries paper roll and paper transport mechanism)
10. Transmitter
11. Keyboard
12. Selector Frames Unit (links Keyboard to Translator Unit and Transmitter)
13. End-of-Line Indicator and Carriage Return Spring Drum
14. Reperforating Attachment (with machines fitted with a Reperforating Attachment, a dummy plinth which stores the reel of paper tape is located underneath the main base).
15. Answer-Back Unit
16. Operation Counter

### Drive

The receiver has two camshafts - a selector shaft, and a translator shaft. Both are linked through friction clutches to the main drive shaft which is driven continuously by the electric motor. Power for the keyboard is derived from the translator camshaft which also operates the multi-contact transmitter unit.

## 3. UNIT FUNCTIONS

### Electromagnet

This is a miniature polarised electromagnet of conventional design with a side-stable vertically-pivoted armature which executes a series of movements between its marking and

spacing stops for each incoming character. A pair of centralising springs is linked to the armature for double-current operation to reduce the side-stable forces and increase the magnets, sensitivity. For single-current operation a second pair of springs is connected to the armature and tensioned so as to bias the armature against the spacing stop during 'no current' elements of incoming signals. The frame on which the single-current springs are carried can be moved manually to vary the degree of mechanical bias on the armature.

The first mark-to-space transit of the armature has two simultaneous effects: it trips the motor switch so starting the motor, and it releases the selector unit clutch allowing the selector camshaft to make a single revolution.

### Selector Unit

The main function of the selector unit is to convert the incoming signal combination into a static setting on one or other of two sets of five pins (item X, inset, Fig.7.16) located in the translator unit. The selector unit consists primarily of a striking mechanism for these pins, together with a means of traversing this striking mechanism along the line of pins. Both mechanisms are driven by cams on the selector camshaft. An interposer controlled by the receiving electromagnet can block the striking action and so prevent a particular pin from being set.

If the first code element is a mark the interposer (a hook mounted on block CU, Fig.7.20) permits the striker to push the first pin inwards where it is retained by a spring. If the signal is a space, however, the interposer will block the forward movement of the striker and so prevent the pin from being set. While the striker is moving across to take up position in front of the next pin, the next code element is being received and the decision as to whether it is a mark or space is taken. After the fifth code element has been registered, a trip linkage operated from the selector shaft retention lever releases the translator camshaft.

Other mechanisms carried on the selector unit include

(a) the greater part of the automatic motor switch operating mechanism,

(b) a device used on single-current working for automatically disengaging the electromagnet from the selector, and

(c) an orientation device by means of which the selection instant can be varied by ±70% of a code element length.

For dual-speed machines the selector unit can also incorporate a manually-operated two-speed gear-box.

A time delay device comprising crawler clutch BA, Fig.7.19, is linked to the translator unit lag weight mechanism by shaft AT. These parts, whose operation is outlined below in the section headed 'Translator Unit', act to hold the send-receive switch tongue in the send position if the keyboard operator is transmitting at a speed approaching that of cadence speed, and also to delay the return of the switch tongue to receive by at least 20 milliseconds after the last character has been transmitted.

### Translator Unit

The main function of the translator unit is to examine the code setting created at the pin-box by the traversing pecker controlled from the selector unit, and then to convey the result of this examination to the aggregate motion unit which decides on the basis of this information which of the types in the typehead will be impressed on the paper.

Simultaneously with the examination of the pin-box setting on behalf of the aggregate motion unit, another examination of the pin-box is taking place to establish whether the particular code setting corresponds to any of the non-printing functions such as 'carriage return'. If this second inspection shows the code to be a functional one the printing and feeding actions are automatically inhibited, and the appropriate function is carried out. The typehead is of course positioned for every incoming character, but in the case of non-printing functions a blank type is brought round to face the paper.

The following mechanisms also form part of the translator unit

(a) linkages to operate the non-printing functions such as 'carriage return', and also prevent the typehead feeding or printing on receipt of the 'all space' combination,

(b) the transmitter contact bank, including the send-receive switch,

(c) the case shift control mechanism,

(d) the lag weight mechanism, and

(e) the cam which provides the power to reset the keyboard combination bars and to drive the operation counter.

The translator unit also provides power and controls for the reperforating attachment and the tape reader attachment, if fitted.

The lag weight mechanism referred to in paragraph (d) above is rendered necessary because the same 130 ms revolution time camshaft is employed to drive both the transmitting and the receiving sections of the machine. With a conventional teleprinter there are separate drive shafts for transmission and for reception, the receiving shaft being driven faster (130 ms cycle time) than the transmitter (150 ms cycle time) to maintain synchronism with the distant station. If this synchronism is to be maintained in a similar manner with the Model Seventy-five Teleprinter, the stop signal, which would otherwise be only 10 ms long, must be lengthened by a device which operates independently of the translator shaft. This is done by introducing a time delay of some 20 ms between the depression of any key on the keyboard, and the subsequent release of the translator clutch.

When a key is depressed the pivoted lag weight assembly (DJ and DH, Fig.7.17) is released and turns clockwise under the action of its spring. After a pre-determined time delay (20 ms at 50 bauds) which depends upon the inertia of the weight and the tension of the spring, the lag weight assembly reaches the limit of its clockwise motion and there releases the translator shaft clutch. The lag weight is then slowly returned to its original position by a cam on the translator shaft, taking 130 ms to do so. If another key depression occurs before 130 ms have elapsed, the returning lag weight will find its retaining latch already withdrawn by the depression of this key. The weight will now be controlled solely by the contour of its slow reset cam which, have returned the weight to its original position, drops sharply away so allowing the lag weight to rotate and after the 20 ms delay, release the translator shaft again. It can now be seen that however quickly the operator depresses a particular sequence of keys a 20 ms delay will be added to the natural 130 ms cycle time of the transmission mechanism by the inertia of the lag weight mechanism.

Now that the cycle time of the translator shaft has in effect been extended, all that is now necessary to do is to ensure that the send-receive switch remains set to send for the full 150 ms period required for 7½ unit, 50 baud transmission. Since the send-receive switch itself is controlled by an arm forming part of the lag weight assembly, if other arrangements were not made the tongue of the switch would return to receive at the same time as the lag weight was reset and so mutilate the stop signal by clipping it short.

The crawler clutch referred to in the last paragraph of the Selector Unit section above enables the send-receive switch to be moved from receive to send by the lag weight within 20 ms of the operation of the keyboard, but in the reverse send-to-receive direction the crawler clutch, which is driven direct from the motor, will maintain the tongue in the send position until at least 20 ms after the translator shaft has come to rest. This delay will thus extend the stop signal already established some 10 ms before the shaft came to rest until, under the normal keyboard operating conditions, the next key is depressed. If no further keys are operated the send-receive switch tongue will slowly move back to receive after the translator shaft has come to rest and take some 80 ms to do so.

### Aggregate Motion Mechanism

This mechanism is located on the main base between the translator unit and the spring drum unit. It consists of two similar but independent arrangements of links and rods which

act together so as to control the lift and rotation of the typehead and so bring the selected type round to face the paper. Both mechanisms are illustrated in simplified form on Fig. 1.6.

The **vertical movement** of the typehead is under the dual control of a pre-set case shift mechanism, and of linkages associated with element No.2 of the code combination created on the translator unit pin-box by the incoming signals. These two elements acting together cause the typehead to be positioned so that one of its four layers of types is brought up to the printing point.

The components concerned include rack A, idler gear B, gear C fixed to splined shaft D, gear E and rack F, links G, H, J and KT, and rods L and M. The two rods L and M are controlled by individual operating levers of which lever N is typical. Levers N are in turn operated by cams carried on the translator shaft P. Spring O, acting through links H and J, urges rods L and M to the right so holding levers N on their cams.

In the rest position of shaft P the operating levers N are at their maximum lift, and rods L and M are consequently at the limit of their movement to the left. The position which floating pivot Q now takes up corresponds to the top layer of types on the typehead being in line with the printing point. When shaft P is released at the end of the selection cycle, the levers N attempt to turn under the action of spring O. Whether they are in fact able to do so depends on the position of case shift latch R and of the selecting pin associated with element 2 of the incoming code combination (this pin is not illustrated here, but shown at X and Y on Fig. 7.16). If latch R is in the 'figures' position (as illustrated) and selecting pin No.2 is at space, both levers N will rotate and rods L and M will both move to the right. If latch R is in the 'letters' position (i.e. blocking the path of lever N), and pin No.2 is at space, only rod M will move and link KT will turn counter-clockwise around what has now become a fixed pivot at the end of rod L. The reverse of this action takes place if rod M is blocked and rod L is free to move.

The purpose of linkages KT, J, H and G is to combine the movements of rods L and M into a single movement of rack A. Since pivot Q is sited on link KT so that length K:T:: 2:1 and since the range of movement of shift rod L and code No.2 rod M is the same, there will be four possible positions of pivot Q disposed equally as shown in Fig. 1.2.

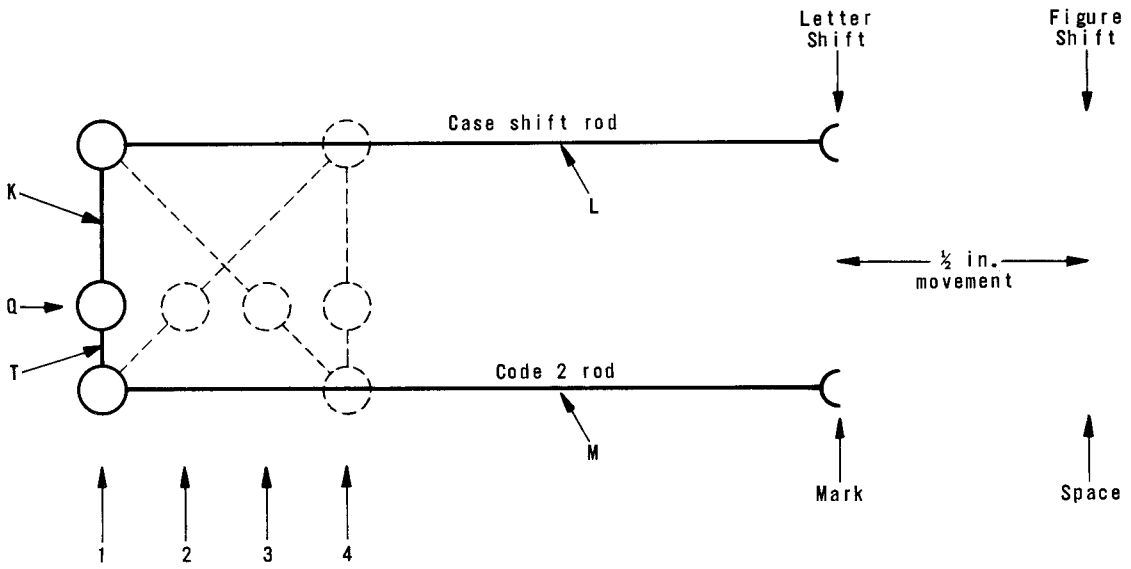


Fig. 1.2 AGGREGATE MOTION—LIFT LINKAGES

The positions of pivot Q correspond to four degrees of lift at rack F and it is this motion which is used to bring the required layer of types up to the printing level. The effects of the various movements of the shift rod L and code 2 rod M are summarised in Fig. 1.3 below.

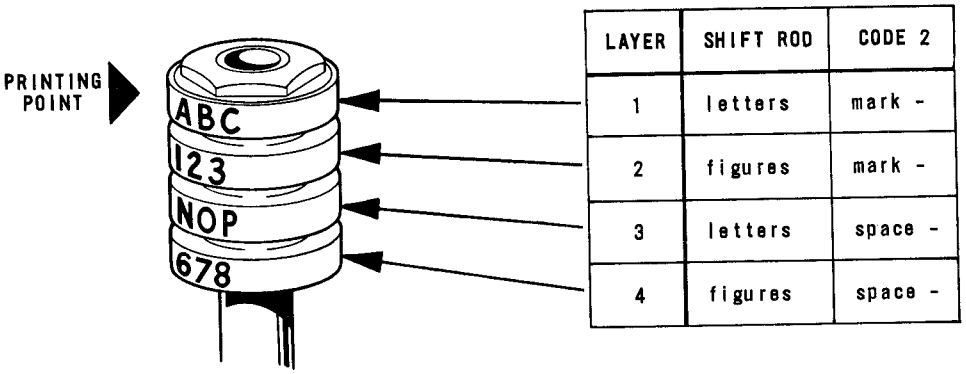


Fig. 1.3 TYPEHEAD — LAYER SELECTION

The rotating movement of the typehead is controlled by another arrangement of links similar to the one used for the selection of the type layers. It consists of four operating levers U with their associated cams on shaft P, the four selecting pins for code elements 1, 3, 4 and 5 (element 2 was used to control lift), links V, W, X and Y, links AA, AB, and AC connected via AD to AE, rack AF and splined shaft AG linked by bevel gears to the vertical splined shaft AH which controls the rotation of the typehead. The bevel gear associated with splined shaft AG, and spur gear E associated with splined shaft D are of course free to slide along their respective shafts as the typehead traverses the printing line.

The cams on shaft P that control the rods associated with code elements 1, 3 and 4 each produce a half-inch left-to-right movement when a space setting is read off the selecting pins. The cam associated with rod Y differs from the others in that it gives only a quarter-inch movement when a space is registered on pin 5.

Since each of these four rods associated with typehead rotation can have marking (i.e. blocked) or spacing (i.e. free to move) actions there are sixteen possible positions all of which combine at lever AE. Rack AF and splined shafts AG and AH convey the setting on lever AE, converting it in so doing into clockwise or counter-clockwise rotation of the typehead so bringing one of the sixteen types on a particular layer round to the printing point.

The direction and degree of movement that each of these rods can impart to the typehead is set out in Table 1 below. In this table, and in the explanation that follows, a clockwise rotation is considered as being positive, and a counter-clockwise rotation is considered negative.

Table I

| Code | Movement on space | Typehead rotation | Degree of movement |
|---|---|---|---|
| 1 | ½ in. | CW | +4 characters |
| 3 | ½ in. | CCW | -8 |
| 4 | ½ in. | CW | +2 |
| 5 | ¼ in. | CW | +1 |

CW = clockwise CCW = counter-clockwise

Reference to Fig. 1.6 will show that it is only on spacing elements of the code that the control rods V, M, W, X and Y can move to the right. Consider, for example, the combination for letter 'B' which is mark, space, space, mark, mark. Element No. 2 can be disregarded in this context as it is associated with the lift operation, and so also can

elements 1, 4 and 5 as they are marks and consequently do not permit their associated control rods to move. The only effective element from the rotational point of view is therefore the space on No. 3. Table 1 above shows that a half-inch movement on this rod will produce a counter-clockwise rotation equivalent to eight radial positions on the typehead.

Fig. 1.4 below shows that the position in which the letter 'B' is located is 180 degrees from the printing point. The 'minus 8' movement brought about by the half-inch left-to-right movement of rod M has now therefore brought letter 'B' round to face the paper.

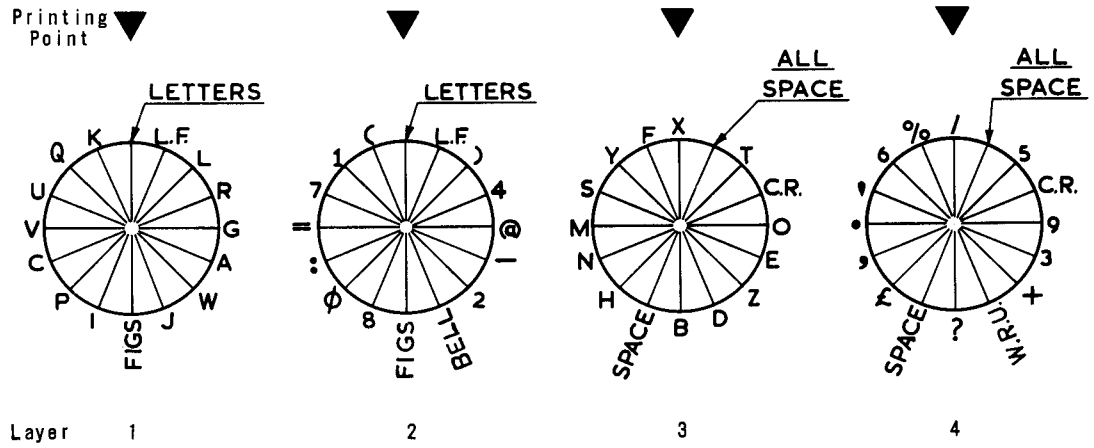


Fig. 1.4 TYPEHEAD — LAYER ARRANGEMENT (C.C.I.T.T. NO.2)

When more than one spacing element occurs among elements 1, 3, 4 and 5 of a particular code combination, the subsequent movement of the typehead can be determined by taking the algebraic sum of the individual effects of the 'spacing' control rods concerned.

As an example consider the code for letter 'Z' which is mark, space, space, space, mark. Disregard element 2 and all the marks. Element 3 and element 4 are spaces and cause -8 and +2 movements respectively. The algebraic sum of these two movements is -6. Reference to the typehead layout chart above will now show that a counter-clockwise rotation of 6 type positions magnitude will bring the letter 'Z' round to the printing point.

Although the vertical and rotational movements of the typehead have been described separately, they are produced by the same camshaft (P, Fig. 1.6) and therefore occur together. The combined effects of both the lift and rotation mechanisms can be assessed by combining the information given in Tables 2 and 3 which are based on the C.C.I.T.T. International Telegraph Alphabet No. 2.

Table 2

| Code -2--- | Shift | Typehead lift (in layers) | Layer brought up to printing point |
|---|---|---|---|
| -M--- | letters | 0 | 1 |
| -M--- | figures | 1 | 2 |
| -S--- | letters | 2 | 3 |
| -S--- | figures | 3 | 4 |

Table 3

| Code 1-345 | Typehead movement in characters | Character brought to printing point | | | |
|---|---|---|---|---|---|
| | layer → | 1 | 2 | 3 | 4 |
| m-mmm | 0 CW | ltrs | ltrs | X | / |
| m-mms | 1 CW | K | ( | F | % |
| m-msm | 2 CW | Q | 1 | Y | 6 |
| m-mss | 3 CW | U | 7 | S | ‘ |
| s-mmm | 4 CW | V | = | M | . |
| s-mms | 5 CW | C | : | N | ’ |
| s-msm | 6 CW | P | 0 | H | £ |
| s-mss | 7 CW | I | 8 | space | space |
| m-smm | 8 CCW | figs | figs | B | 7 |
| m-sms | 7 CCW | J | bell | D | WRU |
| m-ssm | 6 CCW | W | 2 | Z | + |
| m-sss | 5 CCW | A | - | E | 3 |
| s-smm | 4 CCW | G | @ | 0 | 9 |
| s-sms | 3 CCW | R | 4 | car ret | car ret |
| s-ssm | 2 CCW | L | ) | T | 5 |
| s-sss | 1 CCW | line feed | line feed | all space | all space |

* Type positions indicated by the ... are blank, as they correspond to non-printing functional codes.

## Keyboard and Transmission

For transmission the machine can be fitted with a keyboard for mechanically selecting the 5-unit code appropriate to the depressed key, and a transmitter for converting this code selection into a sequence of five pulses to which are automatically added the start and stop signals before the complete sequence is transmitted to line via the send-receive switch.

An original feature of this type of keyboard – referred to as the K-type – is that it has no separate transmitter or transmit camshaft associated with it, but employs the receive camshaft to drive a multi-contact transmitter located above the translator unit.

The Keyboard unit illustrated in Fig.7.32 consists of an arrangement of keybars S pivoted above and at right angles to a group of five combination bars carried in assembly Q. Each combination bar is urged to the right by a spring, but held at rest on a latch assembly common to all five bars. This latch is released by the depression of any key so allowing the combination bars, which have a series of irregularly-disposed square teeth along their upper edges, to slide to the right.

Combination bars required to set up a **space** condition are prevented from moving by one of their teeth engaging the left-hand side of the selected key. A **mark** combination bar, on the other hand, does not have a tooth at the point immediately preceding the selected keybar and can, therefore, slide to the right. This sliding movement operates a bellcrank linked to one of the six vertical rods FT, Fig.7.34.

Linkages shown at B, Fig.7.1, convey the movement of these vertical rods to the translator unit pin-box and cause the associated pin to be pushed inwards to record a mark condition. The front vertical rod is pushed up by a trip bar whenever any key

is depressed, and it is the movement of this rod which releases the lag weight and thus the translator shaft clutch.

The code setting established on the translator unit pin-box is then sensed by levers BS, Fig.7.16, and it is the blocked or free movements of the associated levers CA which determine the mark or space condition on the transmitter contact assembly B, C, D and E, Fig.7.37.

### Answer-Back

The location of the answer-back unit, which is an optional facility that can be fitted to both transmitter-receiver and receiver-only machines is shown in Fig.1.5. This unit takes no part in the operation of the machine until activated by an incoming Who-are-You? signal. It then automatically signals the call sign of the home station back to the enquiring machine, so assuring the calling operator that he is connected to the correct station and that it is operating correctly. The facility can also be used to obtain a form of receipt for a message sent to an unattended machine.

The answer-back unit has capacity for up to 20 printing or functional characters, generally allocated as follows: CARRIAGE RETURN, LINE FEED, LETTER OR FIGURE SHIFT, up to 14 letters or figures comprising the station call sign, CARRIAGE RETURN, LINE FEED, LETTER SHIFT. The individual characters are generated from the interchangeable contoured coding elements shown at M, Fig.7.36, (referred to as 'wards') which are carried on a drum L which is ratchet fed from the translator unit. The drum is rotated so as to present each ward in turn to a series of sensing levers AH which take over control of the transmission mechanism at a point adjacent to rods FT, Fig.7.34, and simulate the movements of these rods so as to set up on the translator pin-box the combination dictated by the contour of the ward. The answer-back unit then automatically releases the main translator shaft which subsequently revolves once to transmit the character to line. The answer-back then repeats this sequence a further 19 times to transmit the remainder of the call sign to line, before coming to rest and relinquishing its control of the translator mechanism to the keyboard. A table giving a list of the various wards available is given on page 75 of Part 7.

The local answer-back unit can also be brought into operation by depressing the 'Here Is' key on the keyboard. The unit then transmits the home station call sign and comes to rest. The 'Here Is' key is linked directly to the answer-back trip mechanism and does not transmit a character to line.

### Reperforating Attachment

This optional attachment can record incoming and outgoing messages on an 11/16 in. wide paper tape, simultaneously with the production of the equivalent page copy. The perforated tape forms a permanent record of all the code signals involved in a particular message in a form suitable for storage and for subsequent retransmission by a tape reader. The mechanical local record facility of the Model Seventy-five machine enables it, when fitted with this Attachment, to function as a keyboard perforator and also to produce a printed check copy of the material perforated in the tape, without it being necessary to provide a signalling battery.

The reperforating attachment employs a fixed punch block beneath which code selecting bars operated from the translator unit are positioned in accordance with the code combination registered on the pin-box. Once these selecting bars have been positioned they are lifted by a punching arm driven from an eccentric block carried on the translator shaft. Marking selecting bars now engage their associated punches to drive them through the paper tape; spacing bars are withdrawn clear of their punches which therefore remain at rest. The return stroke of the punching arm provides power to withdraw marking punches from the paper, and also to operate the ratchet which drives the tape feed mechanism.

## 4. INTERNAL CIRCUITS

The internal signals wiring of the Model Seventy-five Teleprinter is shown in Fig.1.7.

The receiving electromagnet consists of two 110 ohm coils which are wired in series and have a combined inductance of 4½ henries measured at 50 cps, 40 mA. The leads from

the electromagnet are taken to terminals 1 and 4 of terminal block TB1 and thence to line via pins J and G on the 12-way signals plug.

Operating currents and voltages are 120V, 40 mA for single-current circuits, and +80V, 0, -80V, 20 mA for double-current circuits if 2 kilohms of the current limiting resistance is shunted by a 2 $\mu$F capacitor. Without this capacitor the current must be at least 25 mA.

The mark, tongue, and space code contacts are wired individually via plug G back to terminal block TB3 (located beneath the main base) whose straps link the tongues to the associated moving element in the sequential contact bank. The fixed contacts in the sequential bank are commoned at the transmitter and go to line on pin B of the 12-way signals plug L via terminal block TB4 and the RIS unit. The send-receive switch is linked to terminal block TB4 via plug G and goes to line on pins F, D, and E for send-receive and tongue respectively.

Fig. 1.7 shows the code contacts 1, 2, 3, 4 and 5 in the position which they take up when the translator shaft is at rest. All the tongues are resting on their spacing side and are electrically connected via straps on terminal block TB3 to the moving blades of the associated sequential contacts. The space code contacts (the lower ones on Fig. 1.7) are in parallel with each other and with the moving blade of the start contact; the mark code contacts (the upper ones on Fig. 1.7) are similarly in parallel with each other and with the moving blade of the stop contact which is always made at rest.

Shortly after the translator camshaft starts to rotate, the five moving blades of the code contact bank move to the mark contacts and then either return to space or remain at mark depending upon the code combination established on the selecting pins. This action takes place while the initial stop and start signals are being transmitted. The code contacts them remain in the positions to which they have been set for the remainder of the cycle, during which other cams on the translator shaft operate the sequential contacts. Marking code contacts are finally returned to the rest spacing position about 2 ms after the translator shaft comes to rest.

It is important with double-current circuits to ensure that the transmitter sequential contacts are adjusted so that there is a short interval between the opening of each contact and the closing of the next. If this is not done, it is likely that the signalling supply will be momentarily short-circuited during transmission. Although this momentary condition is unlikely to damage the supply it may result in the transmission of a code combination that has been mutilated by the discharge of smoothing capacitors in the signalling rectifier set. A protection lamp in each leg of the signalling supply will safeguard the supply and slow down the discharge of any capacitors.

## 5. EXTERNAL CIRCUITS

### General

When external circuits for the Model Seventy-five Teleprinter are being designed or modified the following special features of the machine should be considered.

(a) Since the contacts of the transmitter are driven from cams carried on the main translator camshaft, and read off the code combination direct from the code selecting pin-box, these contacts are operating **while the machine is receiving** as well as while it is transmitting. It is therefore necessary to inhibit the transmitter electrically during reception to prevent re-transmission of received signals.

(b) **As a mechanical local record is always present** when the Model Seventy-five is transmitting, whatever local record circuitry was required previously must be disconnected when a Model Seventy-five is installed. With a conventional double-current switched simplex circuit, for example, this can be done by simply omitting the leak resistor, but with single-current loop circuits that have two or more transmitters and electromagnets in series, the electrical local record cannot be dispensed with so easily as the line current passes through every electromagnet in the circuit.

To cater for these single-current applications all standard Model Seventy-five machines are fitted with an armature throw-out facility which can be adjusted so that the trip action from the keyboard to the translator unit will automatically disconnect the electromagnet armature from the selector unit before the combination for the selected key can be transmitted. The electromagnet can now respond to the signals transmitted through it, but the movement of its armature will not be conveyed to the selector. The armature is automatically reconnected to the selector within 130 ms of the end of the transmission. This armature throw-out facility is of course normally adjusted to an inoperative position for double-current applications.

(c) The implications of this mechanical local record feature should also be considered when a fault has to be located. With the Model Seventy-five an accurate local copy is not necessarily proof of accurate transmission. The mechanical local record feature also precludes the use of duplex circuits.

(d) The armature throw-out mechanism mentioned in paragraph (b) above also controls the send-receive switch. The tongue of this switch moves to send immediately a key is depressed, i.e. before the start signal is transmitted, and returns **slowly** to receive after the end of the stop signal. This delayed return of the send-receive switch tongue to receive, unlike the armature throw-out facility, **cannot** be made inoperative.

The effect of this slow return feature on a switched simplex circuit should not be overlooked. If on a one-wire circuit of this kind the transmitting operator maintains a keyboard speed which closely approaches cadence speed, the send-receive switch will remain in the send position until either the operator reduces speed or the transmission ends. Because of this continuous send condition it is not possible for the distance station to break in on the home station's transmission.

(e) A mechanism is provided to protect the machine from damage that could occur if an operator attempts to break in on an incoming message by operating his keyboard. The danger occurs when the local operator releases the local translator unit by operating the keyboard at the instant when his selector unit is in the act of setting up a marking combination in the pin-box. The subsequent traversing movement of the pin-box which occurs at the very beginning of the translation cycle could cause the pecker to be trapped against the side of an adjacent selecting pin which happened to be in the space position.

This combination of circumstances is guarded against by a **break-in mechanism** which will automatically set the selecting unit retention hook (part of item CU, Fig.7.20), up to the space position and hold it there until the crawler clutch resets. Although this mechanism will not prevent the release of the translator unit while the selector unit is responding to incoming messages, it does prevent the pecker striking forward and so eliminates the possibility of a foul between it and a spacing selecting pin in the traversing pin-box.

The components involved in this protection device are shown at U, Fig.7.19, and at ER, ES and ET on Fig.7.21. It is an extension arm riveted to the pivot of the lag weight assembly DH, Fig.7.17, acting on the underside of the horizontal arm of item ER, Fig.7.21, which pivots trip shaft AT, Fig.7.19, counter-clockwise. The inside edge of cam ET, Fig.7.21, treads on extension arm U, Fig.7.19, so lifting the forked arm T and hence the retention hook to the spacing position.

(f) The electromagnet armature is fitted with a pair of centralising springs that increase the sensitivity of the electromagnet by reducing the changeover force and reducing the impact on the stops which limit the movement of the armature. The anchor points for these springs are on an adjustable plate which is positioned so as to produce a neutral bias on the armature. A second pair of springs is connected to the armature for single-current applications. These are anchored on an adjustable carrier which is set manually to produce the required degree of mechanical bias. For double-current working, this second pair of springs is disconnected at the armature end and left hanging from the carrier.

(g) The transmitter contacts are adjusted differently for single- and for double-current working. To eliminate bias distortion on single-current circuits the closing times of the sequential contacts should be adjusted so that one closing time begins just when the preceeding one ends. In practice, these single-current closing times are often adjusted to overlap slightly to ensure that there will be no breaks in á block signal.

For double-current applications the closing times are adjusted so there is a distinct break between the opening of one contact and the closing of the next. If this were not done, the signalling supply may be momentarily short-circuited. While a short-circuit of this duration is unlikely to damage the supply, it may cause a character to be corrupted by the discharge of smoothing capacitors in the signalling rectifier. It is good practice to include a protection lamp in each side of the signalling supply. This will not only protect the supply and the transmitter contacts but also reduce the chances of a corrupted signal by slowing up the discharge of the smoothing capacitors.

### Single-Current Operation

The external wiring for a typical single-current loop circuit employing 120V, 40 mA signalling is shown in Fig. 1.11.

The electromagnet must be mechanically biased to space and the armature throw-out mechanism adjusted to the operating position so as to prevent the electromagnet from tripping the selector unit, and so corrupting the mechanical local record.

The send-receive switch is used to prevent received signals from being re-transmitted along the send leg of the circuit. Its tongue and receive contacts are connected across the transmitter and the send contact disconnected. Thus although the received signals are continuously reproduced on the transmitter, none of the signals can affect the line circuit. Note too that the five space code contacts and the start contact are all left disconnected for single-current working.

The 0.5 $\mu$F + 330 ohm network wired to terminal block 1 should not be used on single-current circuits.

### Double-Current Operation

A typical double-current 2-wire simplex circuit is shown in Fig. 1.12, and a typical switched simplex circuit in Fig. 1.13. In both circuits the convention of negative battery to line for mark is used. No leak resistors are required as the local record is obtained mechanically.

In the 2-wire circuit in Fig. 1.12, the send-receive switch and transmitter contacts are interconnected so that, although during periods of reception the transmitting contacts are operating continuously, a nearly-continuous mark signal is transmitted to the distant electromagnet. This arrangement has been adopted to prevent the slow return of the send-receive switch in the send to receive direction from leaving the send line without a signal and so creating a possible half-tone condition on voice-frequency line equipment.

The 0.5$\mu$F + 330 ohm spark quench circuit can be used, if required, on these two double-current circuits.

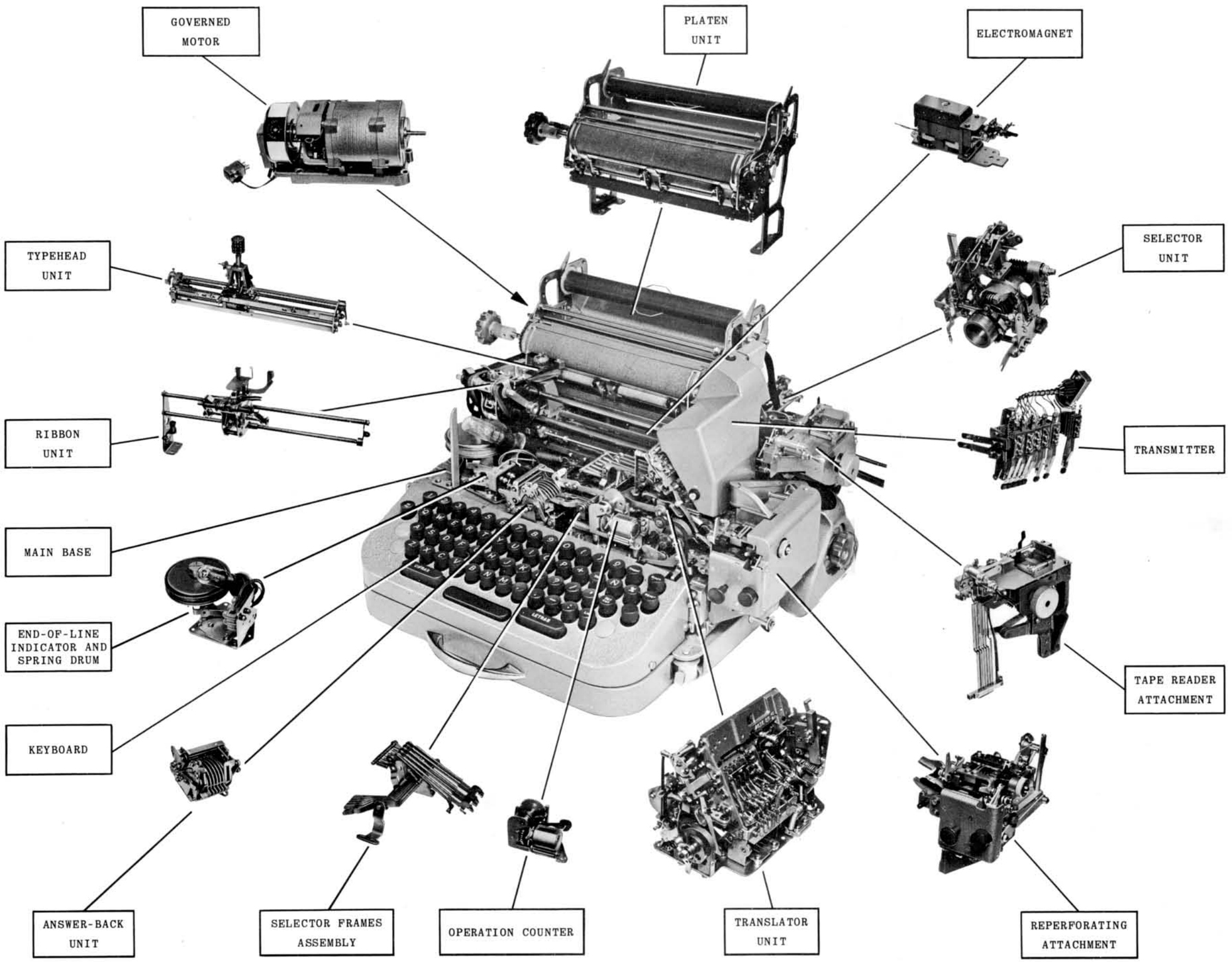


Fig. 1.5 UNIT IDENTIFICATION

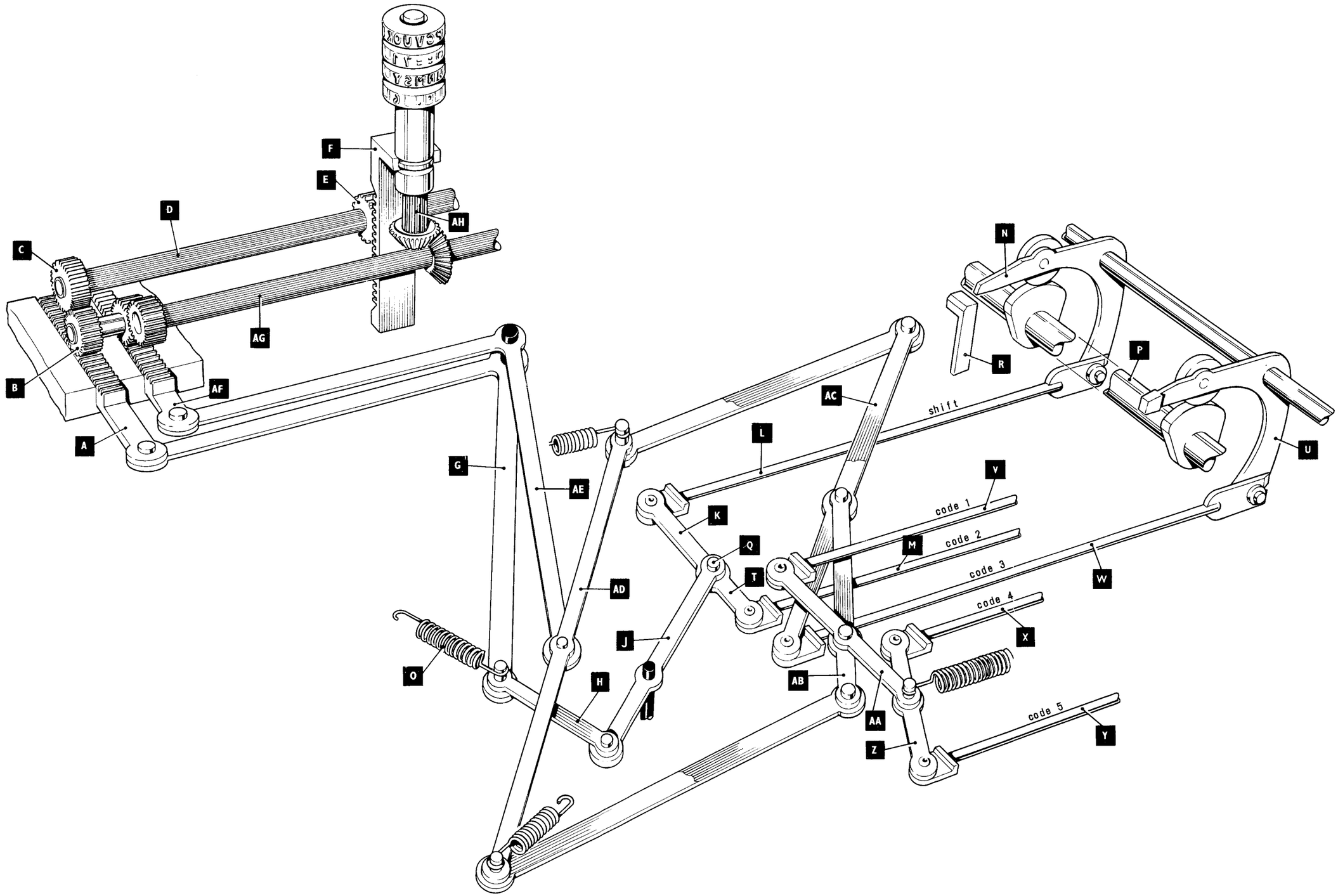


Fig. 1.6 AGGREGATE MOTION MECHANISM

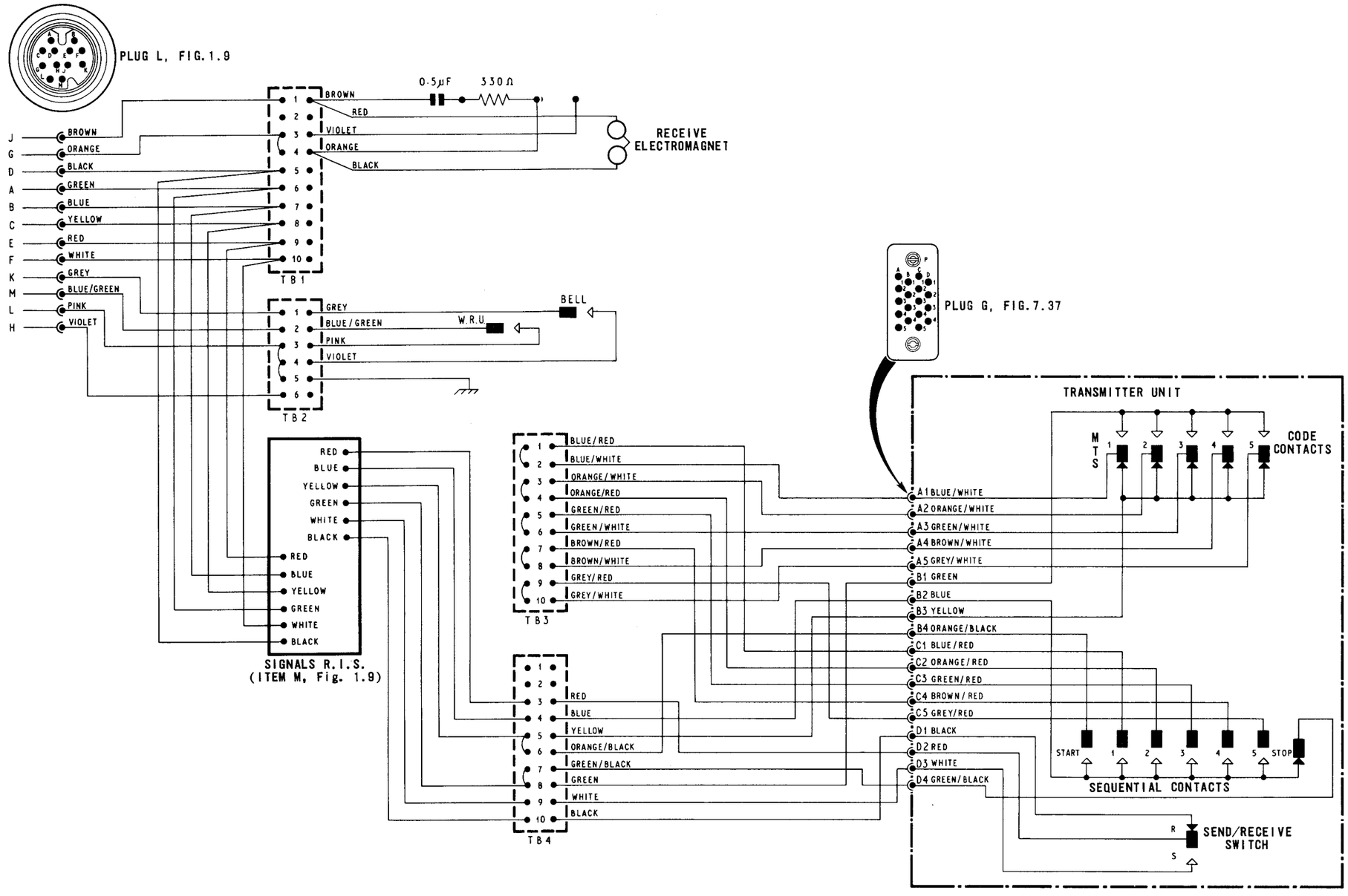


Fig. 1.7 TRANSMITTER-RECEIVER SIGNALS WIRING

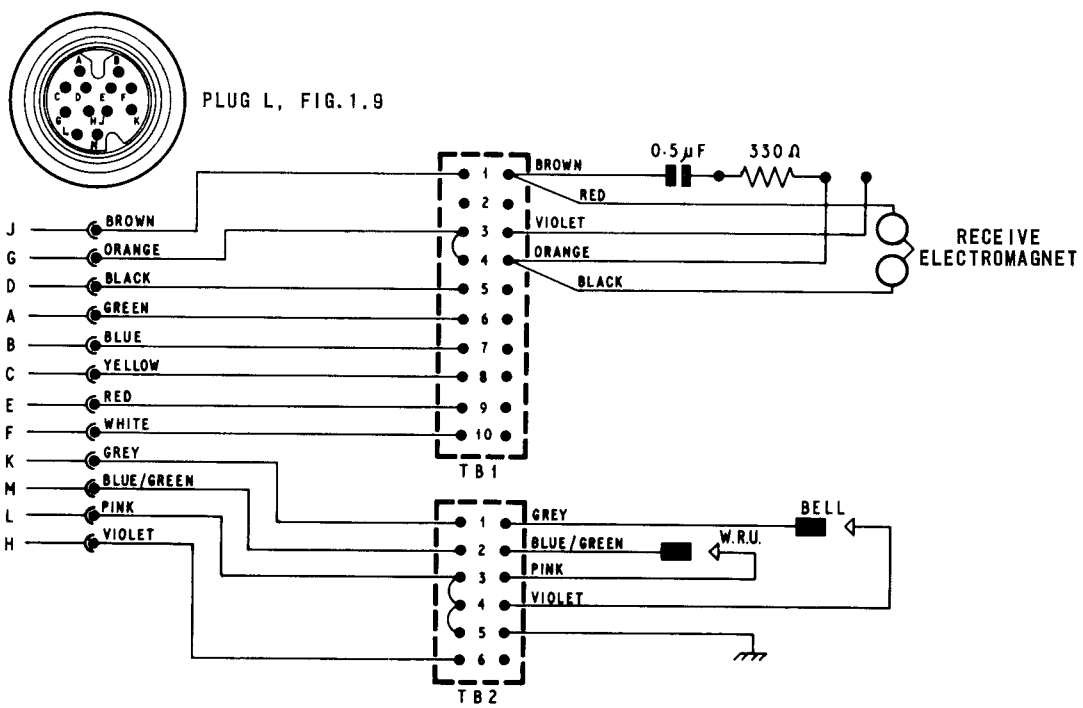


Fig. 1.8 RECEIVER-ONLY SIGNALS WIRING

**A** Tape Low Microswitch (Reperforating Attachment only)

**B** Anti-surge Fuse in motor circuit (For values see Figs. 7.9 and 7.11)

**C** Spark-quench capacitor 1 + 1 $\mu$F (see Fig. 1.10)

**D** Carriage-return dashpot

**E** Governor Contacts spark quench capacitor (see Fig. 1.10)

**F** Electromagnet base plate

**G** Electromagnet spark quench

**H** Frame earth connexion

**J** Signals radio interference suppression (R.I.S.) unit

**K** Automatic motor switch (see Fig. 1.10)

**L** 12-way Signals plug

**M** Motor R.I.S. Filter unit

**N** 3-way Motor power plug

**P** 4-way motor socket (see Fig. 1.10)

**MTB** Motor Terminal Block

**TB1** Electromagnet and transmitter R.I.S./line connexions

**TB2** Alarms

**TB3** Transmitter cross-connexions

**TB4** Transmitter/R.I.S. unit connexions

**TB5**, **TB6** Miscellaneous terminal blocks, generally fitted to machines modified for parallel input or output

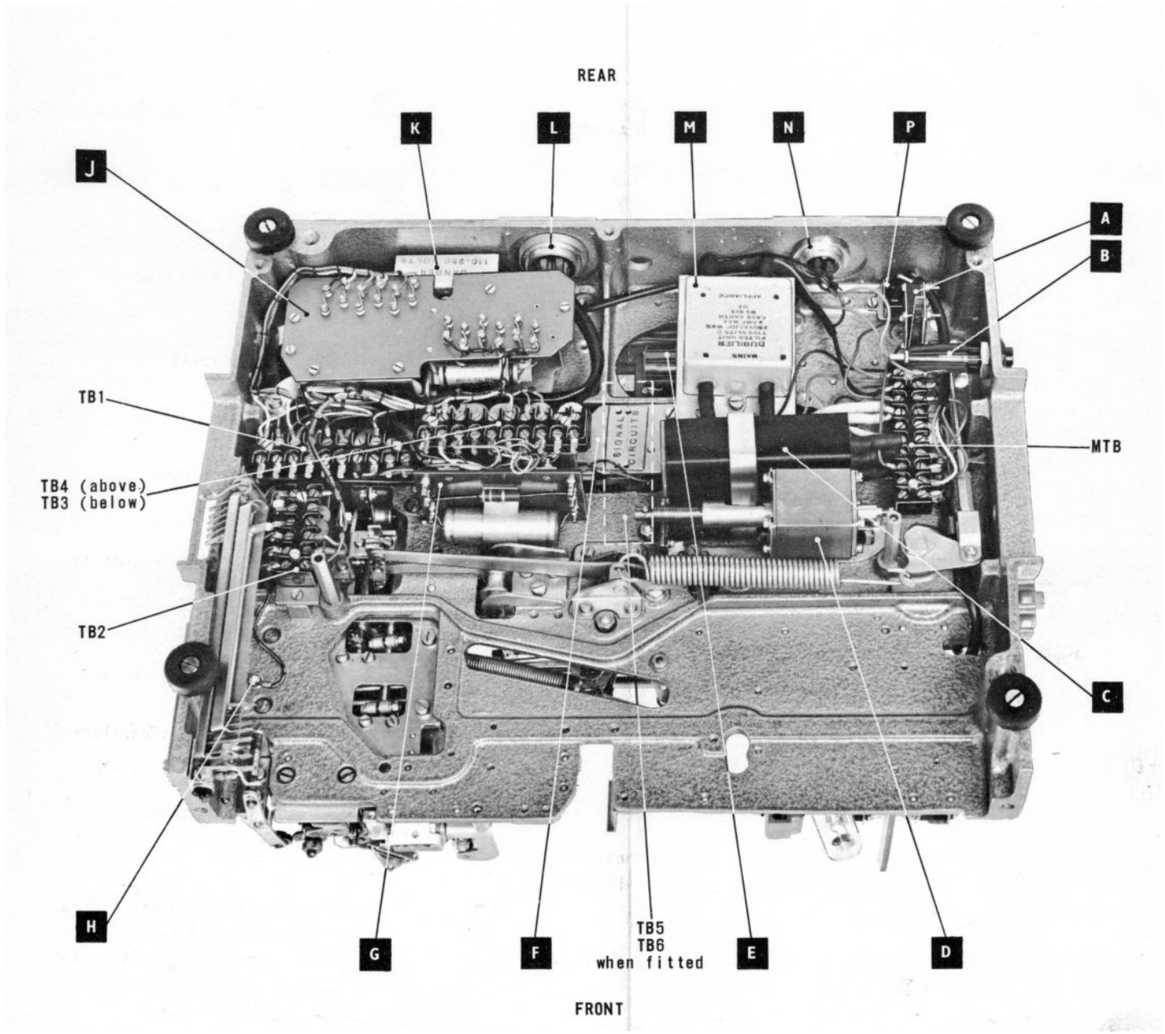


Fig. 1.9 COMPONENT LOCATION

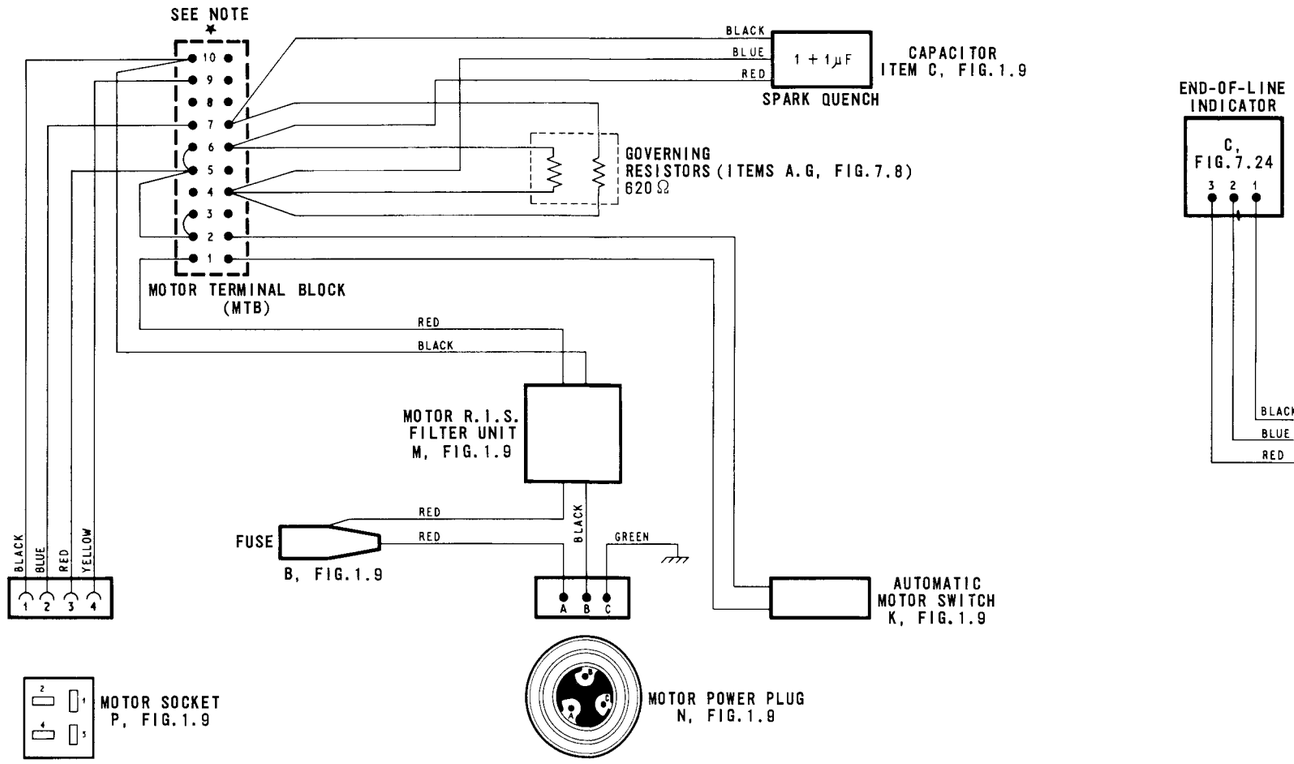


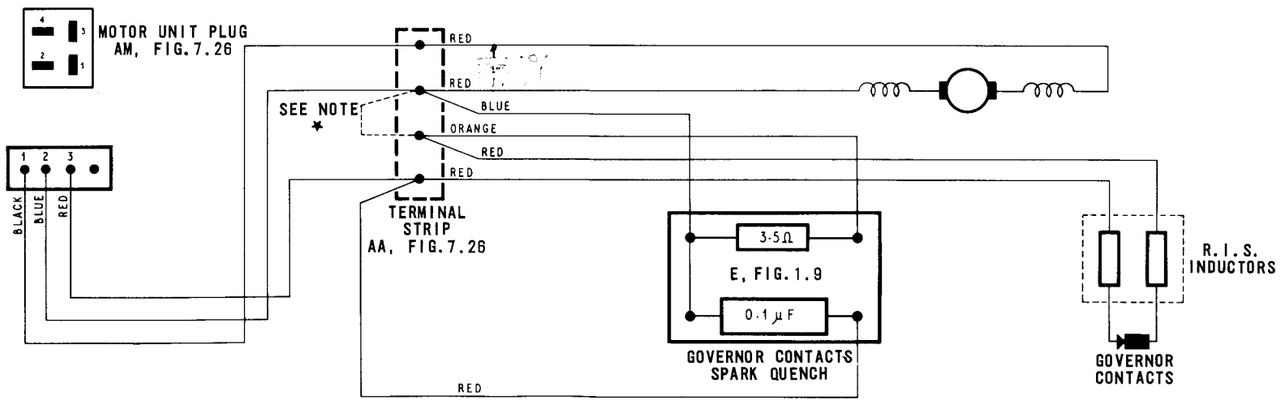


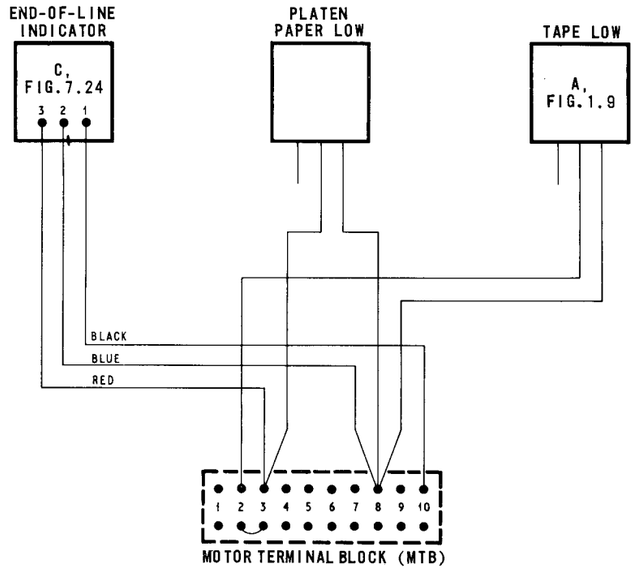


* This diagram shows the straps on the motor terminal block (MTB) and on the 4-way unnumbered terminal strip (item AA, FIG.7.26) as arranged for 220-230V AC operation.

For low voltage (100-125V) working, the governing resistors and capacitors should be arranged in parallel by modifying the straps on the blocks MTB and AA as follows.

MTB ☐ Remove strap between 5 and 6
☐ connect strap between 4 and 5
☐ " " " 6 and 7

AA ☐ By-pass the 3.5Ω resistor by strapping together the centre two contacts

Fig. 1.10 GOVERNED MOTOR WIRING

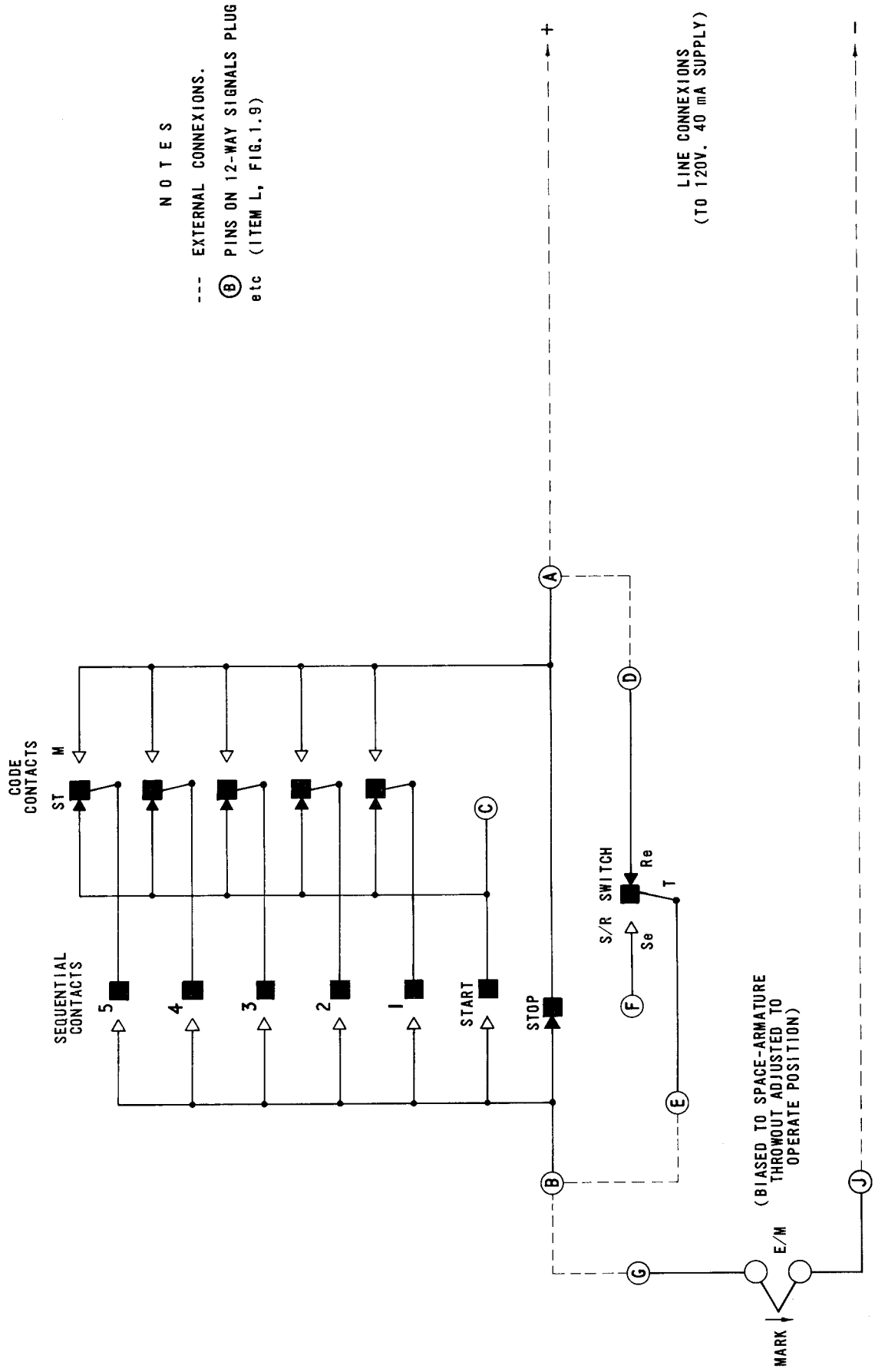


Fig. I.11 SINGLE-CURRENT LOOP CIRCUIT

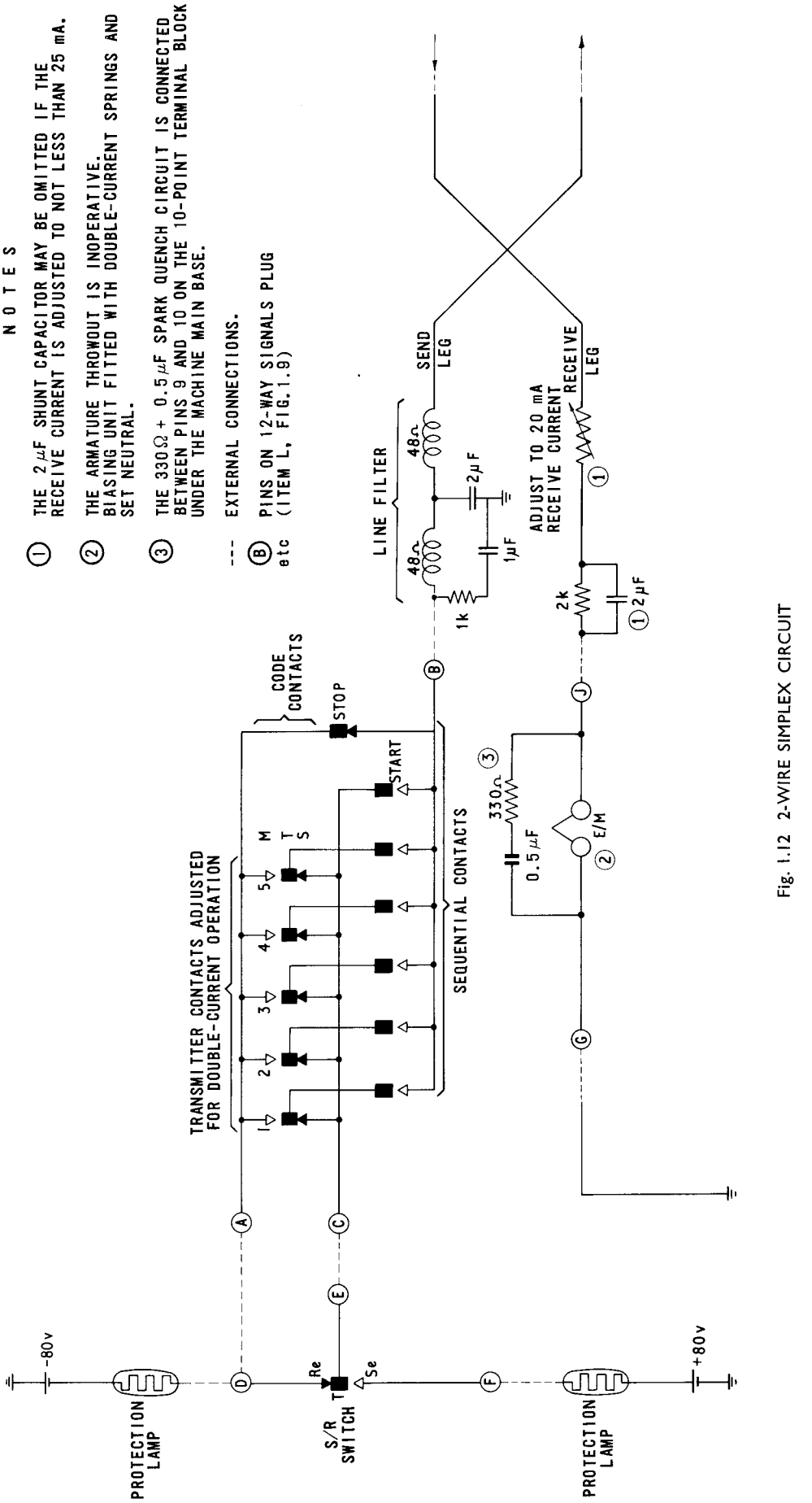


Fig. 1.12 2-WIRE SIMPLEX CIRCUIT

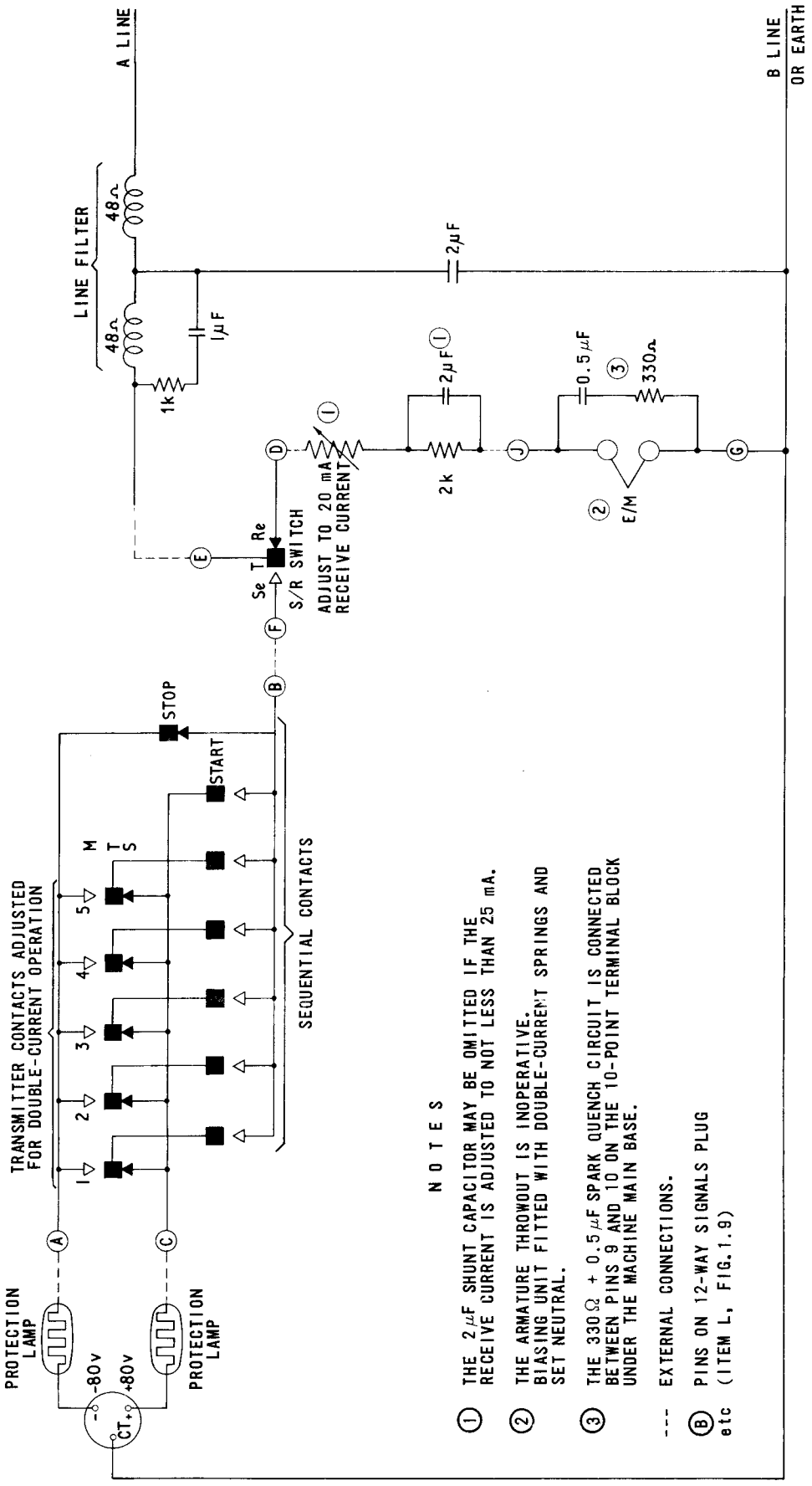


Fig. 1.13 SWITCHED SIMPLEX CIRCUIT

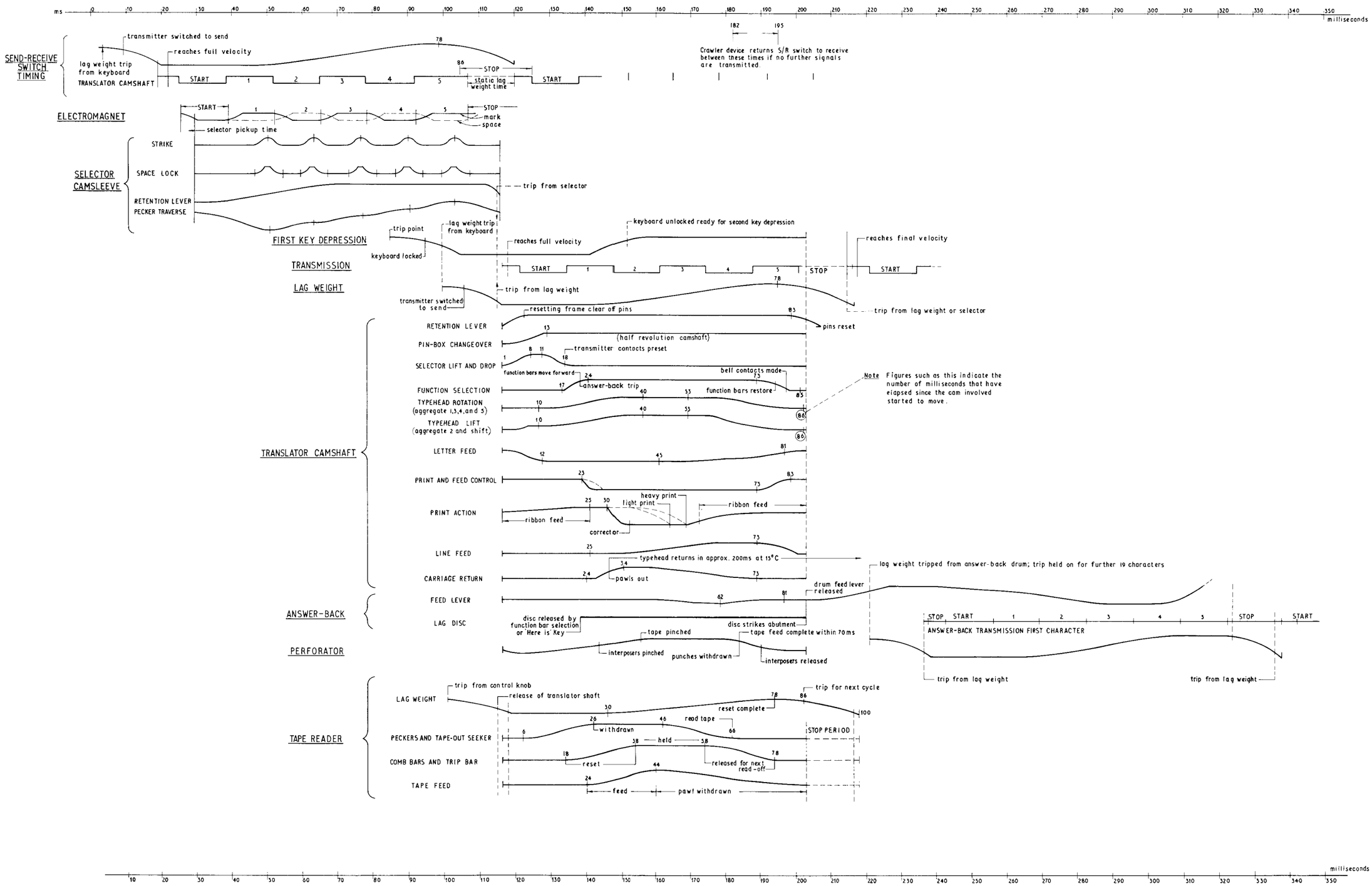


Fig. 1.14 MODEL SEVENTY-FIVE — TIMING DIAGRAM (75 BAUDS)

# PART 2

## CONTENTS


Page

SECTION A. INSTALLATION INSTRUCTIONS

1. Unpacking and pre-installation preparation . . . . . 1
2. Installing a double-current machine . . . . . 2
3. Installing a single-current machine . . . . . 4

SECTION B. OPERATION INSTRUCTIONS

1. Converting from single- to double-current operation . . . . . 7
2. Converting from double- to single-current operation . . . . . 8
3. Converting a dual-speed (45/50 baud) machine to 75-baud operation . . 8
4. Changing speed on a machine fitted with a gear-box . . . . . 10
5. Changing speed on a machine without a gear-box . . . . . 10

# LIST OF ILLUSTRATIONS

Fig. 2.1 12-way Plug and Socket Adaptor
Fig. 2.2 Selector Unit – Single-speed Model
Fig. 2.3 Electromagnet/Selector Unit Linkage
Fig. 2.4 Selector Unit fitted with a gear-box
Fig. 2.5 Speed-change Lever Positions

# PART 2

# A. INSTALLATION INSTRUCTIONS

## 1. UNPACKING AND PRE-INSTALLATION PREPARATION

1.1 Open the packing case in accordance with the instructions attached to the outside of the case. Further instructions on unpacking the machine, plugs and cables will be found inside the case.

1.2 Ensure that the table or stand on which the machine is to be operated is sufficiently strong and rigid to support its weight.

1.3 Certain components and assemblies on the machine have been secured by string, wire or padding to minimise the danger of damage occurring in transit. Where applicable, ensure that the following instructions are carried out before attempting to install the machine.

(a) Tear off the adhesive tapes securing the cover flaps and the rubber strip along the platen. Remove the rubber strip. Remove the four cover fixing screws and lift off the cover.

(b) Remove the string securing each end of the paper roll holder.

(c) Remove the wire or padding around the transmitter lag weight (see warning label attached).

(d) Remove the string securing the platen pressure roller release lever.

(e) Remove the wire securing the carriage return lever (see warning label attached).

(f) Remove the wire securing the pawls of the operation counter (see warning label attached).

(g) Remove the wires securing the answer-back feed pawl lever and the 'Here Is' trip lever (see warning label attached).

(h) Untie and remove the linen bags containing the spare motor brushes and gears.

(j) Fit the end-of-line indicator lamp into its socket.

(k) Remove the adhesive tape from the tape drawer handle and the adhesive tape securing the tape drawer to the keyboard mask.

(l) Turn the machine on its side, unscrew the four rubber feet and take off the two metal bracing strips. Refit the rubber feet. Stand the machine up again, pull out the tape drawer and untie both the tape low arm and the tape reel holder.

(m) Remove the adhesive tape securing the reperforator chad chute lid.

(n) Screw the platen winder knob on to the platen spindle.

1.4 Inspect the mechanism and ensure that no part(s) has been damaged or worked loose in transit.

1.5 If the ink ribbon is not already fitted, remove it from its container and load it in the manner recommended in the Model Seventy-five Operator's Handbook.

1.6 Inspect the mechanism and ensure that it is adequately lubricated. All machines are fully lubricated before leaving the factory but, if the machine has been stored for a long period before use, there is a possibility that some oil may have been lost. When installing a machine that has been in storage for over six months, carry out the Lubrication Instructions given in Part 3.

## 2. INSTALLING A DOUBLE-CURRENT MACHINE

2.1 Ensure that the machine is set up for double-current operation. A visual check that the electromagnet biasing springs are disconnected will normally be sufficient evidence of this condition. If in any doubt, however, carry out the conversion instructions given on page 7.

2.2 If the machine is a single-speed model supplied with a set of alternative motor gears, refer to the following table and check that the correct set of gears is fitted for the required operating speed. If necessary, change the gears as described in the instructions given on page 11, paragraphs 5.2 to 5.4.

| Baud Speed | Motor Pinion | Driven Gear | Colour Identification |
|---|---|---|---|
| 45 | GR 2199 | 4009/93A | Green |
| 50 | GR 2198 | 4009/94A | Yellow |
| 75 | GR 2201 | 4009/95A | Blue |

2.3 If the machine is fitted with a gear-box, check that both the speed- and gear-change levers are correctly set for the required operating speed. If necessary, reposition them in accordance with the instructions given on page 10.

2.4 Load the paper in the manner recommended in the Model Seventy-five Operator's Handbook.

2.5 Ensure that all parts of the mechanism are free to move without evidence of binding. Depress a printing key or, if no keyboard is fitted, set up a printing character in the pin-box and turn the machine by hand until the mechanism has passed through a complete cycle. Repeat this operation, inspecting the mechanism for smooth performance.

2.6 Unwrap the signal and motor cords and connect them to their respective chassis-mounted plugs at the rear of the machine main base. Push the connexions firmly home to ensure good contact and screw up the outer locking rings.

2.7 Ensure that the electrical connexions under the main base and in the signal cord are suited to the line circuit. Two typical circuits suitable for double-current operation are provided in Part 1, Figs. 1.12 and 1.13.

2.8 Ensure that the power supply corresponds to that specified on the motor. If it does not, refer to Part 1, Fig. 1.10, and carry out such corrections as may be necessary. Connect the motor cord to the supply. Check that the main base is now earthed. Switch on the power supply to the motor and check the motor speed in the manner recommended in Adjustment No. 81 (Part 4, page 60).

2.9 The machine may now be tested in 'local' before connecting the signal cord to the line circuit. During this test, check the operation of all printing characters and machine functions. Check that the length of the printing line is suitable for the circuit on which the machine is to be used and, if necessary, re-adjust the line length as recommended in Adjustment No. 88 (part 4, page 70). Check the operation of the end-of-line indicator and, if necessary, re-adjust this unit as described in Adjustment No. 113 (Part 4, page 90).

2.10 The machine is now ready for an operational test with a distant station. During this test, the line-up procedure described below should be carried out. Check also that the line current does not fall below 20 mA.

Double-current line-up procedure

(a) Connect the signal cord to line and ask the distant station to transmit 'Y' (MSMSM) continuously. Slacken the knurled knob at the right-hand end of the orientation scale, Fig. 2.2, and push the knob slowly to the left. Determine the earliest setting for which the receiver correctly registers two lines of 'Y's. Record this setting and call it 'a'.

★ Each small division on the orientation scale is equivalent to 5% of a signal element length.

(b) Move the orientation scale slowly to the right. Determine the latest setting for which the receiver correctly registers two lines of 'Y's. Record this setting and call it 'b'.

(c) Set the orientation scale to the mid-point of the range obtained above, i.e. ½(a + b). Tighten the knurled knob. Carry out an operational message test with the distant station.

2.11 If the operational test cannot be carried out with the distant station but another Model Seventy-five teleprinter known to be in working order is available, treat this second machine as a test set and link it up to the machine to be installed. All units of the machine to be installed can be tested and an approximate line-up obtained by carrying out the procedure outlined in paragraphs 2.10(a) to (c) above, with the second machine acting as the distant station. If this method of testing is used, the line-up procedure may need to be refined when the machine is finally connected to the distant station.

2.12 If the operational test cannot be carried out with the distant station and no other Model Seventy-five teleprinter is available, all units of a keyboard machine can be tested and an approximate line-up obtained by carrying out the following procedure.

'Self-test' line-up method

(a) Construct a 12-way plug and socket adaptor as shown in Fig. 2.1 and connect it between the machine external 12-way plug and the signal socket. Ensure that there is no line voltage from any other machine on the signal socket.

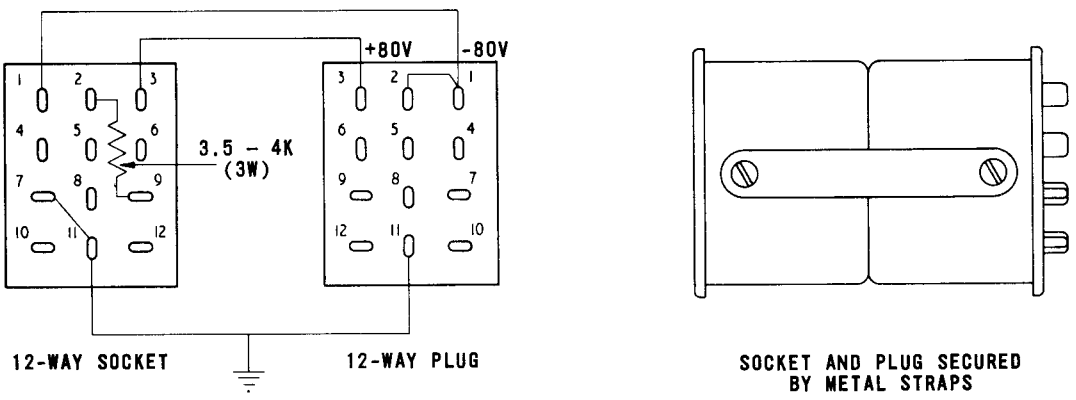


Fig. 2.1 12-WAY PLUG AND SOCKET ADAPTOR

(b) Connect the power supply plug and press the 'Y' (MSMSM) key on the keyboard. The machine will now run-out 'Y's until it is stopped by turning the rock-shaft stop arm, Fig. 2. 2, in a clockwise direction and so arresting the clutch. During this run-out operation, carry out the line-up procedure outlined in paragraphs 2.10(a) to (c) above. Remove the adaptor.

★ This method connects the send and receive sections of the machine together so allowing the transmitted signals to be regenerated at the receiver. Thus whatever code combination is inserted in the pin-box will print continuously until the mechanism is stopped. On machines which have no automatic carriage-return/line-feed facility, therefore, these functions will have to be operated independently during this test.

(c) If this method of testing is used, the line-up procedure may need to be refined when the machine is finally connected to the distant station.

2.13 Remove the platen knob, assemble the cover to the machine and secure it with its four screws. Refit the platen knob to the platen spindle.

## 3. INSTALLING A SINGLE-CURRENT MACHINE

3.1 Ensure that the machine is set up for single-current operation. A visual check that the electromagnet biasing springs are connected will normally be sufficient evidence of this condition. If in any doubt, however, carry out the conversion instructions given on page 8.

3.2 If the machine is a single-speed model supplied with a set of alternative motor gears, refer to the following table and check that the correct set of gears is fitted for the required operating speed. If necessary, change the gears as described in the instructions given on page 11, paragraphs 5.2 to 5.4.

| Baud Speed | Motor Pinion | Driven Gear | Colour Identification |
|---|---|---|---|
| 45 | GR 2199 | 4009/93A | Green |
| 50 | GR 2198 | 4009/94A | Yellow |
| 75 | GR 2201 | 4009/95A | Blue |

3.3 If the machine is fitted with a gear-box, check that both the speed- and gear-change levers are correctly set for the required operating speed. If necessary, reposition them in accordance with the instructions given on page 10.

3.4 Load the paper in the manner recommended in the Model Seventy-five Operator's Handbook.

3.5 Ensure that all parts of the mechanism are free to move without evidence of binding. Depress a printing key or, if no keyboard is fitted, set up a printing character in the pin-box and turn the machine by hand until the mechanism has passed through a complete cycle. Repeat this operation, inspecting the mechanism for smooth performance.

3.6 Unwrap the signal and motor cords and connect them to their respective chassis-mounted plugs at the rear of the machine main base. Push the connexions firmly home to ensure good contact and screw up the outer locking rings.

3.7 Ensure that the electrical connexions under the main base and in the signal cord are suited to the line circuit. A typical circuit suitable for single-current operation is provided in Part 1, Fig. 1. 11.

3.8 Ensure that the power supply corresponds to that specified on the motor. If it does not, refer to Part 1, Fig. 1. 10, and carry out such corrections as may be necessary. Connect the motor cord to the supply. Check that the main base is now earthed.

3.9 **Keyboard Machines.** Before any further local tests are carried out, ensure that the selector unit remains in the rest position. A convenient way to do this is to bias the electromagnet armature against the mark stop by slackening the screw clamping plate, Fig. 2.2, and turning the bias adjustment screw in a counter-clockwise direction.

★ Use a pencil mark to indicate the original factory setting of the bias adjustment screw so that it can be restored after the completion of the tests in paragraph 3.11.

**Receiver-only Machines.** The procedure recommended above can only be applied to keyboard machines. Receiver-only machines must be tested by linking them either to another teleprinter which is fitted with a keyboard or to an automatic transmitter (tape reader), both of which must be set up for single-current operation.

3.10 Switch on the power supply to the motor and check the motor speed in the manner recommended in Adjustment No. 81 (Part 4, page 60).

3.11 The machine may now be tested in 'local' before connecting the signal cord to the line circuit. During the test, check the operation of all printing characters and machine functions. Check that the length of the printing line is suitable for the circuit on which the machine is to be used and, if necessary re-adjust the line length as recommended in Adjustment No. 88 (Part 4, page 70). Check the operation of the end-of-line indicator and, if necessary, re-adjust this unit as described in Adjustment No. 113 (Part 4, page 90). Restore the bias adjustment screw to its original setting and secure it with its clamping plate.

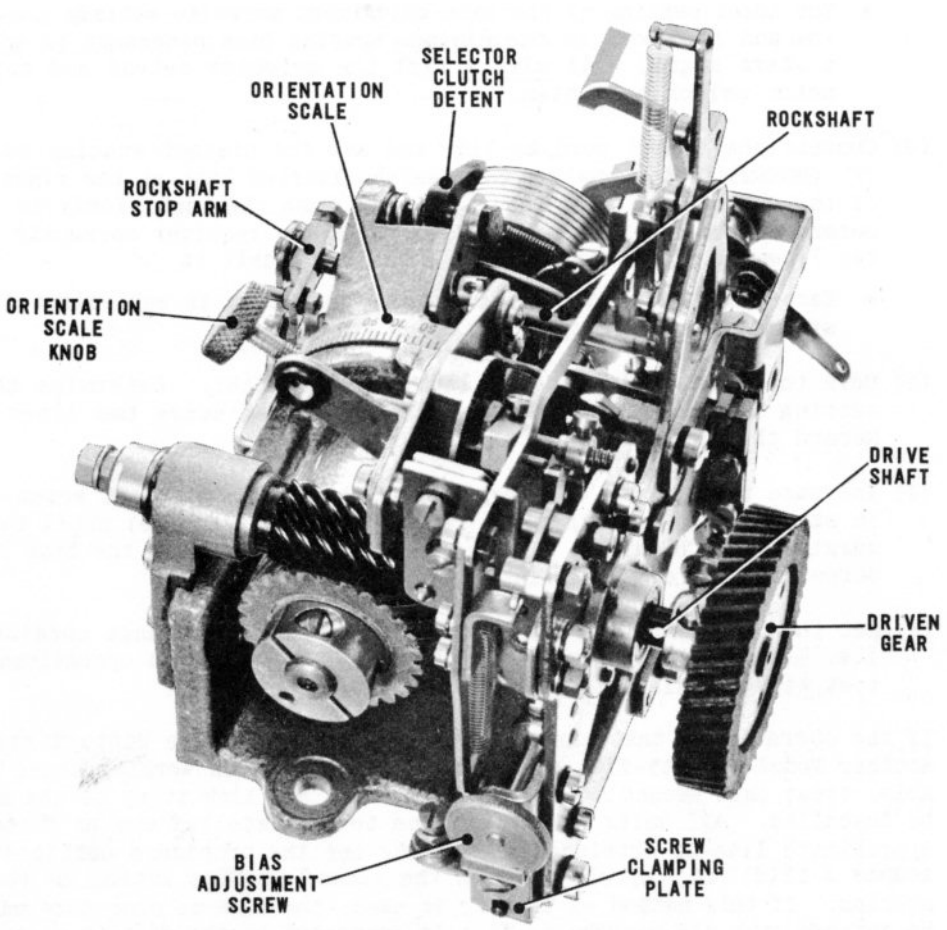


Fig. 2.2 SELECTOR UNIT—SINGLE-SPEED MODEL

3.12 The machine is now ready for an operational test with a distant station. During this test, the line-up procedure described below should be carried out. Check also that the line current does not fall below 35 mA.

Single-current line-up procedure

(a) Switch on the motor, slacken the screw clamping plate, Fig. 2. 2, and turn the bias adjustment screw slowly in a clockwise direction until the selector clutch detent is disengaged from the trigger and the clutch rotates continuously.

(b) Stop the clutch by applying finger pressure at each end of the rockshaft stop arm and turning the rockshaft gently in a clockwise direction. Remove the pressure from the stop arm and check that the spacing bias on the electromagnet armature is sufficient to lift the detent and release the clutch. Repeat this check a sufficient number of times to ensure that the detent release action is reliable. If the detent occasionally fails to release, increase the spacing bias slightly.

(c) Turn the rockshaft stop arm in a clockwise direction to hold the detent down into the path of the selector clutch until the automatic start/stop switch has switched off the motor. This action may take up to 1½ minutes.

Release the detent and check that the spacing bias is sufficient both to trigger the motor switch mechanism and to release the selector clutch. Repeat the check a sufficient number of times to ensure that the motor switch and clutch release actions are reliable.

★ The ideal setting of the bias adjustment screw to satisfy the checks in (b) and (c) above is the **minimum** spacing bias necessary to ensure that a start signal will **always** lift the selector detent and trigger the motor switch mechanism.

(d) Connect the signal cord to line and ask the distant station to transmit 'Y' (MSMSM) continuously. Slacken the knurled knob at the right-hand end of the orientation scale, Fig. 2. 2, and push the knob slowly to the left. Determine the earliest setting for which the receiver correctly registers two lines of 'Y's. Record this setting and call it 'a'.

★ Each small division on the orientation scale is equivalent to 5% of a signal element length.

(e) Move the orientation scale slowly to the right. Determine the latest setting for which the receiver correctly registers two lines of 'Y's. Record this setting and call it 'b'.

(f) Increase the spacing bias by turning the bias adjustment screw clockwise in steps of 1/8 of a turn and repeat checks (d) and (e) until the receive margin (i.e. 'b' minus 'a') is at its maximum. Secure the bias adjustment screw with its clamping plate.

(g) Set the orientation scale to the mid-point of the range obtained above, i.e. ½(a + b). Tighten the knurled knob. Carry out an operational message test with the distant station.

3.13 If the operational test cannot be carried out with the distant station but another Model Seventy-five teleprinter known to be in working order is available, treat this second machine as a test set and link it up to the machine to be installed. All units of the machine to be installed can be tested and an approximate line-up obtained by carrying out the procedure outlined in paragraphs 3.12(d) to (g) above, with the second machine acting as the distant station. If this method of testing is used, the line-up procedure may need to be refined when the machine is finally connected to the distant station.

3.14 Remove the platen knob, assemble the cover to the machine and secure it with its four screws. Refit the platen knob to the platen spindle.

# B. OPERATION INSTRUCTIONS

## 1. CONVERTING FROM SINGLE- TO DOUBLE-CURRENT OPERATION

1.1 Remove the platen knob and the four cover securing screws. Lift off the cover and refit the platen knob.

1.2 Disconnect the biasing springs, Fig.2.3, from the electromagnet armature.

1.3 With the machine in the rest position, slacken the two screws (one at each end) clamping the knock-out lever, pull the armature knock-out link away from the central pin on the armature link arm and raise it until it is clear of the arm. Tighten the screws, ensuring that the end-play on the knock-out lever is kept to a minimum.

1.4 With the electromagnet armature in the mark position, check that the top edge of the break-in operating lever is just touching the break-in cam. If necessary, slacken the locknut and screw clamping the lever to the rockshaft and adjust the lever until the condition is satisfied. Tighten the screw and locknut.

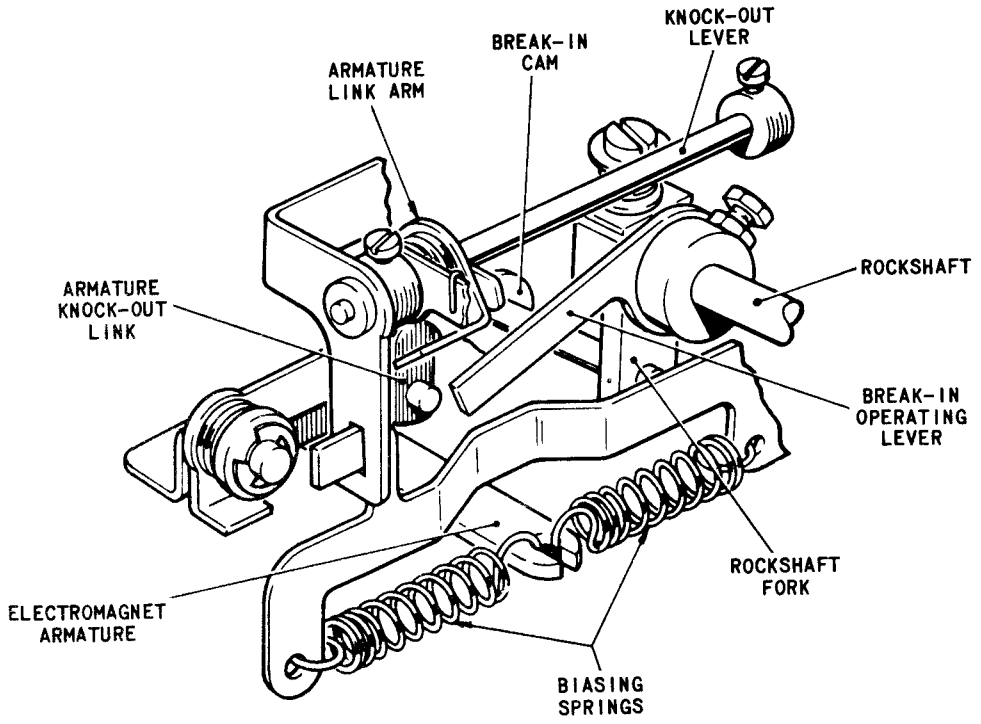


Fig. 2.3 ELECTROMAGNET/SELECTOR UNIT LINKAGE

1.5 Re-adjust the transmitter contacts as described in Adjustment Nos.82 or 83 (Part 4, pages 60 or 64).

1.6 Refer to Part 1, Fig.1.7, and connect the spark quench unit across the electromagnet.

1.7 Carry out the line-up procedure given in paragraph 2.10 on page 3.

1.8 Remove the platen knob, assemble the cover to the machine and secure it with its four screws. Refit the platen knob to the platen spindle.

## 2. CONVERTING FROM DOUBLE- TO SINGLE-CURRENT OPERATION

2.1 Remove the platen knob and the four cover securing screws. Lift off the cover and refit the platen knob.

2.2 With the machine in the rest position, slacken the two screws (one at each end) clamping the knock-out lever, Fig.2.3, and lower the armature knock-out link so that its hole locates over the central pin on the armature link arm. Position the knock-out link so that the pin on the end of the link arm is fully coupled to the rockshaft fork and tighten the knock-out lever screws, ensuring that the end-play on the lever is kept to a minimum.

2.3 With the electromagnet armature in the mark position, check that the top edge of the break-in operating lever is clear of the break-in cam by approximately .060 in. If necessary, slacken the locknut and screw clamping the lever to the rockshaft and adjust the lever until the condition is satisfied. Tighten the screw and locknut.

2.4 Re-adjust the transmitter contacts as described in Adjustment Nos.82 or 83 (Part 4, pages 60 or 64).

2.5 Refer to Part 1, Fig.1.7, and disconnect the spark quench unit from across the electromagnet.

2.6 Connect the biasing spring to the electromagnet armature.

2.7 Carry out the line-up procedure given in paragraph 3.12 on page 6.

2.8 Remove the platen knob, assemble the cover to the machine and secure it with its four screws. Refit the platen knob to the platen spindle.

## 3. CONVERTING A DUAL-SPEED (45/50 BAUD) MACHINE TO 75 BAUD OPERATION

3.1 Switch off the motor power supply. Remove the platen knob and the four cover securing screws. Lift off the cover and refit the platen knob.

3.2 Remove the motor unit from the machine main base as described in Part 5, page 3.

3.3 Disconnect the gear lever spring, Fig.2.4. Remove the screw securing the gear lever and withdraw the lever. Slacken the two collar securing screws so that the collars are free to move on the shouldered pin.

3.4 Hold the nut which clamps the shouldered pin to the starter main plate and unscrew the pin until it is free from the plate. Remove the gear-change fork.

3.5 Remove the outer driven gear (50 bauds-Yellow) and the screw securing the driving dog. Withdraw the dog and the inner driven gear (45 bauds-Green), taking care not to lose the driving dog.

3.6 Slide the 75-baud driven gear (4009/95A-Blue) on to the drive shaft, boss innermost, engaging its slot with the driving key. Secure the gear by fitting the screw which formerly held the driving dog into the gear boss, and securing it into the innermost of the two tapped holes in the drive shaft.

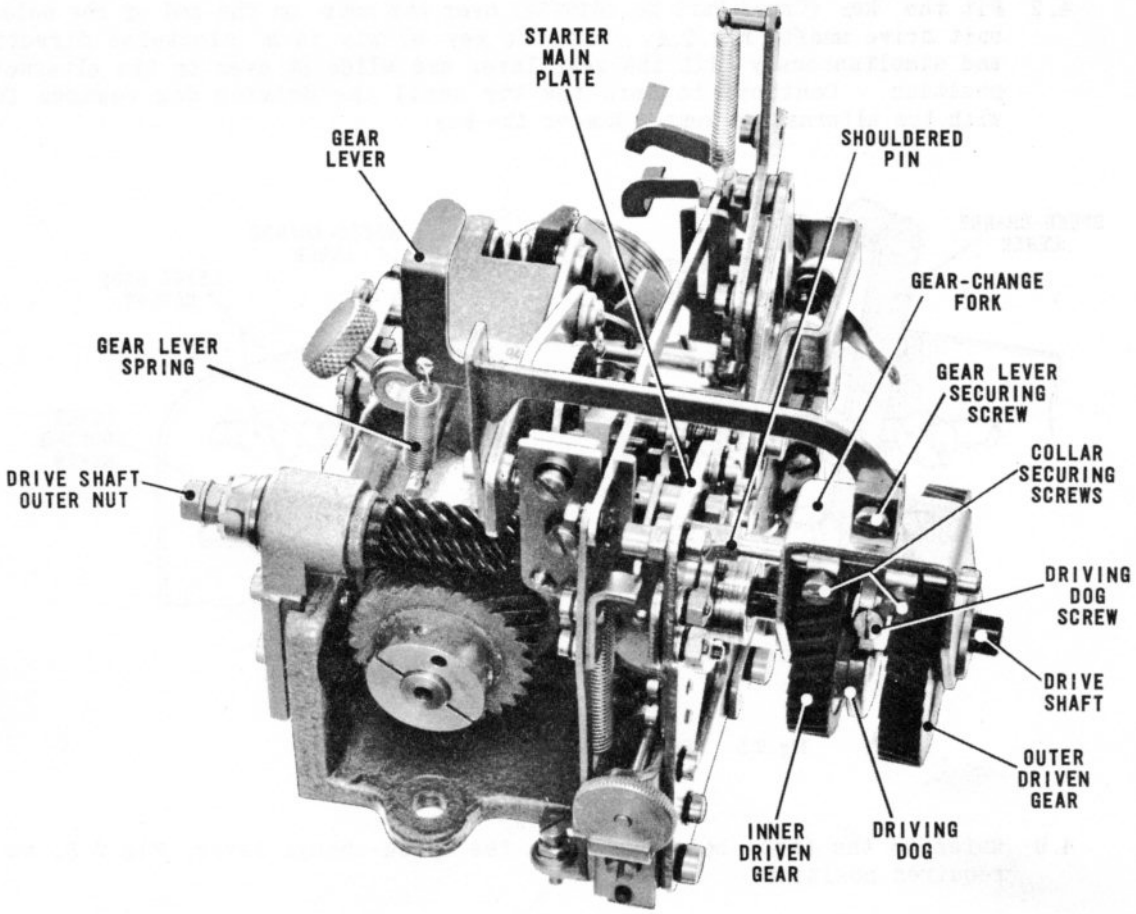


Fig. 2.4 SELECTOR UNIT FITTED WITH A GEAR-BOX

3.7 Remove the screw securing the two motor pinions and withdraw them from the motor. Fit the 75-baud motor pinion (GR2201-Blue) on to the motor shaft and secure it with its screw.

3.8 Reassemble the motor unit to the machine main base as described in Part 5, page 10.

3.9 Restore the power supply to the motor and carry out the appropriate line-up procedure, i.e. as described in paragraph 2.10 on page 3 for machines set up for double-current operation, or paragraph 3.12 on page 6 for single-current machines. Carry out Adjustment Nos.84 and 89 (Part 4, pages 68 and 71). To obtain optimum performance it may be necessary to refine the adjustment of the transmitter contacts after a speed change has been made. Adjustment Nos.82 or 83 refer (Part 4, pages 60 or 64).

3.10 Remove the platen knob, assemble the cover to the machine and secure it with its four screws. Refit the platen knob to the platen spindle.

## 4. CHANGING SPEED ON A MACHINE FITTED WITH A GEAR-BOX

4.1 Switch off the motor power supply. Remove the platen knob and the four cover securing screws. Lift off the cover and refit the platen knob. Ensure that the selector and translator clutches are at rest against their respective detents.

4.2 Fit the key (Creed Part No.4019/54) over the nuts on the end of the selector unit drive shaft, Fig.2.4. Turn the key slowly in a clockwise direction, and simultaneously lift the gear lever and slide it over to its alternative position. Continue to turn the key until the driving dog engages fully with the alternative gear. Remove the key.

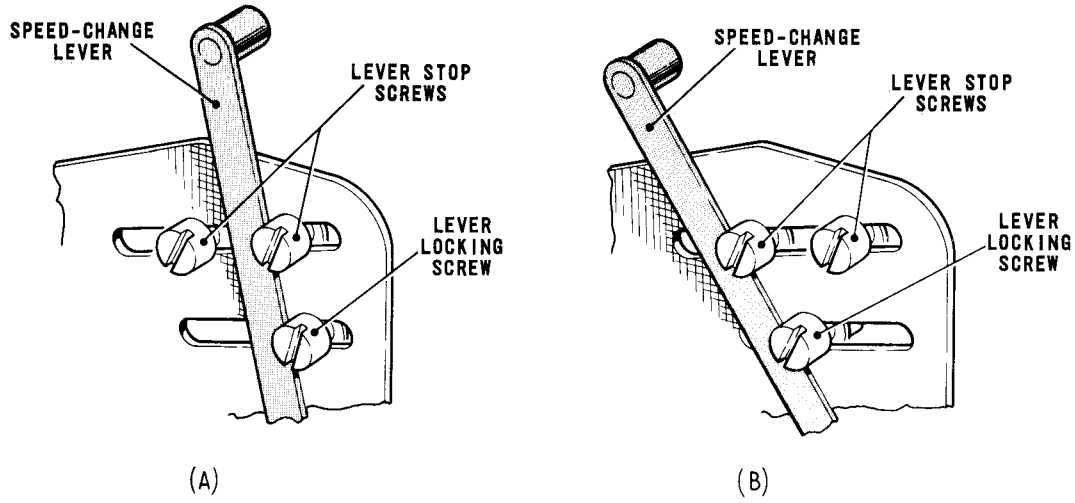


Fig. 2.5 SPEED-CHANGE LEVER POSITIONS

4.3 Refer to the table below and move the speed-change lever, Fig.2.5, to the required position;

| Range | Baud Speed | Position of Speed-change Lever | Position of Gear Lever |
|---|---|---|---|
| 45/50 | 45 | as Fig.2.5(a) | Left |
| | 50 | as Fig.2.5(a) | Right |
| 50/75 | 50 | as Fig.2.5(a) | Right |
| | 75 | as Fig.2.5(b) | Left |

4.4 Restore the power supply to the motor and carry out Adjustment Nos.84 and 89 (Part 4, pages 68 and 71). To obtain optimum performance it may be necessary to refine the adjustment of the transmitter contacts after a speed change has been made. Adjustment Nos.82 or 83 refer (Part 4, pages 60 or 64).

4.5 Remove the platen knob, assemble the cover to the machine and secure it with its four screws. Refit the platen knob to the platen spindle.

## 5. CHANGING SPEED ON A MACHINE WITHOUT A GEAR-BOX

5.1 Switch off the motor power supply. Remove the platen knob and the four cover securing screws. Lift off the cover and refit the platen knob.

5.2 Remove the screw securing the driven gear, Fig. 2.2, and withdraw the gear from its shaft.

5.3 Remove the screw securing the motor pinion to the motor shaft and withdraw the pinion.

5.4 Fit the spare pinion and driven gear to the motor and selector unit drive shafts respectively. Secure the pinion and gear with their screws.

5.5 Refer to the table below and move the speed-change lever, Fig. 2.5, to the required position.

| Baud Speed | Motor Pinion | Driven Gear | Colour Identification | Position of Speed-change Lever |
|---|---|---|---|---|
| 45 | GR 2199 | 4009/93A | Green | as Fig. 2.5(a) |
| 50 | GR 2198 | 4009/94A | Yellow | as Fig. 2.5(a) |
| 75 | GR 2201 | 4009/95A | Blue | as Fig. 2.5(b) |

5.6 Restore the power supply to the motor and carry out Adjustment Nos. 84 and 89 (Part 4, pages 68 and 71). To obtain optimum performance it may be necessary to refine the adjustment of the transmitter contacts after a speed change has been made. Adjustment Nos. 82 or 83 refer (Part 4, pages 60 or 64).

5.7 Remove the platen knob, assemble the cover to the machine and secure it with its four screws. Refit the platen knob to the platen spindle.

# PART 3

## CONTENTS


Page

SECTION A. MAINTENANCE INSTRUCTIONS

1. General . . . . . 1
2. 'Running In' Check . . . . . 3
3. Short Term . . . . . 3
4. Long Term . . . . . 5
5. Overhaul . . . . . 8

SECTION B. LUBRICATION INSTRUCTIONS

1. General . . . . . 11

# LIST OF ILLUSTRATIONS


| | |
|---|---|
| Fig.3.1 | Operations/Time Conversion Graph |
| Fig.3.2 | Governed Motor - Left-Hand End |
| Fig.3.3 | Lubrication Chart |
| Figs.3.4 to 3.23 | Pictorial Lubrication |

# PART 3

## A. MAINTENANCE INSTRUCTIONS

### 1. GENERAL

Maintenance of the Model Seventy-five Teleprinter should be carried out at the periods shown below in the Maintenance Summary. It must be appreciated, however, that the frequency at which maintenance attention will be required depends on the following variable factors.

(a) Baud speed of operation.

(b) Traffic loading.

(c) Environmental conditions of operation.

The teleprinter can be equipped with an operation counter which registers one unit for every ten thousand revolutions of the translator camshaft. It will be seen, therefore, that the maintenance attention may be based either on the hours of operation of the machine or the readings on the operation counter. Both these alternative arrangements are shown in the Maintenance Summary, and an Operations/Time Conversion Graph is provided at Fig. 3.1. Of these alternatives, however, the operation counter readings give a more reliable guide to the actual amount of mechanical effort carried out by the machine, since the operation counter automatically takes into account the first two variable factors which help to determine the frequency of maintenance.

★ Note that since the operation counter only records the number of revolutions of the translator camshaft, the counter readings will not check the running hours of the motor, particularly if the auto-start facility is removed or inhibited.

MAINTENANCE SUMMARY

| Attention | Hours of Operation at 50 bauds | Operation Counter Reading |
|---|---|---|
| 'Running In' Check | 50 | 120 |
| Short Term | 1000 | 2400 |
| Long Term | 3000 | 7200 |
| Overhaul | 5000 | 12000 |

With the third variable factor, i.e. environmental conditions of operation, it can only be left to the discretion of the individual customer to extend or shorten the periods of maintenance attention as required. As a general guide, however, a machine operated in a hot climate will tend to require maintenance and lubrication attention at shorter intervals than one operated under ideal climatic conditions.

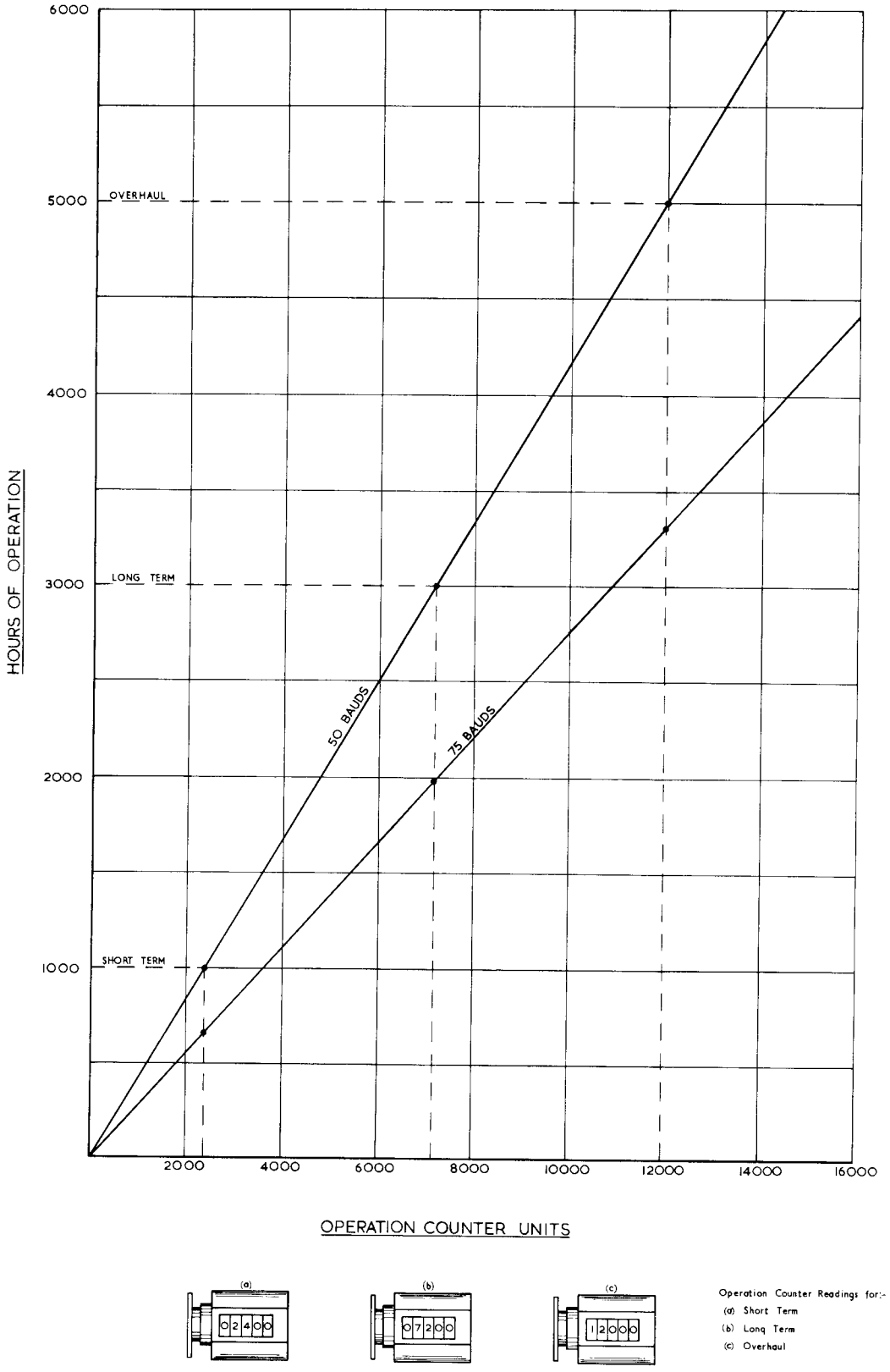


Fig. 3.1 OPERATIONS/TIME CONVERSION GRAPH

2.

| 'RUNNING IN' CHECK | 50 hours of operation<br>at 50 bauds, or<br>120 operation counter units |
|---|---|

2.1 After an initial 'running in' period, carry out a thorough functional check, preferably with the co-operation of a distant station. Test the operation of all keys and any special facilities that may be fitted, such as answer-back, end-of-line indicator, two-colour printing or reperforating attachment. If any character fails to print, or any facility fails to operate correctly, inspect the relevant parts and check their adjustments.

★ Remember that, because of the design features that provide for mechanical production of the local record, the operation of the transmitter, selector unit and electromagnet can only be checked if the machine under test is linked to another machine.

2.2 Ensure that the operator is familiar with all the controls and special facilities, and is using them in the correct manner. Check that the operator can replace paper and ribbon correctly (see Model Seventy-five Operator's Handbook).

3.

| SHORT TERM | 1000 hours of operation<br>at 50 bauds, or<br>2400 operation counter units |
|---|---|

General

3.1 Remove the signal and power plugs from the rear of the machine main base. Take off the machine cover and inspect the mechanism for the following points.

(a) Visual damage.

(b) Excessive wear of mechanical components.

(c) Lubrication failure, as indicated by the presence of a red powdery substance.

(d) Corrosion.

(e) Charring, overheating or tracking of electrical components.

(f) Faulty insulation or poor termination of wiring.

(g) Loose fixing screws, locknuts or circlips.

3.2 Using a soft brush, remove all traces of paper fluff, dust and tape cuttings from the machine. Clear the typefaces with a stiff brush, paying particular attention to those with small closed loops, e.g. A, %, P.

3.3 Check the carriage return tape for fraying and renew as necessary.

3.4 Inspect the ink ribbon for wear and renew if necessary.

3.5 Carry out the Lubrication Instructions given on page 11. After lubrication, use a dry cloth to remove any lubricant that may have spread from the points of application. In particular, ensure that the transmitter contact assembly, platen, platen pressure rollers, ribbon guides and reperforator tape guides are free from all traces of lubricant.

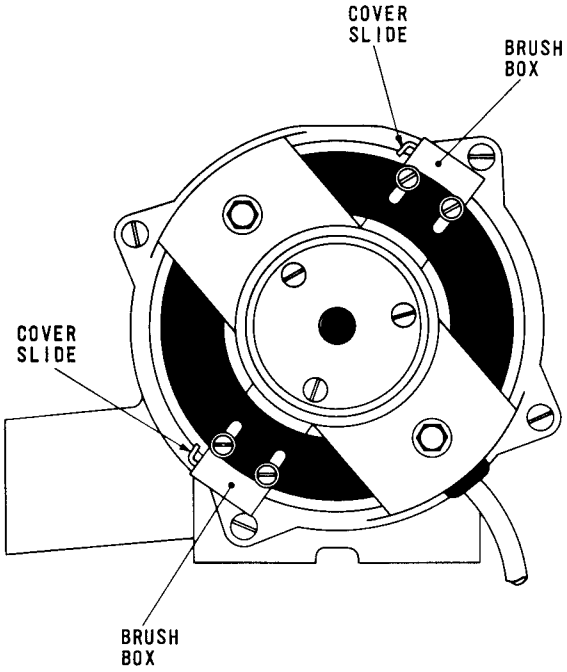


Fig. 3.2 GOVERNED MOTOR — LEFT-HAND END

Motor and Governor

3.6 Remove the motor from the machine main base in the manner recommended in Part 5, page 3. Take off the cover over the commutator end of the motor, exposing the commutator and brushes. Examine the length of the brushes as seen through the slot in the side faces of the brush boxes, Fig. 3.2, and note whether any coils of the brush springs can be seen. If so, fit a new brush and spring assembly in the following manner.

(a) Hold down the circular brass cap of the spring to prevent the cap from springing out, and remove the brush slide from the brush box.

(b) Withdraw the old brush, spring and cap.

(c) Insert a new brush assembly, press the brass cap fully home in its seating and refit the brush slide.

★ If there is any wear on the commutator, the expected life of each new set of motor brushes is likely to become progressively less than that of its preceding set. It is recommended that after each set of brushes has been replaced, the periodic inspection of brush length is carried out at progressively more frequent intervals.

3.7 Using a soft brush, remove all carbon dust from the accessible parts of the motor and governor contact assembly. Clean the commutator with a dry cloth and remove all carbon dust from the commutator slots with a stiff brush. If there is a smooth black glaze on the commutator surface, do not attempt to remove it in any way. Refit the commutator cover.

3.8 Check the operation of the governor contacts and inspect the nylon contact peg for wear. If the peg is worn, remove the governor contact assembly from the sub-base of the motor unit and fit a new peg (Creed Part No. 4018/30). Refit the governor contact assembly to the sub-base and hold the assembly against its abutment before tightening the fixing screw.

3.9 Refit the motor unit to the machine main base and re-connect the signal and power plugs. Switch on the motor and check its speed in the manner recommended in Adjustment No.81 (Part 4, page 60).

Functional

3.10 Carry out a thorough functional check as described in paragraph 2.1 above.

4.

| | |
|---|---|
| LONG TERM | 3000 hours of operation<br>at 50 bauds, or<br>7200 operation counter units |

General

4.1 Remove the signal and power plugs from the rear of the machine main base. Take off the machine cover and inspect the mechanism for the following points.

(a) Visual damage.

(b) Excessive wear of mechanical components.

(c) Lubrication failure, as indicated by the presence of a red powdery substance.

(d) Corrosion.

(e) Charring, overheating or tracking of electrical components.

(f) Faulty insulation or poor termination of wiring.

(g) Loose fixing screws, locknuts or circlips.

4.2 Using a soft brush, remove all traces of paper fluff, dust and tape cuttings from the machine. Clean the typefaces with a stiff brush, paying particular attention to those with small closed loops, e.g. A. %, P.

4.3 Check the carriage return tape for fraying and renew as necessary.

4.4 Inspect the ink ribbon for wear and renew if necessary.

4.5 Carry out the Lubrication Instructions given on page 11. After lubrication, use a dry cloth to remove any lubricant that may have spread from the points of application. In particular, ensure that the transmitter contact assembly, platen, platen pressure rollers, ribbon guides and reperforator tape guides are free from all traces of lubricant.

4.6 Check all drive shaft bearings for end-play and side-play, paying particular attention to the adjustments listed below.

(a) Selector Drive Shaft End-Play – Adjustment No.12 (Part 4, page 9).

(b) Selector Rockshaft End-Play – Adjustment No.34 (Part 4, page 28).

(c) Typehead Carriage End-play – Adjustment No.48 (Part 4, page 37).

Motor and Governor

4.7 Remove the motor from the machine main base in the manner recommended in Part 5, page 3. Take off the cover over the commutator end of the motor, the governor cover and the governor contact assembly cover.

4.8 Examine the length of the brushes as seen through the slot in the side faces of the brush boxes, Fig. 3.2, and note whether any coils of the brush springs can be seen. If so, fit a new brush and spring assembly as described in paragraphs 3.6(a) to (c) above.

4.9 Rotate the armature shaft slowly by hand and check for tight spots or excessive end-play.

4.10 Using a dry cloth and a stiff brush, remove all carbon dust which may have accumulated inside the motor body, on the end castings, the armature windings or the commutator slots. Examine the surface of the commutator for wear or pitting and, if necessary, reface it in the manner described in paragraph 5.8 below. If there is a smooth black glaze on the commutator surface, however, do not attempt to remove it in any way.

4.11 Using a soft brush, remove all carbon dust which may have accumulated in the governor contact assembly, particularly between the contact blades. Examine the governor contacts for pitting and burnish or renew as necessary. Inspect the nylon contact peg for wear. If the peg is worn, remove the governor contact assembly from the sub-base of the motor unit and fit a new peg (Creed Part 4018/30). Refit the governor contact assembly to the sub-base and hold the assembly against its abutment before tightening the fixing screw.

4.12 Refit the commutator cover, the governor cover and the governor contact assembly cover. Refit the motor to the machine main base and re-connect the signal and power plugs. Switch on the motor and check its speed in the manner recommended in Adjustment No.81 (Part 4, page 60).

Select and Translator Units

4.13 Check the following adjustments and correct where necessary.

(a) Translator Clutch – Adjustment No.28 (Part 4, page 23).

(b) Pin-Box Traverse Multiplying Lever – Adjustment No.29 (Part 4, page 23).

(c) Pecker Retention Arm – Adjustment No.30 (Part 4, page 24).

(d) Selector Detent Clearance – Adjustment No.31 (Part 4, page 25).

(e) Selector Camshaft Retention Lever – Adjustment No.32 (Part 4, page 26).

(f) Selector Clutch – Adjustment No.33 (Part 4, page 27).

(g) Translator Trip Operating Lever Stop – Adjustment No.35 (Part 4, page 28).

(h) Translator Clutch Trip – Adjustment No.36 (Part 4, page 28).

(j) Starter Trip from Electromagnet – Adjustment No.37 (Part 4, page 29).

(k) Starter Trip from Translator Clutch – Adjustment No.38 (Part 4, page 29).

(l) Pecker/Code Selection Pin Clearance – Adjustment No.39 (Part 4, page 30).

(m) Pecker Traverse – Adjustment No.40 (Part 4, page 31).

Carriage Return, Dashpot, Line and Letter Feed Mechanisms

4.14 Check the operation of the dashpot and the carriage return spring drum. Check the vertical carriage return and line feed levers for positive action from their function bars.

4.15 Check the following adjustments and correct where necessary.

| | |
|---|---|
| (a) Carriage Return Pawl Lift | - Adjustment No.41 (Part 4, page 32). |
| (b) Line Feed Lever Stop Plate | - Adjustment No.42 (Part 4, page 32). |
| (c) Line Feed Pawl Overthrow Stops | - Adjustment No.46 (Part 4, page 37). |
| (d) Typehead Carriage Stop Screw and Pawl Latch | - Adjustment No.49 (Part 4, page 38). |
| (e) Feed and Retention Pawl Height | - Adjustment No.50 (Part 4, page 39). |
| (f) Typehead Carriage Feed Link | - Adjustment No.51 (Part 4, page 39). |
| (g) Carriage Return Spring | - Adjustment No.52 (Part 4, page 40). |
| (h) Dashpot | - Adjustment No.53 (Part 4, page 41). |

Printing Mechanism

4.16 Inspect the typefaces for wear and check the type alignment. Check the surfaces of the platen and the platen pressure rollers for wear and renew as necessary.

4.17 Check the operation of the ink ribbon control mechanism, and the action of the ribbon changeover mechanism at each end of the ribbon traverse.

4.18 Check the following adjustments and correct where necessary.

| | |
|---|---|
| (a) Friction Feed Platen | - Adjustment No.43 (Part 4, page 33). |
| (b) Sprocket Feed Platen | - Adjustment No.44 (Part 4, page 34). |
| (c) Paper Guide Retainers | - Adjustment No.45 (Part 4, page 36). |
| (d) Platen Retention Pawl | - Adjustment No.47 (Part 4, page 37). |
| (e) Print Spring | - Adjustment No.54 (Part 4, page 41). |
| (f) Typehead/Platen Clearance | - Adjustment No.55 (Part 4, page 42). |
| (g) Print Beam Stop Screw | - Adjustment No.56 (Part 4, page 43). |
| (h) Typehead Corrector | - Adjustment No.57 (Part 4, page 43). |
| (j) Typehead Corrector Track Rail | - Adjustment No.58 (Part 4, page 44). |
| (k) Ribbon Unit Pawls | - Adjustment No.67 (Part 4, page 49). |
| (l) Ribbon Jumper Arm | - Adjustment No.68 (Part 4, page 50). |
| (m) Typehead Height-Final Setting | - Adjustment No.85 (Part 4, page 69). |

Keyboard and Transmitter

4.19 Inspect the transmitter code, sequential and send-receive contacts and burnish as necessary.

4.20 Check the operation of the run out keybar for positive action.

4.21 Check the following adjustments and correct where necessary.

| | |
|---|---|
| (a) Contact Springs | - Adjustment No.23 (Part 4, page 16). |

(b) Keyboard Combination Bar Reset – Adjustment No.69 (Part 4, page 51).
(c) Selector Bar/Selection Pin Alignment – Adjustment No.71 (Part 4, page 52).
(d) Selector Bar/Selection Pin Clearance – Adjustment No.72 (Part 4, page 52).
(e) Lag Weight Release Lever Stop – Adjustment No.73 (Part 4, page 53).
(f) Lag Weight Trip – Adjustment No.74 (Part 4, page 54).
(g) Lag Weight Movement – Adjustment No.75 (Part 4, page 55).
(h) Translator Trip from Lag Weight – Adjustment No.76 (Part 4, page 55).
(j) Send-Receive Delay Lever Clearance – Adjustment No.77 (Part 4, page 56).
(k) Send-Receive Switch Contacts – Adjustment No.78 (Part 4, page 57).
(l) Send-Receive Contact Delay – Adjustment No.79 (Part 4, page 57).

4.22 Check the operation of the transmitter code contacts. Check the signals length and position of the sequential start, stop and code contacts using either a TDMS (Adjustment No.82 – Part 4, page 60) or a timing disc (Adjustment No.83 Part 4, page 64).

Reperforating Attachment

4.23 Check the punches for wear and renew as necessary.

4.24 Check that the reperforator control knob, feed wheel knob and back space key operate correctly.

4.25 Check that the reperforator tape punching and feeding actions are inhibited on the operation of the Bell, WRU? and 'Here Is' signals.

4.26 Check the correct operation of the tape exhaust alarm – Adjustment No.104 (Part 4, page 85) refers.

4.27 Perforate a test message consisting of all keyboard characters, symbols and functions. Inspect the test message for accuracy and tape pitch. If any character fails to punch or the tape pitch is faulty, inspect the relevant parts and check their adjustments.

Answer-Back Unit

4.28 Depress the 'Here Is' key and check that the answer-back unit operates correctly.

4.29 Depress the WRU? key and check that this action inhibits the answer-back unit and operates the local WRU? alarm.

Functional

4.30 Carry out a thorough functional check as described in paragraph 2.1 above.

5.

| OVERHAUL | 5000 hours of operation<br>at 50 bauds, or<br>12000 operation counter units |
|---|---|

General

5.1 Dismantle all the units from the machine main base in the manner recommended in Part 5, pages 2 to 6.

5.2 Dismantle the following individual units as described in Part 5, pages 12 to 21. Discard all lubricating felts and circlips as they are taken off the units.

Keyboard
Function Bar Unit
Translator Unit
Selector Unit
Aggregate Motion Unit
Typehead Carriage Unit
Platen Unit
Ribbon Unit
Reperforating Attachment
Answer-Back Unit
Operation Counter

5.3 Using trichlorethylene and a soft brush, remove all traces of old lubricant from the dismantled parts. Thoroughly examine all working components for wear or damage and renew as necessary.

★ Note that all oil-impregnated bearings which have been treated with trichorethylene must be re-soaked in lubricant for a minimum of 12 hours before reassembly.

5.4 Reassemble the individual units as described in Part 5, pages 23 to 34, refitting new lubricating felts and circlips in place of those previously discarded.

5.5 Carry out the Lubrication Instructions given on page 11.

## Motor and Governor

5.6 Dismantle the motor unit as described in Part 5, page 12.

5.7 Soak the motor bearings in trichlorethylene and brush out all the old grease. Thoroughly examine the bearings for wear or damage and renew as necessary. If the bearings are sound and appear likely to last until the next overhaul period, repack them immediately with Creed Lubricant No.4 (Aeroshell 6B).

5.8 Using a dry cloth and a stiff brush, remove all carbon dust which may have accumulated inside the motor bidy, on the end castings, the armature windings or the commutator slots. Examine the surface of the commutator. If this has a smooth black glaze do not attempt to remove it in any way. If, however, the surface is worn or pitted, reface it in the following manner.

(a) Mount the armature in a lathe, skim the commutator surface with a sharp pointed tool, and then remove all burrs from the edge of the commutator slots.

★ Do not remove any more metal than is absolutely necessary. The minimum diameter to which the commutator may be safely reduced is 1.00 in.

(b) Check that the insulation is now an estimated .031 – .036 in. below the surface of the commutator, and that the full depth of the undercut extends over the whole width of the brush track.

(c) With a sharp pointed tool, undercut each slot that does not meet this requirement. Carefully remove all insulating material from the sides of any slot treated.

★ The width of the slot is .028 – .031 in., and the undercutting tool used for this operation should be selected with these limits in mind.

(d) When all the slots are of the correct depth, take a light finishing cut over the commutator surface, remove all burrs and bring to a high polish with fine glass paper. **Do not use emery cloth for this operation.**

(e) Brush out all dust and metal fragments from the slots.

5.9 Refit new brush spring assemblies as described in paragraphs 3.5(a) to (c) above.

5.10 Brush out all dust from the governor contact assembly. Examine the governor contacts for pitting and burnish or renew as necessary.

5.11 Reassemble the motor unit as described in Part 5, page 23.

Reassembly

5.12 Carry out Section 1 of the Adjustment Instructions - Part 4, pages 3 to 22 refer.

5.13 Reassemble the following units to the machine main base.

Electromagnet
Translator and Function Bar Units
Selector Unit
Aggregate Motion Unit
Typehead Carriage Unit
End-of-Line Indicator and Carriage Return Spring Drum
Ribbon Unit
Motor Unit
Platen Unit

5.14 Complete Section 2 or the Adjustment Instructions - Part 4, pages 23 to 50 refer.

5.15 Reassemble the following units to the machine main base.

Keyboard
Selector Frames Unit
Answer-Back Unit

5.16 Complete Section 3 of the Adjustment Instructions - Part 4, pages 51 to 59 refer.

5.17 Reassemble the following units to the machine.

Transmitter Unit
Operation Counter

5.18 Complete Section 4 of the Adjustment Instructions - Part 4, pages 60 to 76 refer.

5.19 Reassemble the Reperforating Attachment to the machine main base.

5.20 Complete Section 5 of the Adjustment Instructions - Part 4, pages 77 to 95 refer.

Functional

5.21 Carry out a thorough functional check as described in paragraph 2.1 above.

# B. LUBRICATION INSTRUCTIONS

## 1. GENERAL

Although all machines are fully lubricated before leaving the factory, there is a possibility that some oil may be lost in storage or in transit. Inspect the machine for lubrication before installation. If this inspection shows that some of the lubrication points have dried up, or if the machine is known to have been held in storage for a period of six months or over, re-lubricate the machine before putting it into service. Subsequent lubrication should be carried out at the intervals recommended in the Maintenance Instructions.

The colour of the spots and bands indicate the type of lubricant recommended. Place the lubricant at the exact point shown, unless specifically indicated otherwise by a note underneath the figure. After lubrication, use a dry cloth to remove any excess lubricant that may have spread from the points of application.

### LUBRICANTS

| | | |
|---|---|---|
| ● Creed No.2 | – | Medium oil (SAE 30)<br>Equivalents – Shell Talpa oil 30<br>Castrol XL |
| ● Creed No.9 | – | Thin oil (SAE 10)<br>Equivalent – Shell Tellus oil 29 |
| ● Creed No.6 | – | Molybdenum disulphide grease<br>Equivalent – Rocal MT-LM |
| ● Creed No.7 | – | Soft grease<br>Equivalents – Shell Alvania No.1<br>Castrol Spheerol AP.1 |

### Clutch Drum and Bands

With the laminated clutch hands used on previous models of the Seventy-five teleprinter, special care had to be taken to ensure that the drum was always kept completely dry. On the helical-type clutch, however, the drum and bands should be fully lubricated on assembly and each subsequent 1000 hours, as follows:

(a) With the machine in the rest position, soak the drum and bands thoroughly with thin oil (Creed No.9).

(b) Switch on the motor and allow it to run for approximately 15 minutes.

* A small piece of paper inserted between the starter switch pin and its worm wheel will prevent the motor from switching off.

(c) Stop the motor and re-lubricate the drum and bands. Connect the machine to a source of signals, switch on the motor again and allow the machine to print out these signals for about 5 minutes. During this period the surplus oil will be thrown off the clutches and the margin will settle down to its normal working figure.

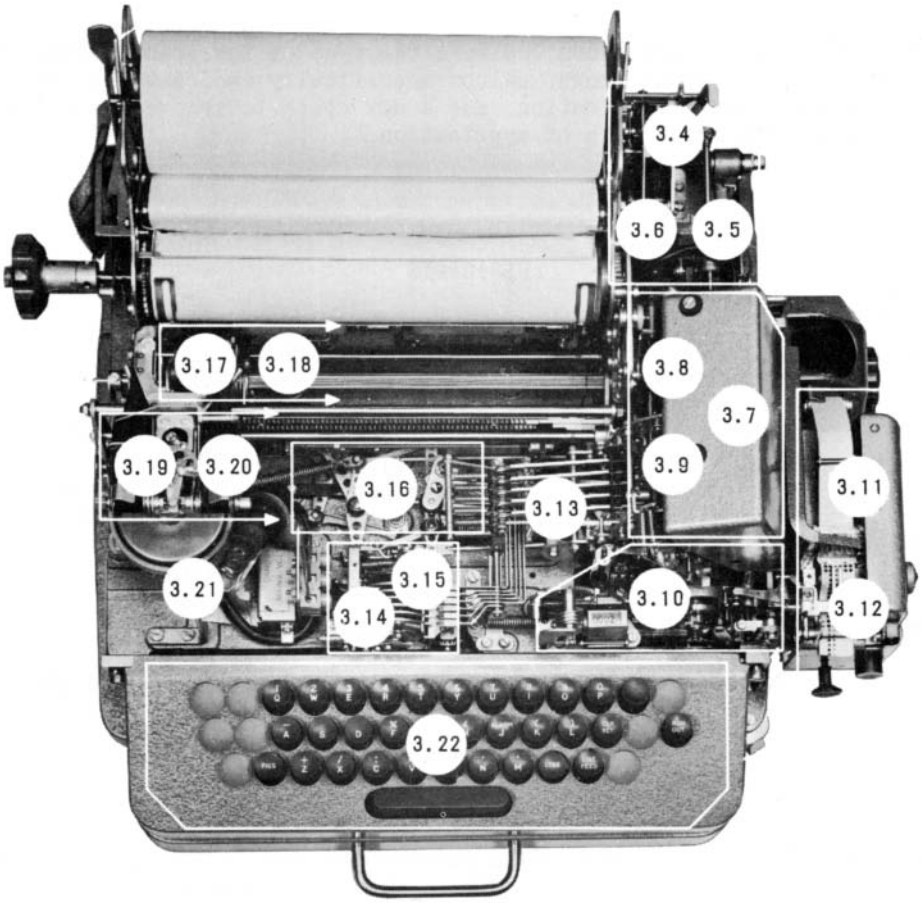


Fig. 3.3 LUBRICATION CHART

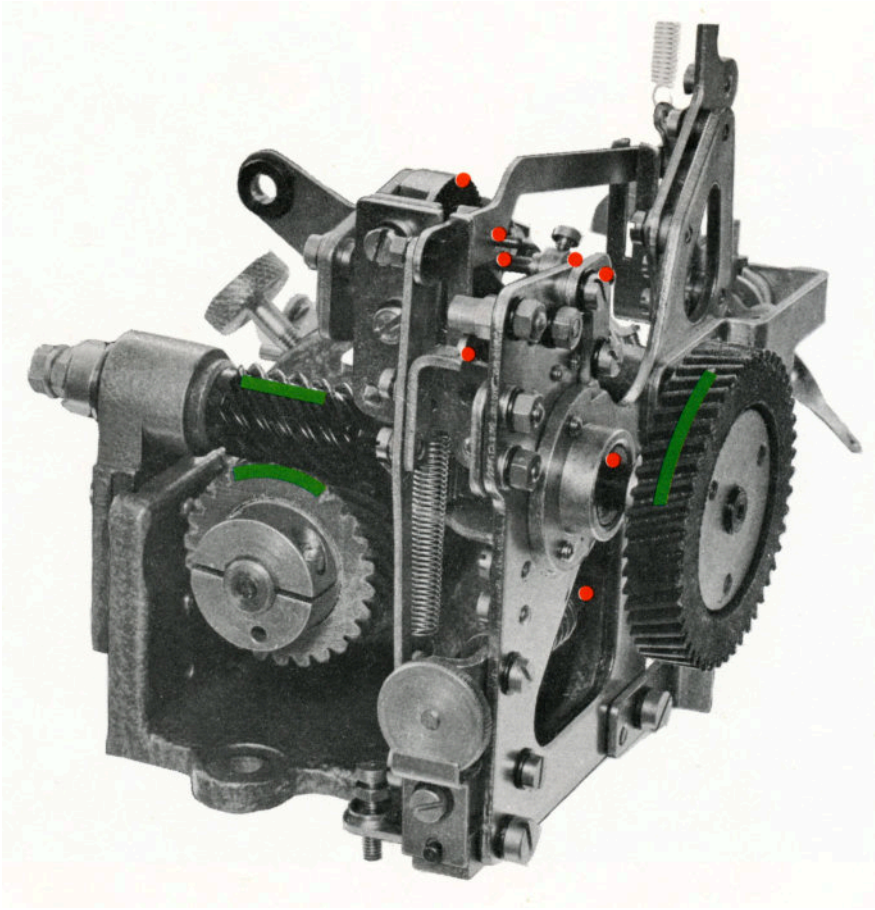

Fig. 3.4

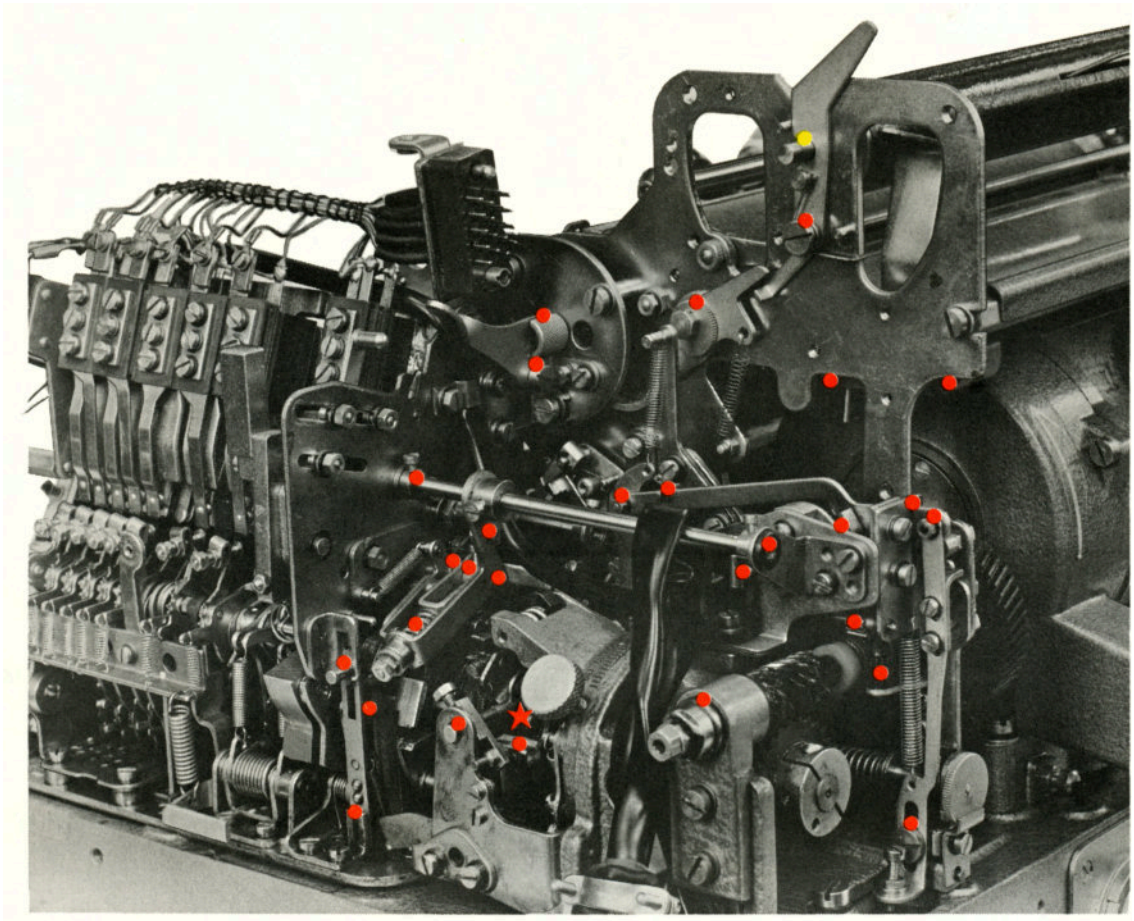

Fig. 3.5

★ Fill the oil hole (located under the yellow spring clip) and lubricate the felt surrounding the selector camsleeve.

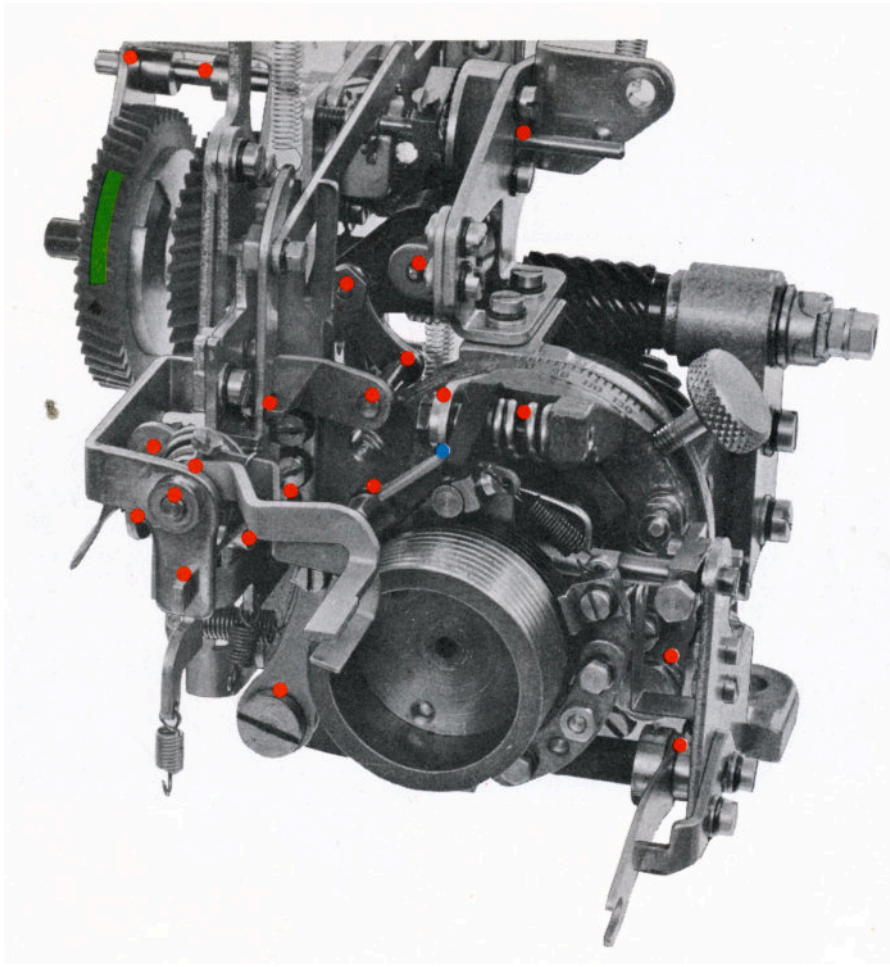

Fig. 3.6

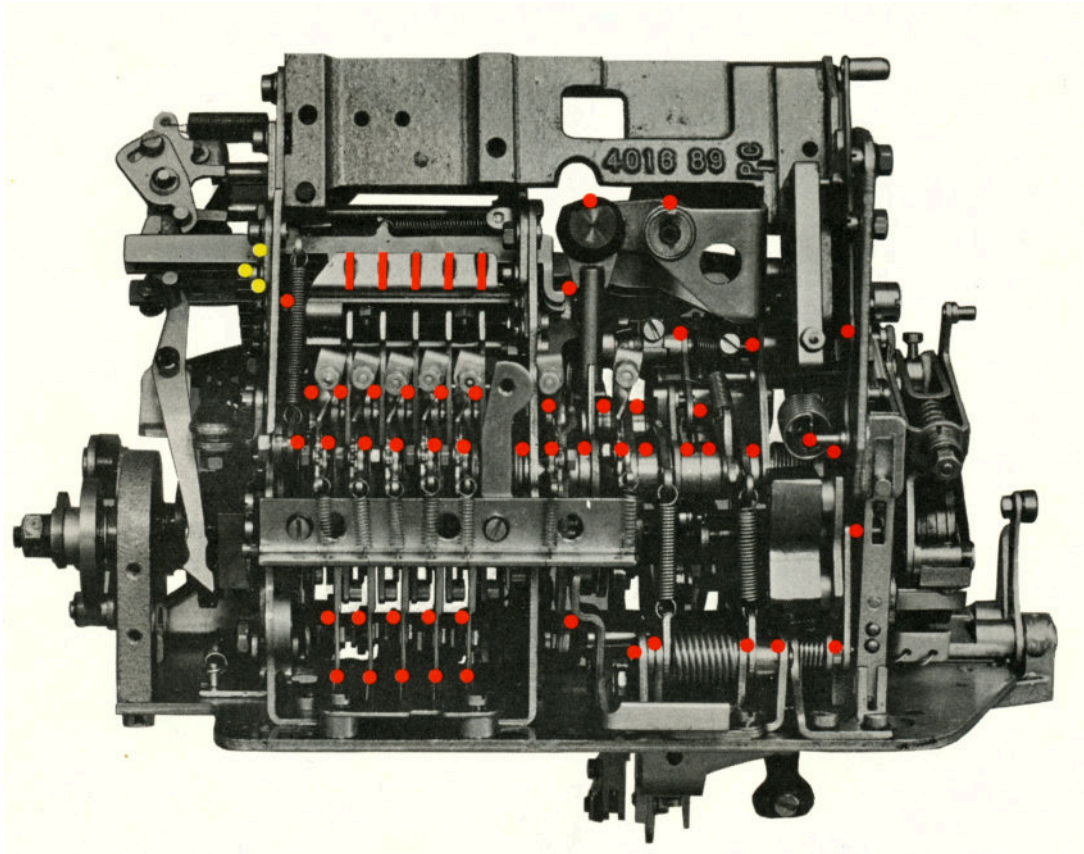


Fig. 3.7

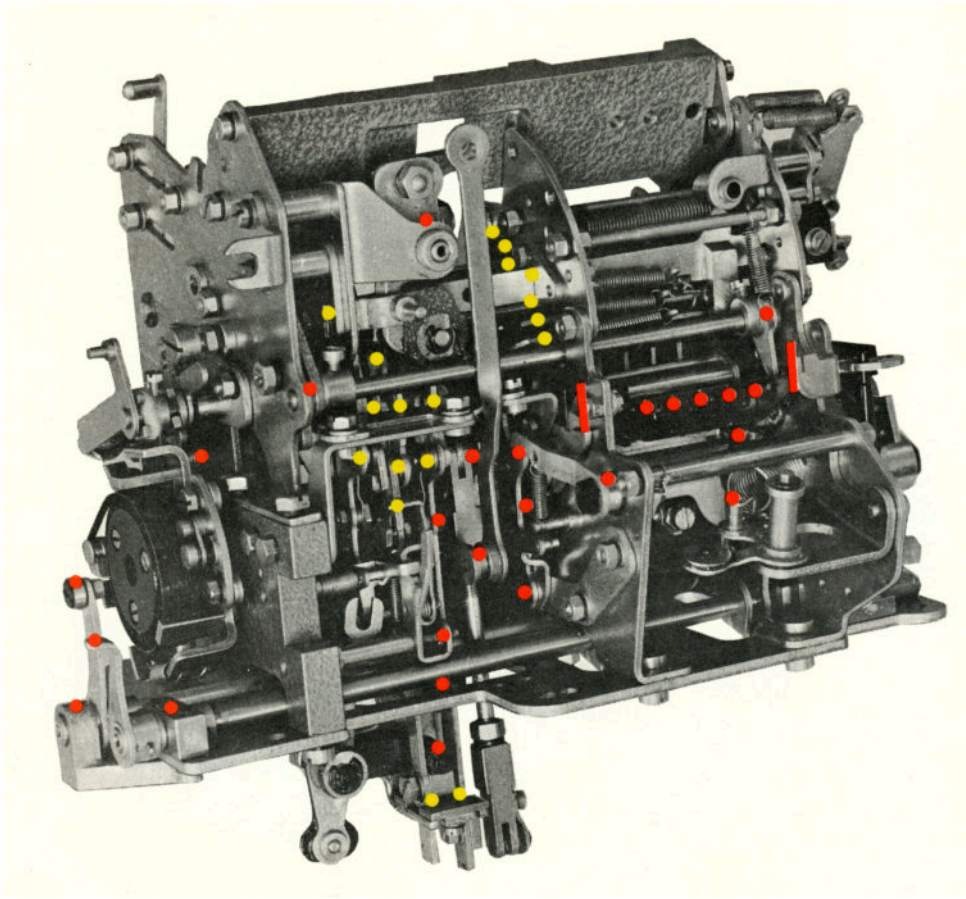

Fig. 3.8

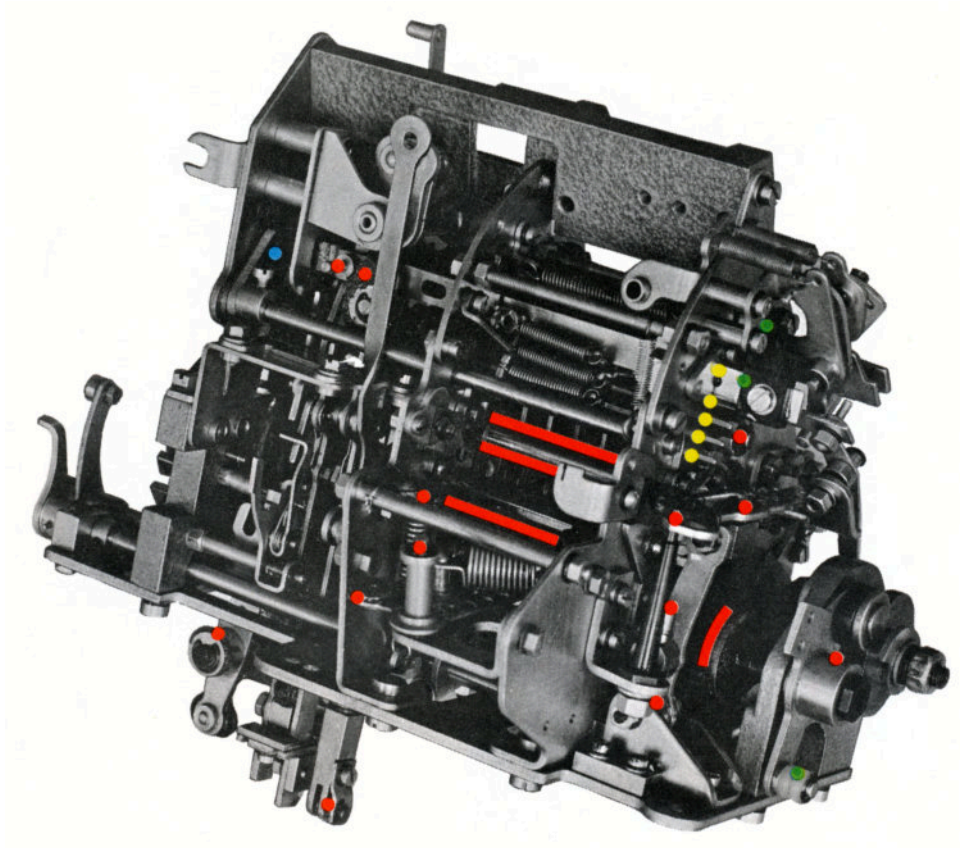

Fig. 3.9

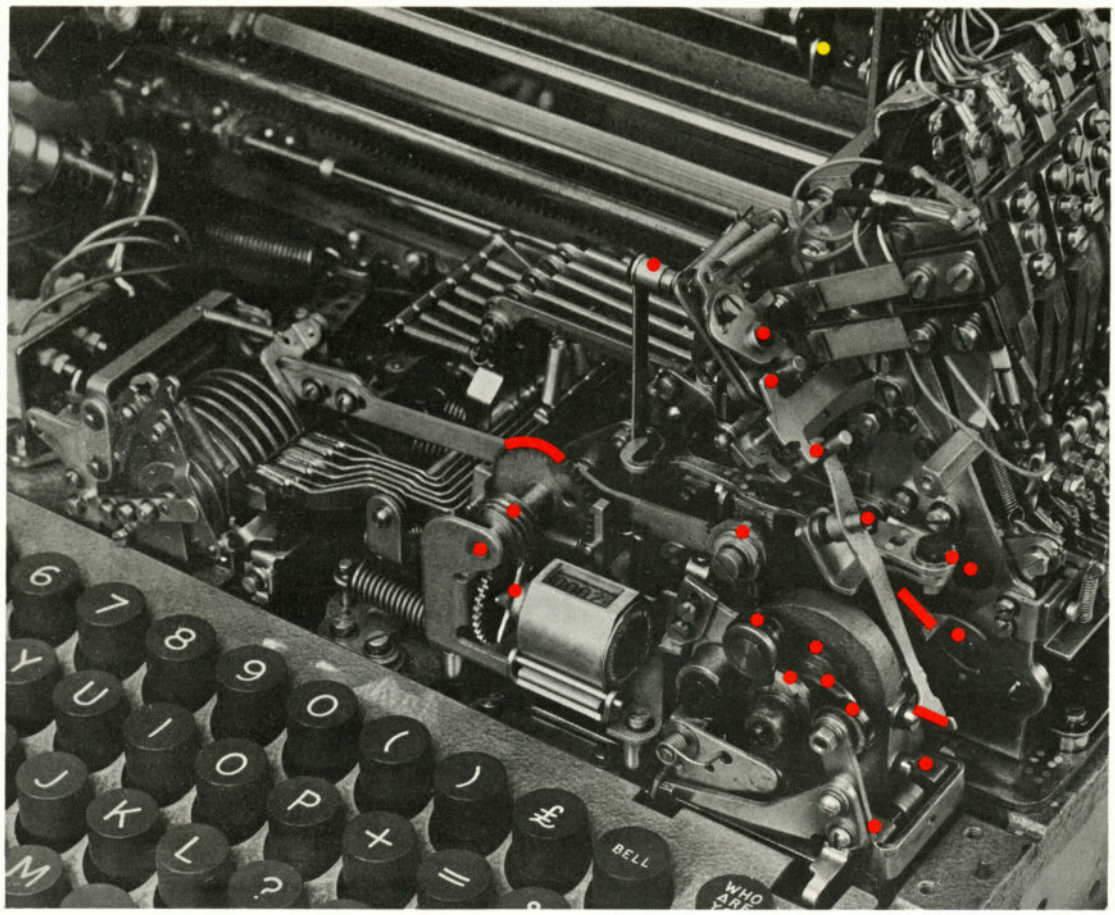


Fig. 3.10

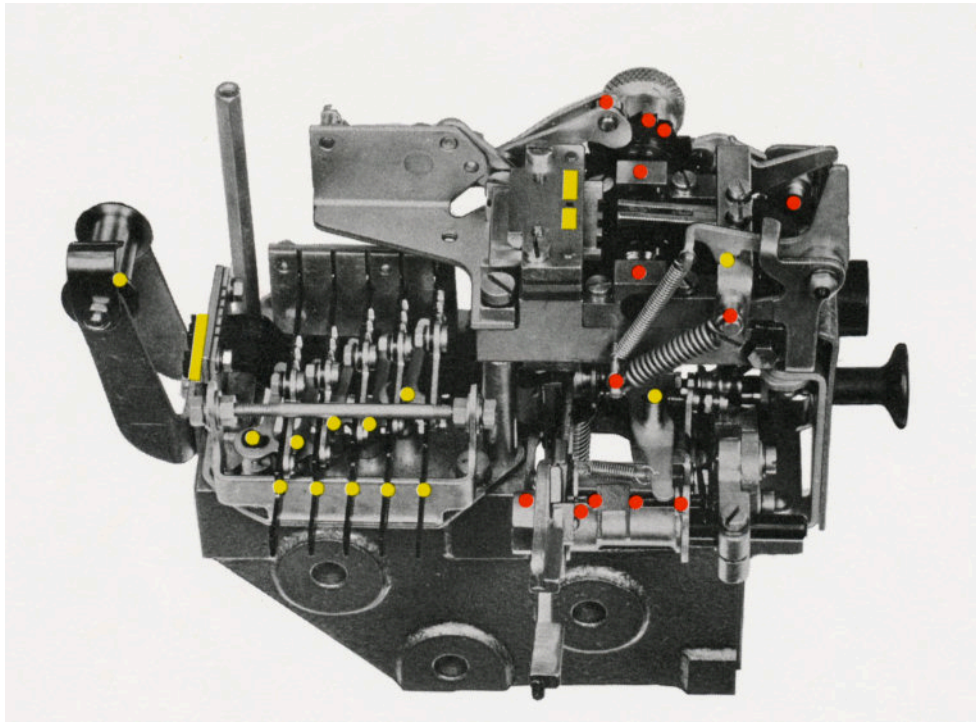

Fig. 3.11

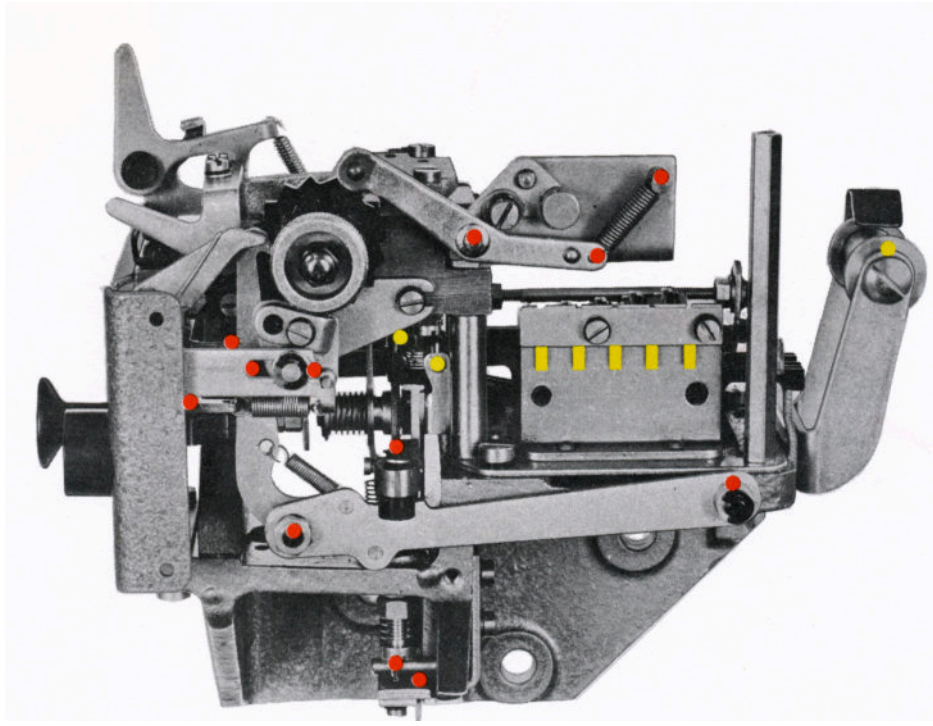

Fig. 3.12

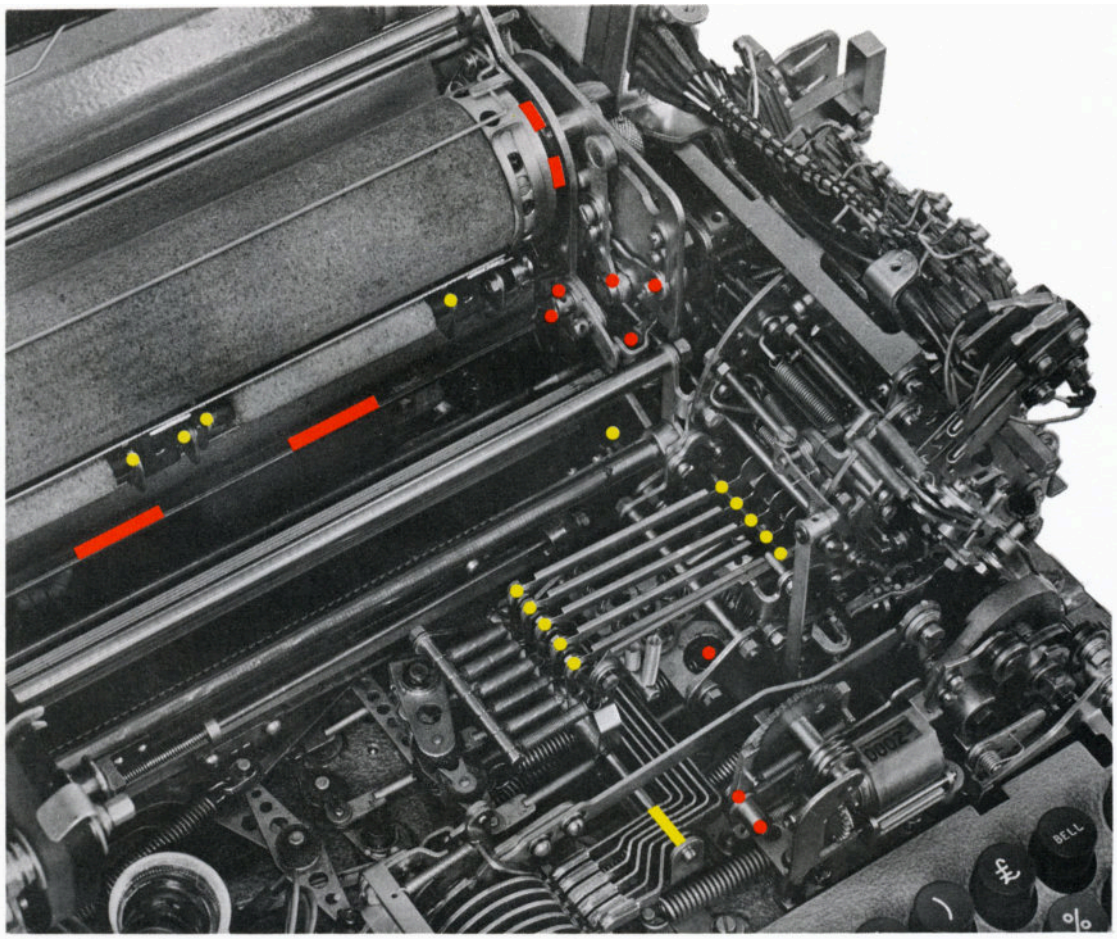


Fig. 3.13

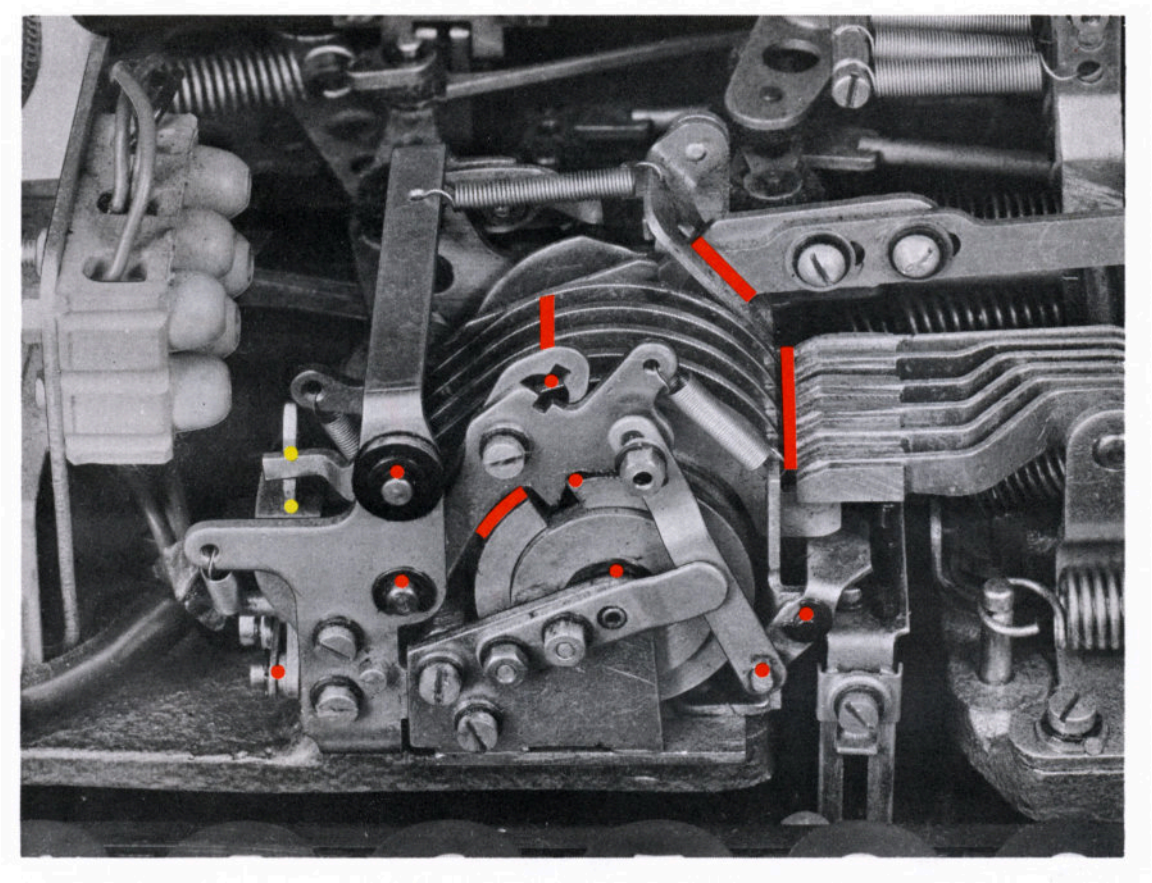

Fig. 3.14

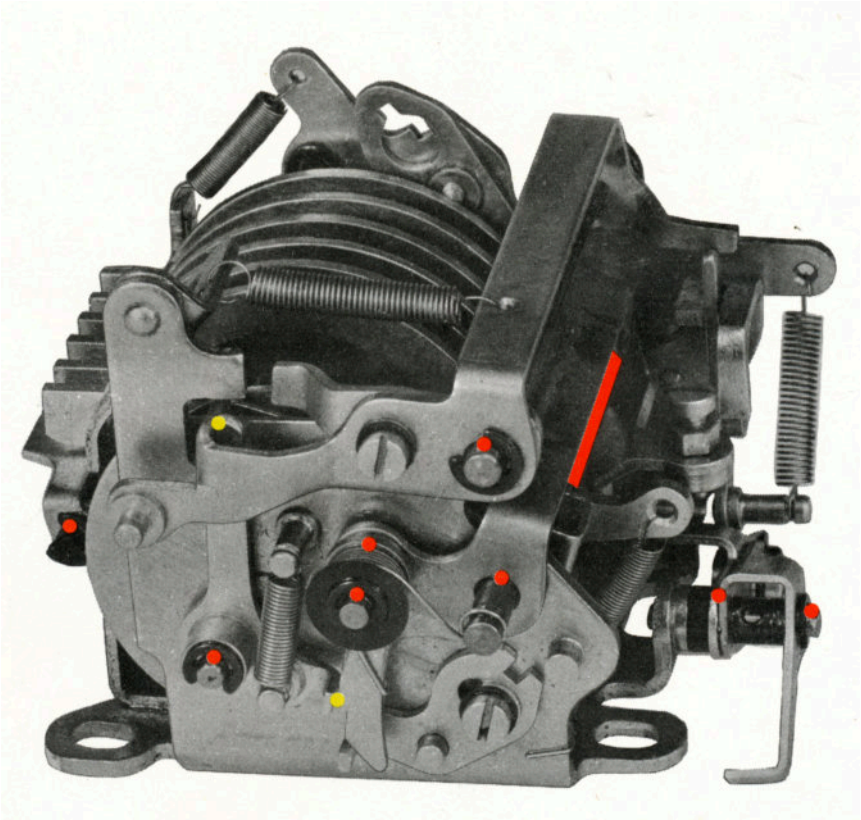

Fig. 3.15

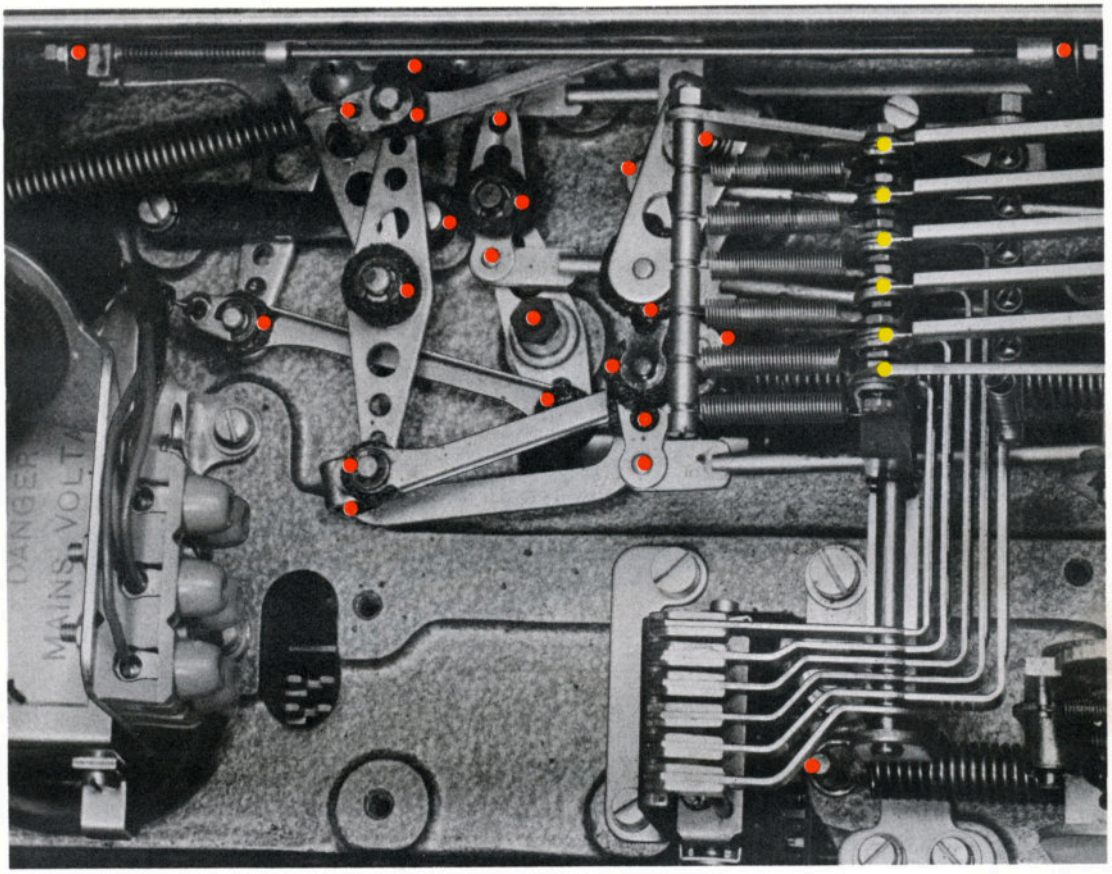


Fig. 3.16

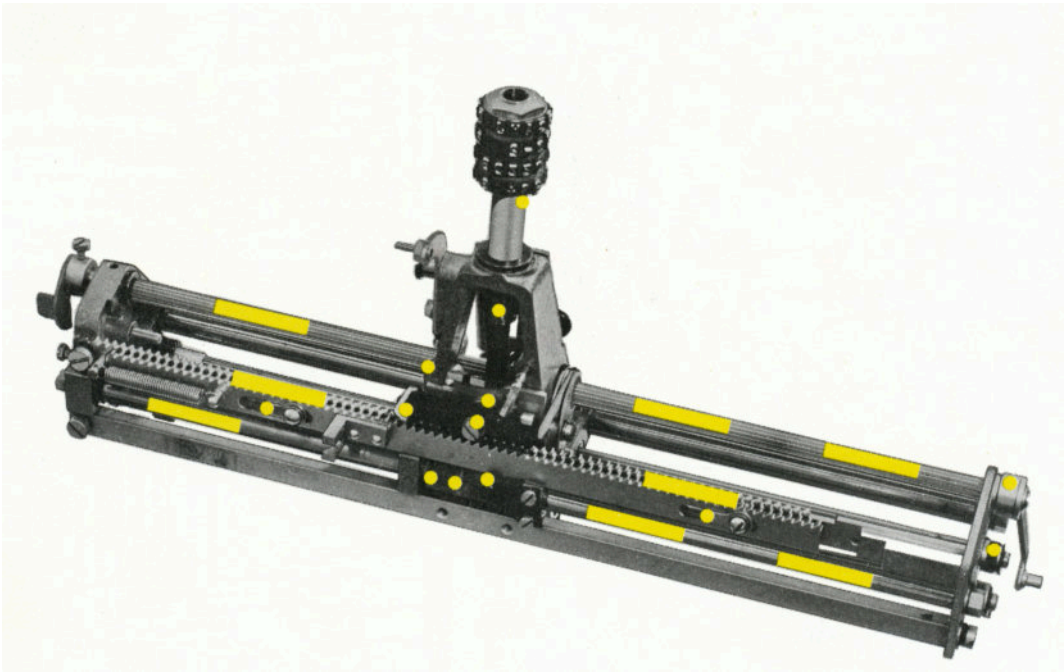

Fig. 3.17

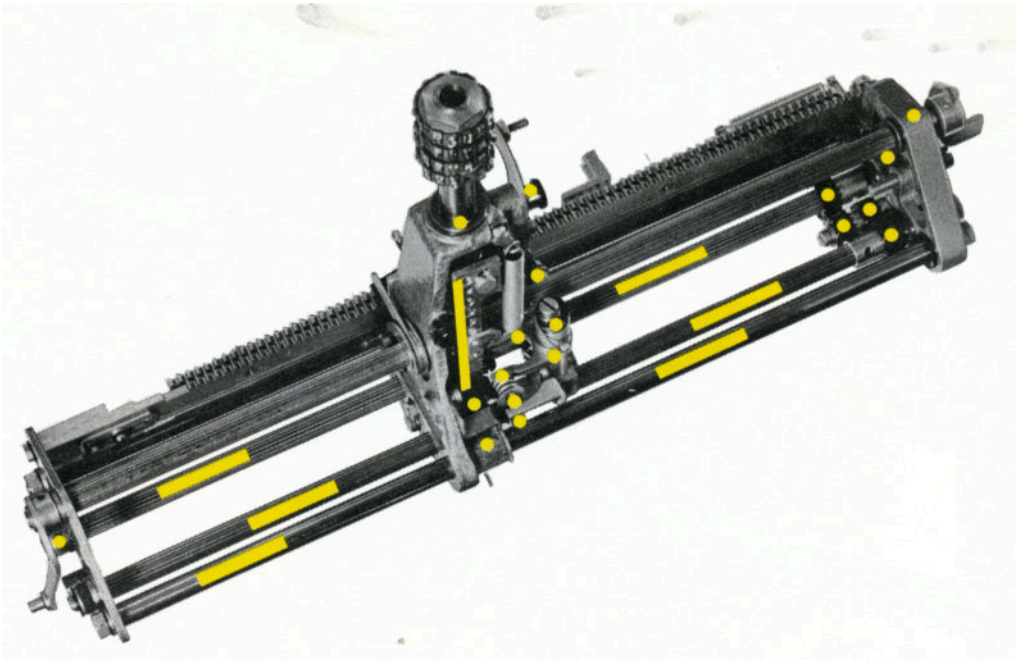

Fig. 3.18

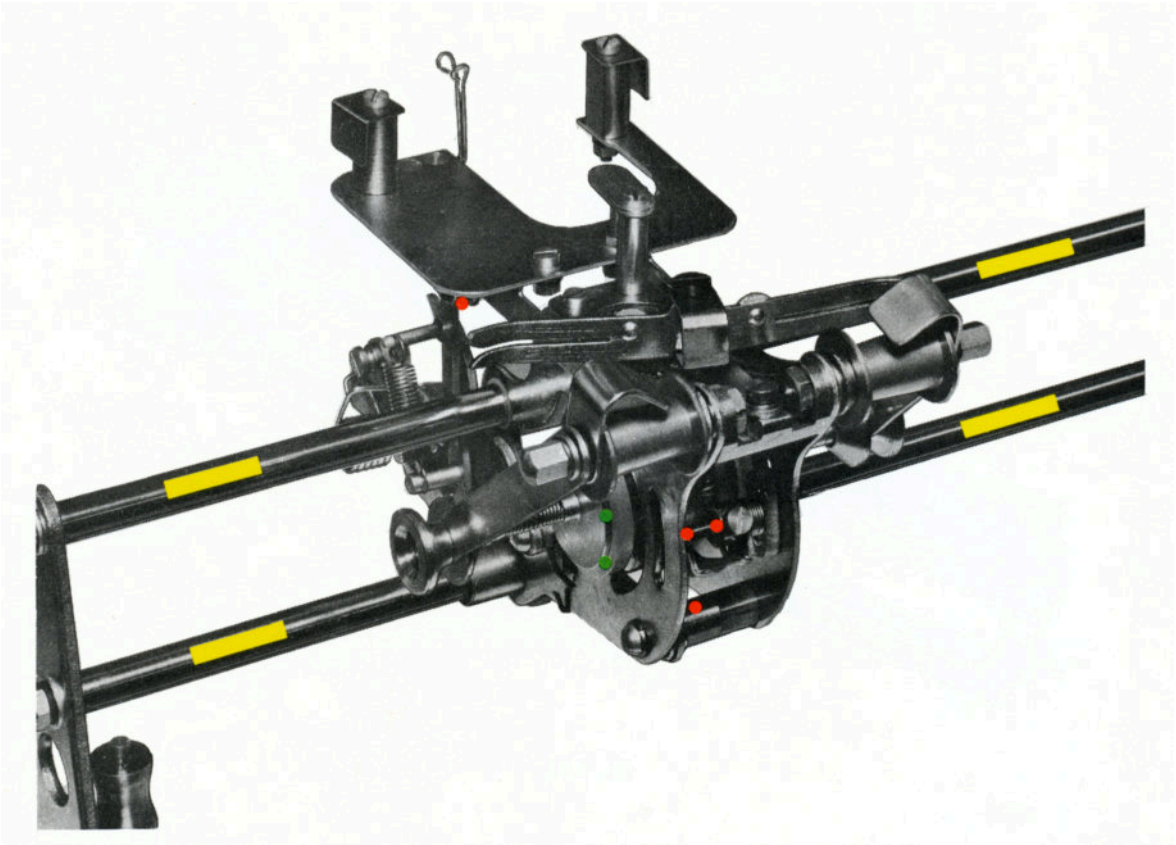

Fig. 3.19

Fig. 3.20

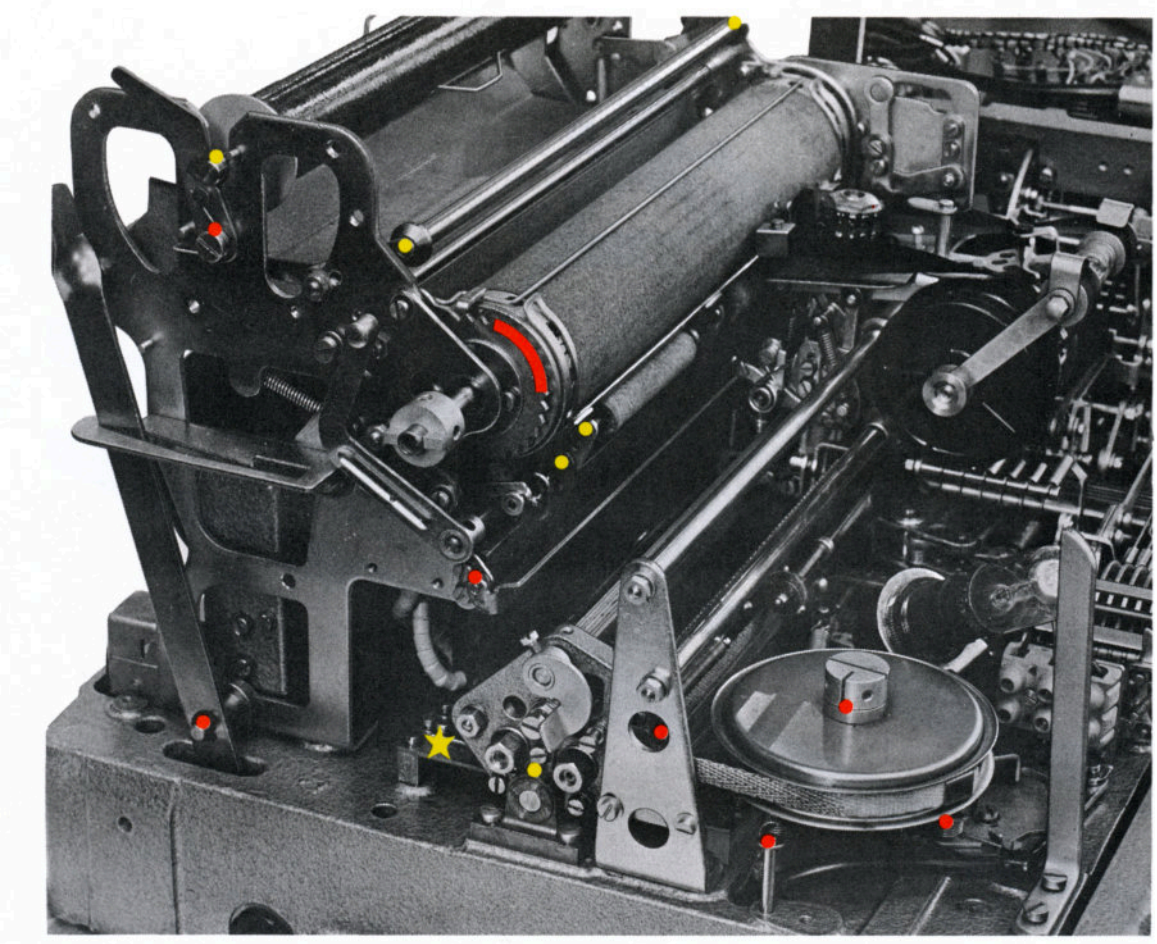

Fig. 3.21

★ Lubricate the teeth on the typehead lift rack.

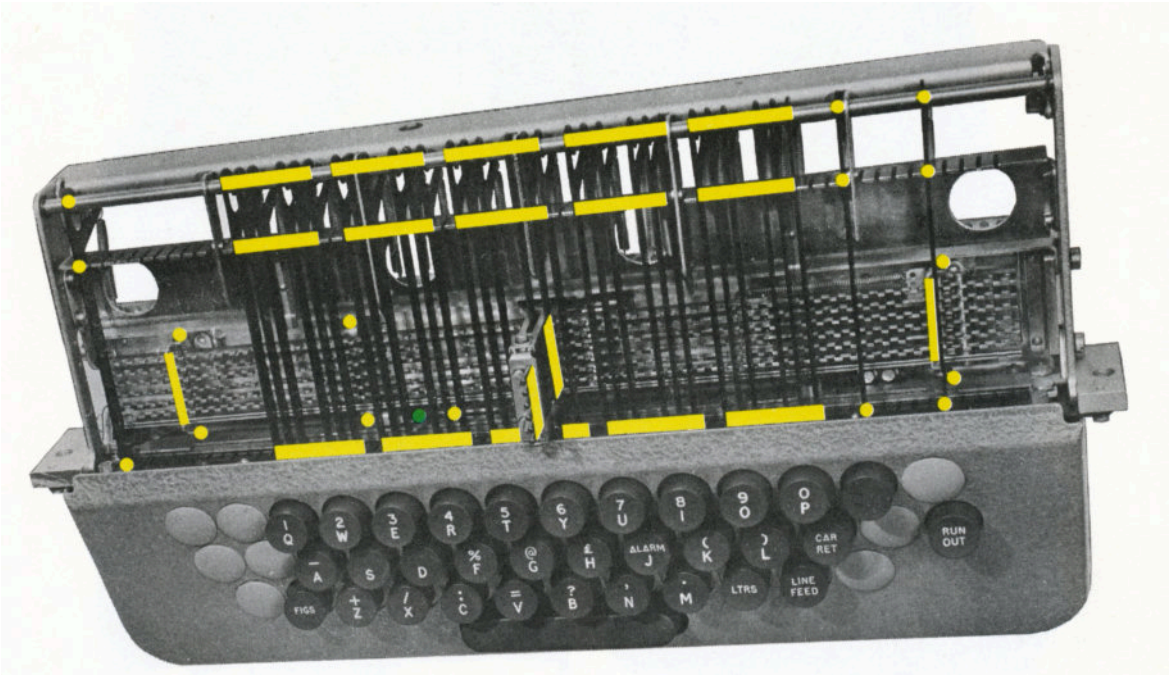
1 Q
2 W
3 E
4 R
5 T
6 Y
7 U
8 I
9 O
0 P
CAR RET
RUN OUT
ALARM
J
K
L
LINE FEED
LTRS
FIGS
Z
X
C
V
B
N
M

Fig. 3.22

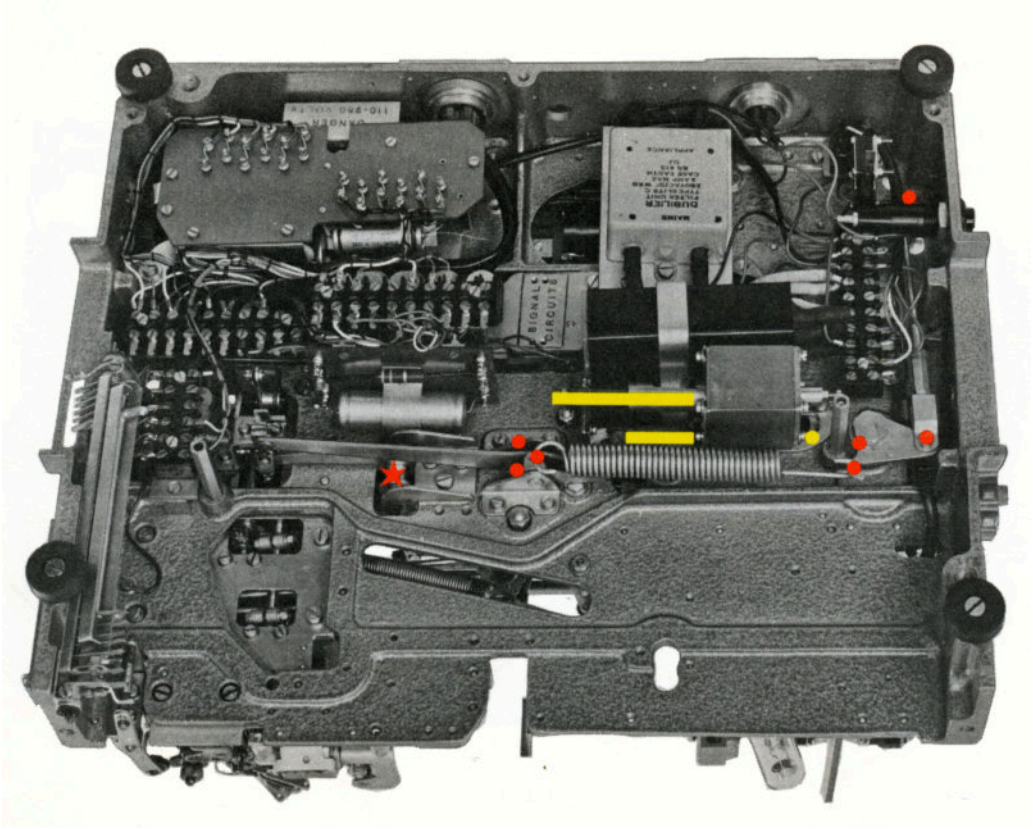

Fig. 3.23

★ Fill the oil hole in the top of the letter feed pivot.

# PART 4

## CONTENTS

## ADJUSTMENT INSTRUCTIONS


| | Page |
|---|---|
| 1. General | 1 |
| 2. Recommended Sequence of Adjustment and Reassembly | 1 |

SECTION 1

A. Electromagnet

| | |
|---|---|
| 1. Armature Stop Bracket | 3 |
| 2. Centralising Springs | 3 |

B. Translator Unit

| | |
|---|---|
| 3. Clutch Trigger Backstop Clearance. | 4 |
| 4. Clutch Abutment Engagement | 4 |
| 5. Function Bar Reset | 5 |
| 6. Print Release Lever | 5 |
| 7. Case Shift Lever - Vertical Position | 6 |
| 8. Case Shift Lever - Horizontal Position | 6 |
| 9. Non-Print Hook | 7 |
| 10. Letter Feed Latch | 8 |
| 11. Carriage Return Latch | 8 |

C. Selector Unit

| | |
|---|---|
| 12. Selector Drive Shaft End-Play | 9 |
| 13. Starter Switch - Operating Link | 10 |
| 14. Starter Switch Spindle | 11 |
| 15. Starter Switch Hold-out Lever | 11 |
| 16. Starter Switch Hold-out Bush | 12 |

D. Typehead Carriage Unit

| | |
|---|---|
| 17. Corrector Backstop | 12 |

E. Motor Unit

| | |
|---|---|
| 18. Governor Contacts Clearance | 13 |
| 19. Governor Contact Assembly Location | 14 |

F. Keyboard

| | |
|---|---|
| 20. Keybar/Combination Bar Clearance | 14 |
| 21. Trip Lever Pivot | 15 |
| 22. Push Rod Lift | 16 |

G. Transmitter Unit

| | |
|---|---|
| 23. Contact Springs | 16 |

H. Answer-Back Unit

| | |
|---|---|
| 24. Latch Trip Lever | 18 |
| 25. Lag Disc Clearance | 20 |
| 26. Release Lever Lift | 20 |
| 27. Release Lever Trip Arm Engagement | 22 |

SECTION 2

| | |
|---|---|
| 28. Translator Clutch | 23 |
| 29. Pin-Box Traverse Multiplying Lever | 23 |
| 30. Pecker Retention Arm | 24 |
| 31. Selector Detent Clearance | 25 |
| 32. Selector Camshaft Retention Lever | 26 |
| 33. Selector Clutch | 27 |
| 34. Selector Rockshaft End-Play | 28 |
| 35. Translator Trip Operating Lever Stop | 28 |
| 36. Translator Clutch Trip | 28 |
| 37. Starter Trip from Electromagnet | 29 |
| 38. Starter Trip from Translator Clutch | 29 |
| 39. Pecker/Code Selection Pin Clearance | 30 |
| 40. Pecker Traverse | 31 |
| 41. Carriage Return Pawl Lift | 32 |
| 42. Line Feed Lever Stop Plate | 32 |
| 43. Friction Feed Platen | 33 |
| 44. Sprocket Feed Platen | 34 |
| 45. Paper Guide Retainers | 36 |
| 46. Line Feed Pawl Overthrow Stops | 37 |
| 47. Platen Retention Pawl | 37 |
| 48. Typehead Carriage End-Play | 37 |
| 49. Typehead Carriage Stop Screw and Pawl Latch | 38 |
| 50. Feed and Retention Pawl Height | 39 |
| 51. Typehead Carriage Feed Link | 39 |
| 52. Carriage Return Spring | 40 |
| 53. Dashpot | 41 |
| 54. Print Spring | 41 |
| 55. Typehead/Platen Clearance | 42 |
| 56. Print Beam Stop Screw | 43 |
| 57. Typehead Corrector | 43 |
| 58. Typehead Corrector Track Rail | 44 |
| 59. Typehead Height-Initial Setting | 45 |
| 60. No.5 Aggregate Motion Lever | 45 |
| 61. No.4 Aggregate Motion Lever | 46 |
| 62. No.1 Aggregate Motion Lever | 46 |

# LIST OF ILLUSTRATIONS

## SECTION 1


Fig.4.1 Electromagnet
Fig.4.2 Translator Clutch Trigger Mechanism
Fig.4.3 Translator Clutch Abutment Mechanism
Fig.4.4 Function Bar Reset Mechanism
Fig.4.5 Print Release Mechanism
Fig.4.6 Case Shift Mechanism - Rear View
Fig.4.7 Non-Print Hook Mechanism
Fig.4.8 Letter Feed and Carriage Return Control Linkages
Fig.4.9 Selector Drive Shaft
Fig.4.10 Starter Switch - Operating Linkage
Fig.4.11 Starter Switch - Starter Pin/Worm Wheel Mechanism
Fig.4.12 Typehead Corrector Mechanism
Fig.4.13 Governor Contact Assembly
Fig.4.14 Keybar/Combination Bar Clearance
Fig.4.15 Keyboard Trip Mechanism
Fig.4.16 Keyboard - Underside View
Fig.4.17 Push Rod Lift
Fig.4.18 Transmitter Unit - Front View
Fig.4.19 Send-Receive Contacts
Fig.4.20 Answer-Back Latch Trip Lever - Vertical Clearance
Fig.4.21 Answer-Back Part-Cycle Condition
Fig.4.22 Answer-Back Lag Disc Clearance
Fig.4.23 Answer-Back Unit - Rear View
Fig.4.24 Answer-Back Trip Mechanism


## SECTION 2


Fig.4.25 Translator Clutch - Rear View
Fig.4.26 Pin-Box Traverse Action
Fig.4.27 Pecker Retention Arm Mechanism - Rear View
Fig.4.28 Selector Clutch Trigger Mechanism - Side View
Fig.4.29 Selector Clutch Trigger Mechanism - Plan View
Fig.4.30 Selector Clutch
Fig.4.31 Starter Trip from Electromagnet
Fig.4.32 Starter Trip Shaft Linkage
Fig.4.33 Pecker/Selection Pin Clearance
Fig.4.34 Pecker/Selection Pin Engagement
Fig.4.35 Feed and Retention Rack Clearances
Fig.4.36 Line Feed Operating Lever
Fig.4.37 Line Feed Ratchet Wheel Mechanism
Fig.4.38 Friction Feed Platen - Left-Hand End
Fig.4.39 Sprocket Feed Platen - Left-Hand End
Fig.4.40 Paper Guide Retainer
Fig.4.41 Ratchet Support Plate
Fig.4.42 Typehead Carriage - Left-Hand End
Fig.4.43 Typehead Retention Pawl
Fig.4.44 Typehead Carriage Feed Link
Fig.4.45 Carriage Return Spring Drum
Fig.4.46 Dashpot/Print Spring Mechanism
Fig.4.47 Print Beam/Print Shackle Linkage
Fig.4.48 Typehead/Platen Clearance
Fig.4.49 Typehead Corrector Mechanism
Fig.4.50 Typehead Corrector Track Rail
Fig.4.51 Typehead Carriage / Plan View
Fig.4.52 Push Rod/Aggregate Bellcrank Linkage - Rear View
Fig.4.53 Shift Rod/Shift Bellcrank Linkage - Rear View
Fig.4.54 Ribbon Spool Clearance
Fig.4.55 Ribbon Feed and Retention Pawls
Fig.4.56 Ribbon Jumper Arm


## SECTION 3


Fig.4.57 Combination Bar Reset Mechanism
Fig.4.58 Selector Bar/Selection Pin Alignment
Fig.4.59 Selector Bar/Selection Pin Clearance
Fig.4.60 Lag Weight Mechanism
Fig.4.61 Send-Receive Switch Delay Linkage
Fig.4.62 Send-Receive Switch Contacts


## SECTION 4


Fig.4.63 Telegraph Distortion Measuring Set, Type 6B
Fig.4.64 TDMS/Transmitter Connexions for Signals Length Check
Fig.4.65 Transmitter Lever/Cam Assembly
Fig.4.66 Transmitter Timing Disc, TA1316
Fig.4.67 Transmitter Lever/Camshaft Relationship
Fig.4.68 Speed-change Lever Positions
Fig.4.69 Typehead Lift Rack and Stop Block
Fig.4.70 Typehead Carriage - Plan View
Fig.4.71 Starter Switch Timing Mechanism
Fig.4.72 Bell Contact Operating Mechanism
Fig.4.73 Bell and WRU? Function Bars
Fig.4.74 Bell Contact Spring Assembly
Fig.4.75 Operation Counter


## SECTION 5


Fig.4.76 Selector Bar/Punch Mechanism
Fig.4.77 Selector Bar/Push Rod Linkage

Page

63. No.3 Aggregate Motion Lever ..... 47
64. Typehead Height - Preliminary Setting ..... 47
65. Ribbon Spool Damping ..... 48
66. Ribbon Spool Clearance ..... 49
67. Ribbon Unit Pawls ..... 49
68. Ribbon Jumper Arm ..... 50

SECTION 3

69. Keyboard Combination Bar Reset ... 51
70. Keyboard Trip Lever Pivot - Dynamic Check ..... 52
71. Selector Bar/Selection Pin Alignment ..... 52
72. Selector Bar/Selection Pin Clearance ..... 52
73. Lag Weight Release Lever Stop ..... 53
74. Lag Weight Trip ..... 54
75. Lag Weight Movement ..... 55
76. Translator Trip from Lag Weight ..... 55
77. Send-Receive Delay Lever Clearance ..... 56
78. Send-Receive Switch Contacts ..... 56
79. Send-Receive Contact Delay ..... 57
80. Send-Receive Contact Delay - Dynamic Check ..... 58

SECTION 4

81. Motor Speed ..... 60
82. Transmitter Contacts and Signals Length (TDMS) ..... 60
83. Transmitter Contacts and Signals Length (Timing Disc) ..... 64
84. Lag Weight Transit Timing ..... 68
85. Typehead Height - Final Setting .. 69
86. Carriage Return Button ..... 70
87. Dashpot - Dynamic Check ..... 70
88. Line Length Operating Stop ..... 70
89. Starter Switch Timing ..... 71
90. Bell and WRU? Contacts ..... 72
91. Operation Counter ..... 75

Page

SECTION 5

A. Reperforating Attachment

92. Selector Bar/Punch - Vertical Clearance ..... 77
93. Selector Bar/Punch - Horizontal Clearance ..... 77
94. Punch Withdrawal Plate ..... 78
95. Feed Hole Pitch - Initial Setting. 78
96. Feed Pawl Height ..... 80
97. Feed Pawl Engagement ..... 80
98. Reperforator Control Knob ..... 80
99. Reperforator Control Lever Stop Screw ..... 80
100. Reperforator Suppression from Bell and WRU? ..... 80
101. Throwout Lever Reset Chopper ..... 81
102. Tape Feed Latch ..... 82
103. Feed Hole Pitch - Final Setting .. 83
104. Tape Exhaust Alarm ..... 85

B. Answer-Back Unit

105. Keyboard Suppression ..... 85
106. Trip from Keyboard ..... 86
107. Vertical Trip Link ..... 87
108. Trip from Function Bar ..... 87
109. Transfer Lever Bracket ..... 89
110. Trip Link Stop Screw ..... 89
111. Feed Pawl ..... 89
112. Feed Pawl Stop ..... 89

C. End-of-Line Indicator

113. Trip Mechanism ..... 90

D. Automatic Carriage-Return/Line Feed

114. Line Length ..... 91

E. Two-Colour Printing

115. Operating Check and Setting-Up Procedure ..... 92

Fig.4.78 Feed Lever Mechanism
Fig.4.79 Tape Feed Mechanism
Fig.4.80 Reperforator ON/OFF Control Linkage
Fig.4.81 Throwout Lever Mechanism
Fig.4.82 Tape Guide and Latch Mechanism
Fig.4.83 Tape Exhaust Alarm
Fig.4.84 Push Rod Suppressor/Push Rod Clearances
Fig.4.85 Answer-Back Trip Mechanism
Fig.4.86 Answer-Back Unit - Rear View
Fig.4.87 Vertical Trip Link/Transfer Lever Clearance
Fig.4.88 Trip Arm/WRU? Function Bar Clearance
Fig.4.89 Answer-Back Feed Mechanism
Fig.4.90 End-of-Line Indicator Trip Mechanism
Fig.4.91 Automatic Carriage-Return/Line-Feed Mechanism
Fig.4.92 Two-Colour Printing - Latch Mechanism
Fig.4.93 Two-Colour Printing - Lift Link Mechanism
Fig.4.94 Adjustment Interlock Chart

# PART 4

# ADJUSTMENT INSTRUCTIONS

## 1. GENERAL

The adjustments for the Model Seventy-five teleprinter are presented in the sequence recommended for adjusting and reassembling a machine after it has been completely overhauled. If, however, the machine requires only one or two functional adjustments to remedy a fault condition or after a new part has been fitted, it will not always be necessary to follow this sequence. Since many of these adjustments can affect others, the service engineer is advised to consult the Adjustment Interlock Chart, Fig.4.94, when carrying out isolated adjustments.

In the following instructions, unless otherwise stated, the machine is assumed to be in the rest condition, i.e.

(a) with the translator and selector clutches latched against their detents,

(b) with the translator and selector unit camshafts located by their respective retention rollers and

(c) with all pins in the pin-box fully withdrawn and the selector code plates down.

- Always remember that when the machine is connected to line and power is switched on, an incoming signal from the distant station will start up the machine. Before attempting any adjustment that requires putting your fingers near moving parts, therefore, DISCONNECT THE SIGNAL CORD FROM THE LINE.

- Before tilting the machine on its back to carry out an adjustment, remove the signal and power sockets from the rear of the machine main base. It is also advisable to support the motor with a packing piece, such as an ink ribbon container.

- In the following instructions, occasional adjustments will be found with the symbol † against their numerical headings. This symbol denotes a warning to engineers that, if they wish to carry out this adjustment out of its recommended sequence, it may first be necessary to remove another unit in order to gain access to the components to be adjusted.

## 2. RECOMMENDED SEQUENCE OF ADJUSTMENT AND REASSEMBLY

(a) Carry out Section 1 of the Adjustment Instructions. These are adjustments to individual units which must be completed before these units are reassembled to the machine main base.

(b) Reassemble the following units to the machine main base.

Electromagnet
Translator Unit
Selector Unit
Aggregate Motion Unit
Typehead Carriage Unit
End-of-Line Indicator and Carriage Return Spring Drum
Ribbon Unit
Motor Unit
Platen Unit

(c) Complete Section 2 of the Adjustment Instructions. These adjustments bring the receiver-only mechanism into a condition in which the motor can safely be switched on.

(d) Reassemble the following units to the machine main base.

Keyboard
Selector Frames Unit
Answer-Back Unit

(e) Complete Section 3 of the Adjustment Instructions. These adjustments bring the transmitter mechanism into a condition in which the motor can safely be switched on.

(f) Reassemble the following units to the machine.

Transmitter Unit
Operation Counter

(g) Complete Section 4 of the Adjustment Instructions. These are functional adjustments under power.

(h) Reassemble the Reperforating Attachment to the machine main base.

(j) Complete Section 5 of the Adjustment Instructions. These are adjustments for the optional attachments.

# SECTION I

## A. ELECTROMAGNET

### 1. ARMATURE STOP BRACKET

Check

1.1 Disconnect the centralising springs, Fig.4.1, from the armature. Apply a tension gauge to the armature block and check that the force necessary to move the armature from side to side is between 6 and 8 ounces (170-227 grammes), and that the forces in the two directions do not differ by more than 1 ounce (28 grammes). If no adjustment is required, connect the centralising springs.

Action

1.2 To adjust, slacken the screws securing the armature stop bracket and reposition the bracket until both conditions are satisfied. Tighten the stop bracket securing screws and connect the centralising springs.

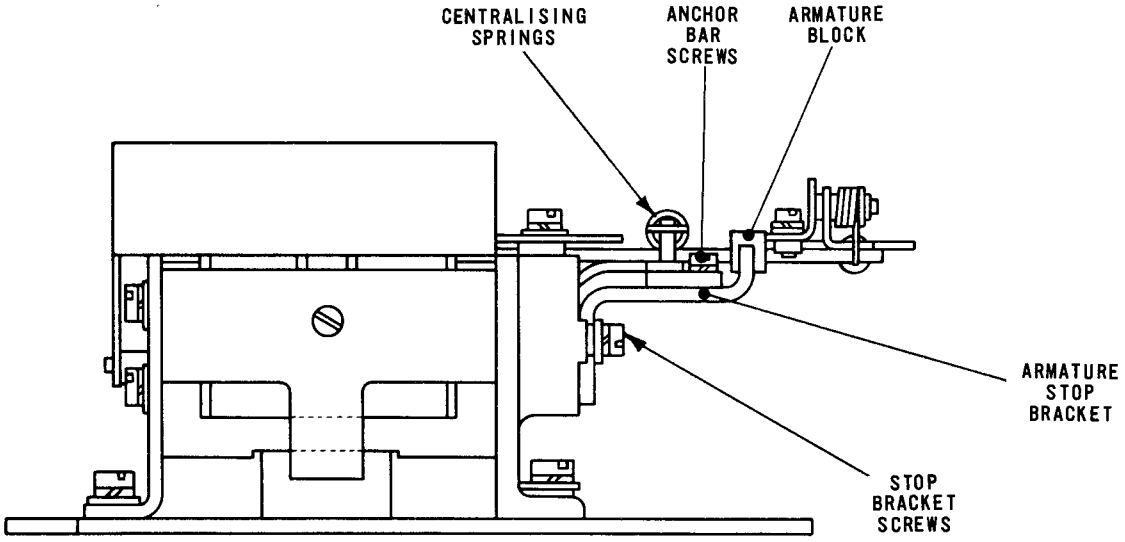


Fig. 4.1 ELECTROMAGNET

### 2. CENTRALISING SPRINGS

Check

2.1 Apply a tension gauge to the end of the armature, Fig.4.1, and check that a force of 1½-3 ounces (43-85 grammes) is now sufficient to move the armature from side to side, and that the forces in the two directions do not differ by more than ½ ounce (14 grammes).

Action

2.2 To adjust, slacken the screws securing the anchor bar and reposition the bar by means of its screwdriver slot until both conditions are satisfied. Tighten the anchor bar securing screws.

## B. TRANSLATOR UNIT

### 3. CLUTCH TRIGGER BACKSTOP CLEARANCE

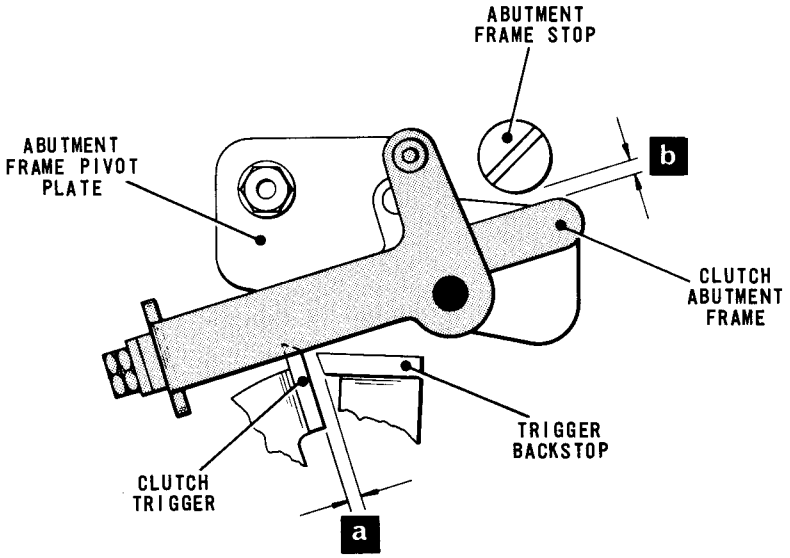


Fig. 4.2 TRANSLATOR CLUTCH TRIGGER MECHANISM

Check

3.1 With the translator camshaft in the rest condition and the retention lever roller located in its recess in the retention cam, check that there is a clearance of .010 – .020 in. (dimension 'a') between the clutch trigger, Fig.4.2, and the trigger backstop.

Action

3.2 To adjust, slacken the nuts securing the clutch abutment frame pivot plate and reposition the plate until the correct clearance is obtained. Tighten the plate securing nuts.

### 4. CLUTCH ABUTMENT ENGAGEMENT

Check

4.1 With the translator camshaft in the rest condition and the retention lever roller located in its recess in the retention cam, insert a .022 in. feeler gauge between the tail of the clutch abutment frame, Fig.4.2, and its eccentric stop (i.e. set up dimension 'b'). Check that this action does not cause the clutch to trip.

4.2 Withdraw the .022 in. feeler gauge and replace with a .028 in. gauge. Check that this action causes the clutch to trip. Remove the gauge.

Action

4.3 To adjust, slacken the nut clamping the eccentric stop, Fig.4.3, and turn the stop for maximum depth of engagement between the abutment and the trigger. Insert a .025 in. gauge between the tail of the abutment frame and its eccentric stop,

and turn the eccentric until the clutch **just** trips. Remove the gauge and clamp the eccentric stop with its nut.

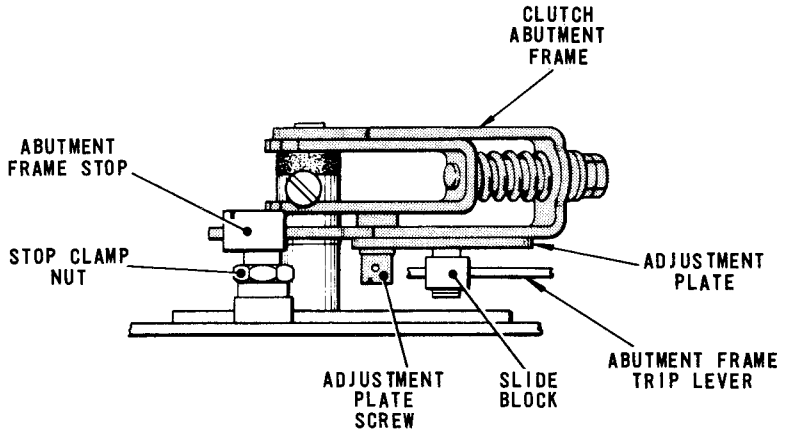


Fig. 4.3 TRANSLATOR CLUTCH ABUTMENT MECHANISM

## 5. FUNCTION BAR RESET

Check

5.1 Ensure that the translator camshaft is in the rest position and check that there is a clearance of .015 - .030 in. (dimension 'c') between the projections on the function bars, Fig.4.4, and the selector code plates.

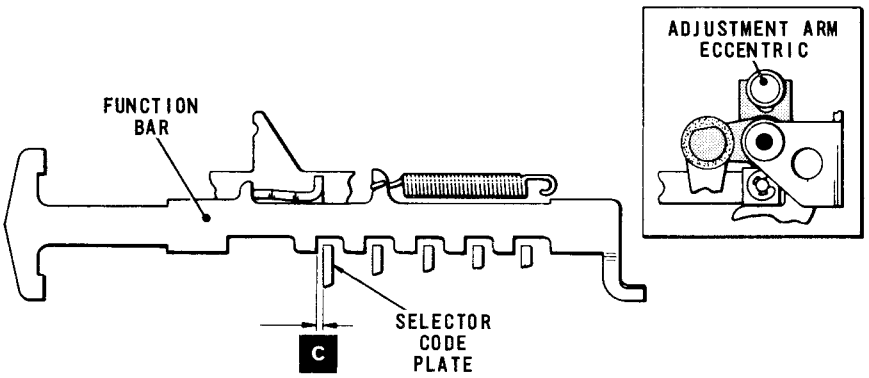


Fig. 4.4 FUNCTION BAR RESET MECHANISM

Action

5.2 If this is not so, slacken the nut clamping the adjustment arm eccentric (inset) and reposition the eccentric until dimension 'c' is satisfied. Clamp the eccentric in this position with its nut.

## 6. PRINT RELEASE LEVER

Check

6.1 With the translator camshaft in the rest position, check that the function bars, Fig.4.5, are centrally positioned with respect to their corresponding slots in

the print release lever. This can be done by observing any visible function bar and checking that the right-hand side of the bar is clear of its corresponding slot by .020 - .026 in. (dimension 'd').

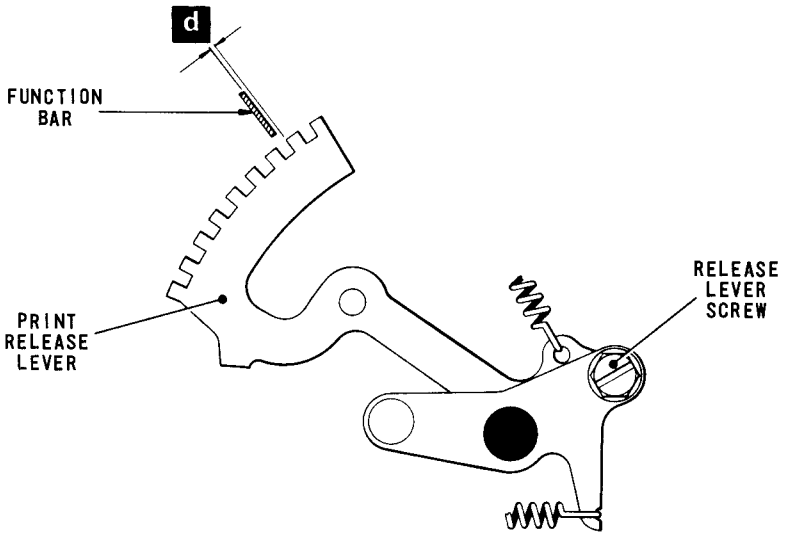


Fig. 4.5 PRINT RELEASE MECHANISM

Action

6.2 To adjust, slacken the screw securing the print release lever until it is friction tight and reposition the lever until dimension 'd' is obtained. Tighten the lever securing screw.

## 7. CASE SHIFT LEVER - VERTICAL POSITION

Check

7.1 With the translator camshaft in the rest condition, move the shift lever, Fig. 4.6, to the letters position, i.e. to the right, and check that there is now a vertical clearance of .050 - .060 in. (dimension 'e' - inset) between the top edge of the shift latch and the bottom edge of the shift bellcrank.

Action

7.2 To adjust, slacken the two nuts securing the adjustment plate and reposition the plate until dimension 'e' is set up. Tighten the securing nuts.

## 8. CASE SHIFT LEVER - HORIZONTAL POSITION

Check

8.1 Ensure that all the pins in the pin-box are fully withdrawn. Lift the translator clutch abutment and turn the camshaft by hand until the function bars move towards the rear. Move the shift lever, Fig. 4.6, alternately from Letters to Figures shift and check that in either position there is a minimum clearance of .010 in. between the operating surfaces of the shift lever and the tails of the Letters and Figures function bars. Check also that the two clearances are approximately equal.

8.2 Move the shift lever to the Figures position, i.e. to the left, and check that there is a minimum clearance of .010 in. (dimension 'f') between the shift latch and the tip of the shift bellcrank.

8.3 Move the shift lever to the Letters position and check that there is a minimum shift latch/shift bellcrank engagement of .045 in. (dimension 'g' - inset).

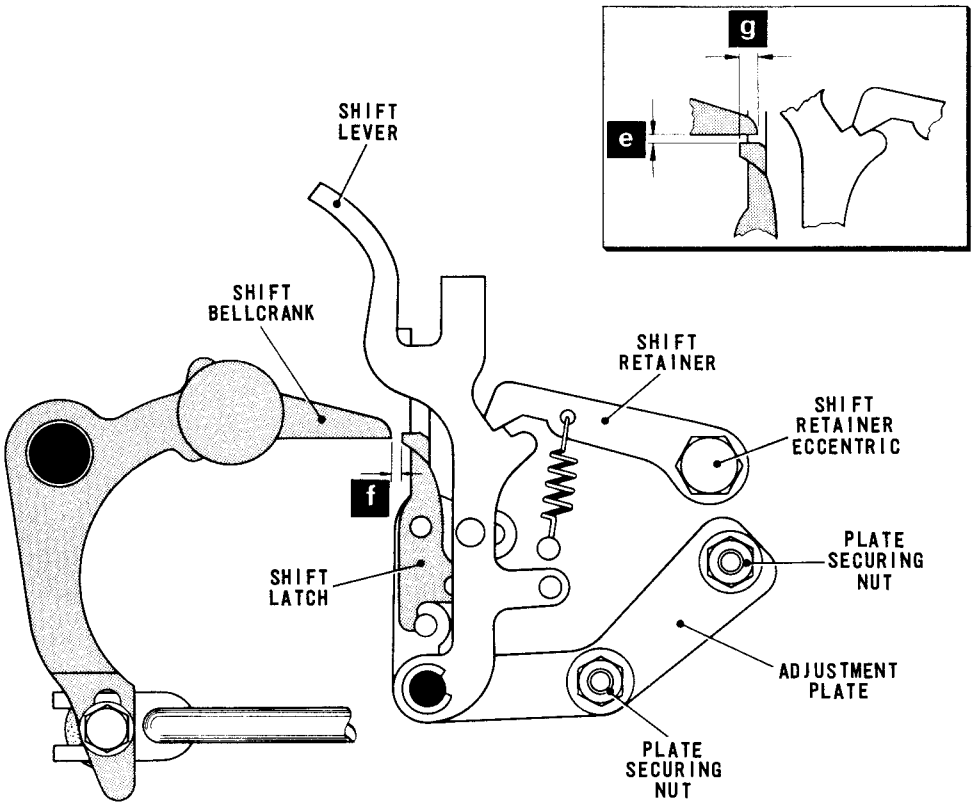


Fig. 4.6 CASE SHIFT MECHANISM—REAR VIEW

8.4 Set up the Figures (MMSMM) and Letters (MMMMM) combinations in turn, lift the translator clutch abutment and turn the camshaft by hand. Check that the function bars move the shift lever from one condition to the other.

Action

8.5 If any of the above conditions are not present, slacken the nut securing the shift retainer eccentric and reposition the retainer by turning its eccentric until all four conditions are satisfied. Tighten the eccentric securing nut.

## 9. NON-PRINT HOOK

Check

9.1 Set up any **printing** character in the pin-box, lift the translator clutch abutment and turn the camshaft by hand until the print release lever, Fig.4.5, drops. Check that there is a minimum horizontal clearance of .030 in. (dimension 'h') between the end of the print lever, Fig.4.7, and the step of the print hook.

9.2 Set up any **non-printing** character in the pin-box, lift the translator clutch abutment and turn the camshaft by hand until the hook engages the print lever. Check that this engagement is at least .045 in. (dimension 'j' - inset).

Action

9.3 To adjust, slacken the hook clamp screw and turn the clamp until the correct conditions are set up. Tighten the screw.

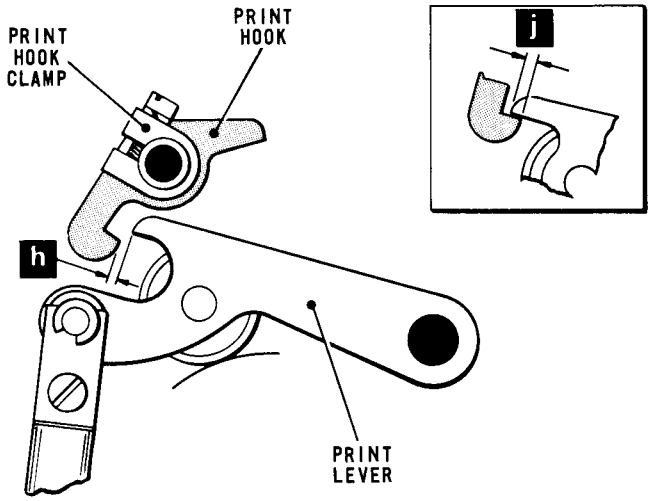


Fig. 4.7 NON-PRINT HOOK MECHANISM

## 10. LETTER FEED LATCH

Check

10.1 Lift the translator clutch abutment and turn the camshaft by hand until the letter feed operating lever, Fig.4.8, is fully raised. Hold the letter feed lever abutment against the lower guide rack and push the letter feed latch inwards. Check that the latch passes beneath the shoe on the operating lever by .015 – .025 in. (dimension 'k').

Action

10.2 To adjust, slacken the screw securing the lever abutment and reposition the abutment until the correct clearance is obtained. Tighten the screw.

Check

10.3 Set up any **non-feed** combination on the pin-box, hold the lever abutment against the lower guide rack and lift the translator clutch abutment. Turn the camshaft by hand and check that as the operating lever falls, it clears the step on the latch by .015 – .030 in. (dimension 'l' – inset).

Action

10.4 To adjust, slacken the letter feed arm clamp screw and reposition the latch until dimension 'l' is set up. Tighten the clamp screw.

## 11. CARRIAGE RETURN LATCH

Check

11.1 With the translator camshaft in the rest position, press the carriage return driving block, Fig.4.8, down on its retaining plate. Push the lower end of the carriage return latch inwards and check that its latching face passes over the shoe of the carriage return operating lever with a clearance of approximately .030 in. (dimension 'm').

Action

11.2 If this is not so, slacken the screw securing the driving block and reposition the block until dimension 'm' is satisfied. Tighten the screw.

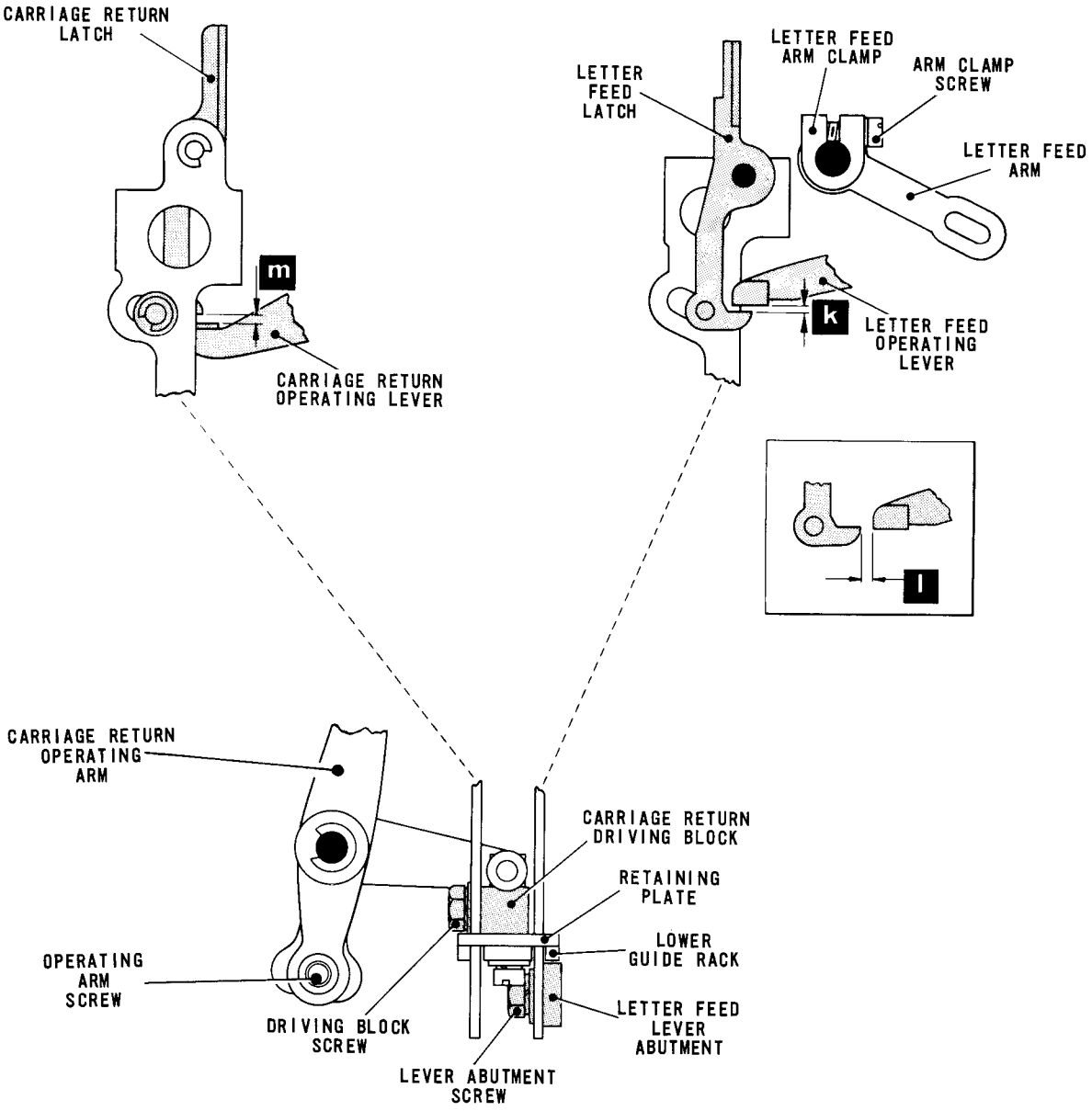


Fig. 4.8 LETTER FEED AND CARRIAGE RETURN CONTROL LINKAGES

## C. SELECTOR UNIT

### 12. SELECTOR DRIVE SHAFT END-PLAY

Check

12.1 Check that the selector drive shaft, Fig. 4.9, is free to turn and that its end-play does not exceed .003 in.

Action

12.2 To adjust, remove the outer nut and its washer, slacken the locknut and turn the special square nut located in the collar until the correct end-play is

present. Clamp the square nut with its locknut and refit the outer nut and its washer.

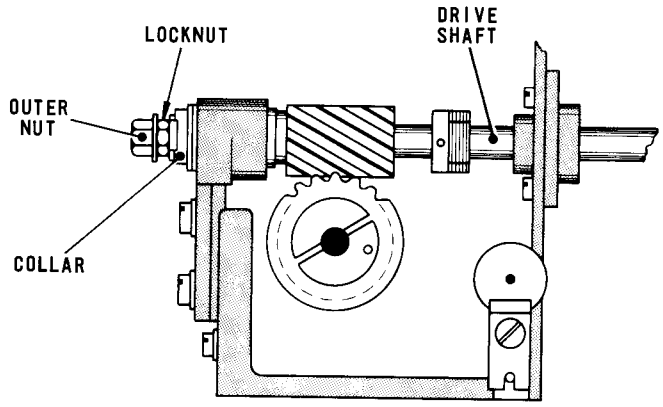


Fig. 4.9 SELECTOR DRIVE SHAFT

## 13. STARTER SWITCH-OPERATING LINK

Check

13.1 Disengage the starter arm pin, Fig.4.11, from the worm wheel. Depress the starter arm as far as it will go so that the starter lever, Fig.4.10, is fully down. Check that there is now an engagement of .015 - .030 in. (dimension 'n') between the bottom end of the starter operating link and the peg on the rock-shaft.

13.2 Release the starter arm and allow the lever to restore to its uppermost position. Check that there is now a clearance of .015 - .030 in. (dimension 'p' - inset) between the link and the peg.

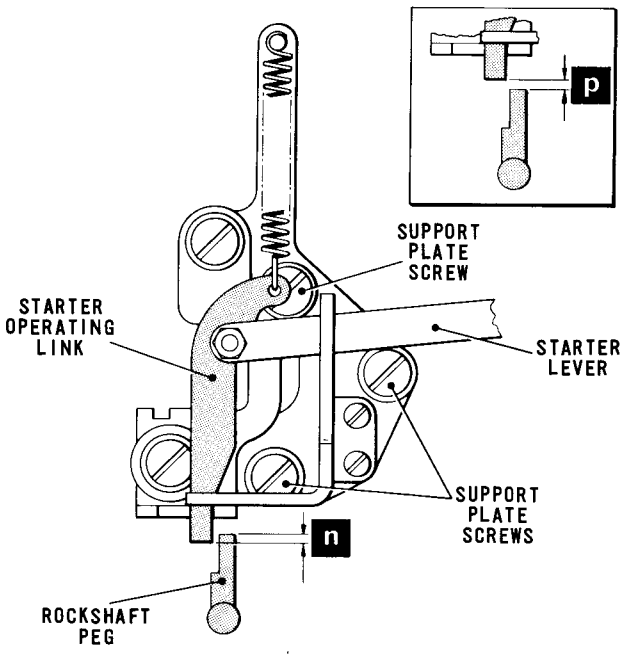


Fig. 4.10 STARTER SWITCH-OPERATING LINKAGE

Action

13.3 To adjust, slacken the three screws securing the support plate and reposition the plate by means of its screwdriver slot until both the above conditions are satisfied. Tighten the screws.

## 14. STARTER SWITCH SPINDLE

Check

14.1 With the starter arm pin, Fig.4.11, fully engaged with the worm wheel, check that the left-hand end of the starter spindle protrudes through its bearing bracket by .015 - .030 in. (dimension 'q').

Action

14.2 To adjust, slacken the screw clamping the starter arm until friction tight and, holding the pin in engagement with the worm wheel, reposition the starter spindle to achieve dimension 'q'. Tighten the clamp screw.

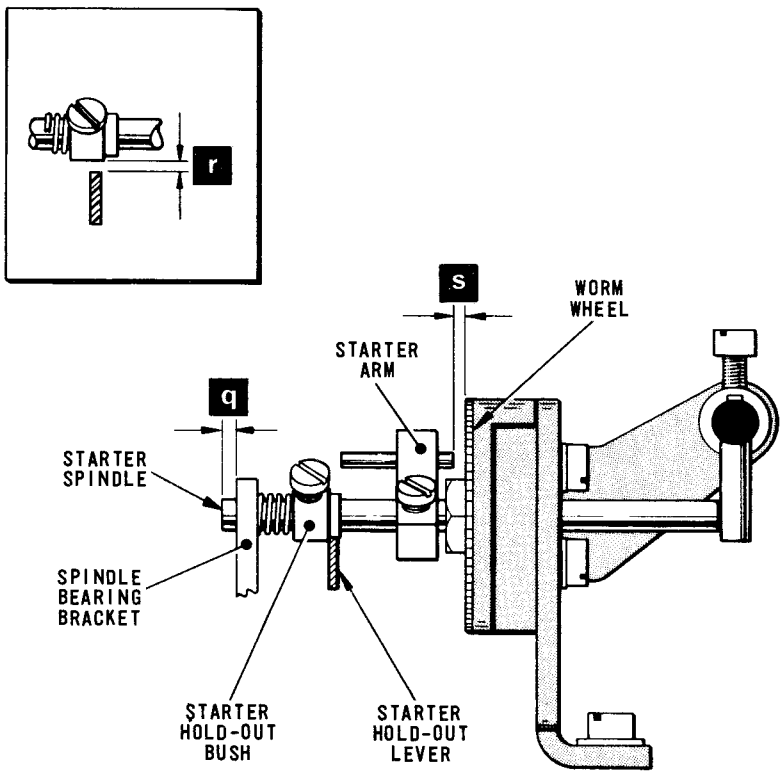


Fig. 4.11 STARTER SWITCH-STARTER PIN/WORM WHEEL MECHANISM

## 15. STARTER SWITCH HOLD-OUT LEVER

Check

15.1 With the starter lever, Fig.4.10, in its uppermost position and with the starter arm pin, Fig.4.11, engaged in the worm wheel, check that the end of the starter hold-out lever is clear of the larger diameter of the shouldered bush by .004 - .008 in. (dimension 'r' - inset).

Action

15.2 If this is not so, slacken the nut clamping the eccentric backstop of the hold-out lever and rotate the backstop until dimension 'r' is set up. Tighten the clamp nut.

## 16. STARTER SWITCH HOLD-OUT BUSH

Check

16.1 Disengage the starter arm pin, Fig.4.11, from the worm wheel and depress the starter arm as far as it will go. Check that the hold-out lever is now located against the shoulder of the bush, as shown in the figure, and that there is a clearance of .005 - .010 in. (dimension 's') between the end of the pin and the worm wheel.

Action

16.2 To adjust, slacken the screw clamping the bush and slide the bush along the starter spindle until both conditions are satisfied. Tighten the clamp screw.

## D. TYPEHEAD CARRIAGE UNIT

## 17. CORRECTOR BACKSTOP

Check

17.1 Press the corrector lever, Fig.4.12, into full engagement with the corrector wheel and check that the type in the printing position is parallel to the rear edge of the typehead unit casting.

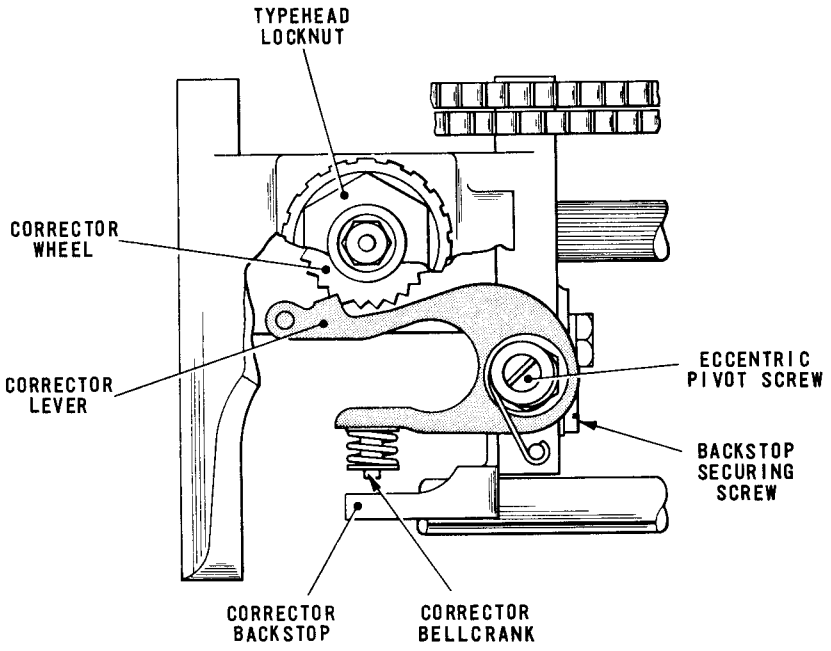


Fig. 4.12 TYPEHEAD CORRECTOR MECHANISM

17.2 Insert a .015 in. feeler gauge between the corrector backstop and the corrector bellcrank and check that it is possible to turn the typehead without interference from the corrector lever.

17.3 Replace the .015 in. feeler gauge with a .025 in. gauge. Rotate the typehead again and check that the corrector lever now touches the teeth of the wheel. Remove the gauge.

Action

17.4 If these conditions are not satisfied, carry out the following procedure.

(a) Slacken the screw securing the eccentric pivot of the corrector lever and turn the eccentric to its mid-position, using that half of its throw which is towards the rear of the machine. Tighten the pivot securing screw.

(b) Slacken the locknut securing the typehead and turn the typehead slightly to satisfy Check 17.1. Tighten the locknut.

(c) Slacken the screw securing the corrector backstop and reposition the backstop until Checks 17.2 and 17.3 are satisfied. Tighten the backstop securing screw.

## E. MOTOR UNIT

### 18. GOVERNOR CONTACTS CLEARANCE

Check

18.1 Remove the screws securing the contacts cover, Fig.4.13, and take off the cover. Push the contact peg and contact arm inwards towards the motor to remove any contact peg pressure from the contacts. Check that there is now a clearance of .025 in. between the contacts.

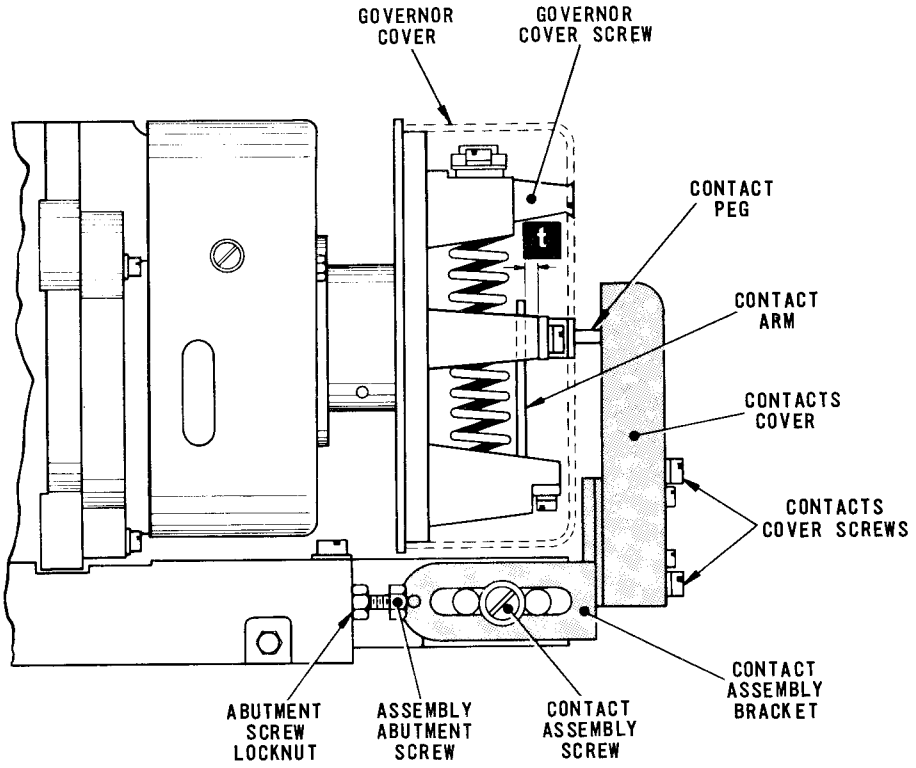


Fig. 4.13 GOVERNOR CONTACT ASSEMBLY

Action

18.2 To adjust, set the contact blade until the correct clearance is obtained. Refit the contacts cover and secure it with its screws.

## 19. GOVERNOR CONTACT ASSEMBLY LOCATION

Check

19.1 Remove the screw securing the governor contact assembly, Fig.4.13, and lift off the assembly, taking care not to lose the contact peg. Remove the screw securing the governor cover and take off the cover.

19.2 Refit the contact assembly to the motor base, ensuring that the contact peg is correctly located between its recesses in the governor contact blade and the contact arm. With the contact assembly located against its abutment screw, check that there is a clearance of .042 - .052 in. (dimension 't') between the contact arm and the plate carrying the pin retaining bush.

Action

19.3 If this is not so, slacken the abutment screw locknut and turn the abutment screw as far as it will go towards the casting. Slacken the screw securing the contact assembly and slide the assembly on its pins until the correct clearance is obtained. Tighten the screw securing the assembly and turn the abutment screw until it touches the pin on the contact assembly bracket. Clamp the abutment in this position with its locknut.

19.4 Slacken the screw securing the contact assembly and withdraw the assembly. Refit the governor cover and secure it with its screw. Refit the contact assembly and tighten its securing screw.

## F. KEYBOARD

## 20. KEYBAR/COMBINATION BAR CLEARANCE

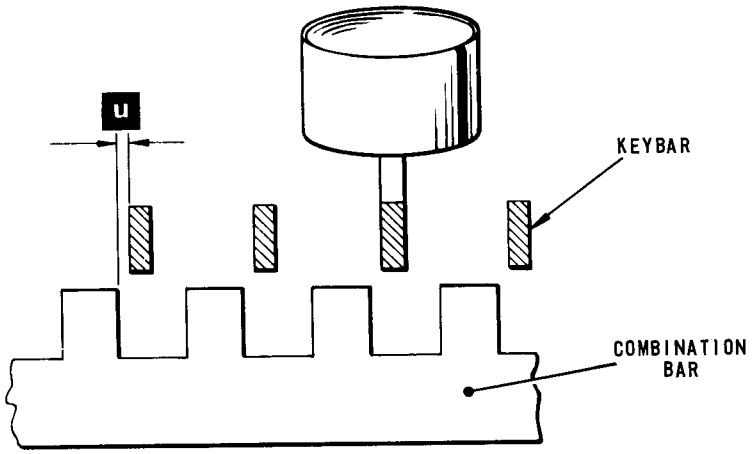


Fig. 4.14 KEYBAR/COMBINATION BAR CLEARANCE

Check

20.1 With the keyboard in the reset condition, i.e. with the combination bars, Fig.4.14, latched back, check that there is a horizontal clearance of

.010 – .020 in. (dimension 'u') between the teeth of the combination bars and the left-hand faces of the keybars. Check also that it is possible to depress the Run-out key without interference from the combination bars.

Action

20.2 If these conditions are not present, ensure that all the keybars are straight and parallel to each other. Slacken the four screws securing the trip mechanism base plate, Fig. 4.16, and alter the rest position of the combination bars by repositioning the trip mechanism, Fig. 4.15. When both conditions have been met, tighten the four base plate screws.

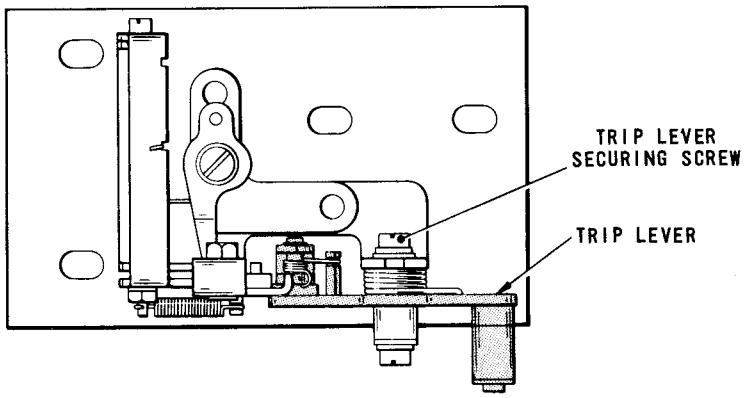


Fig. 4.15 KEYBOARD TRIP MECHANISM

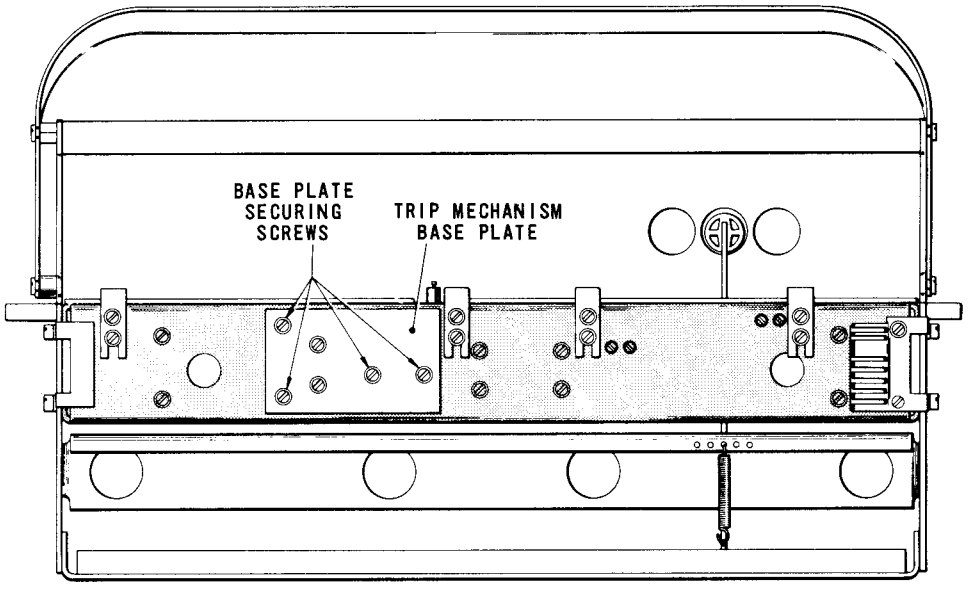


Fig. 4.16 KEYBOARD—UNDERSIDE VIEW

## 21. TRIP LEVER PIVOT

Check

21.1 With the keyboard in the reset condition, depress a central printing key slowly and check that the trip mechanism is released just before the keybar is

arrested. Check also that the keybar is held down by the locking bar when the finger-pressure on the key is released. Repeat this procedure with all the printing keys.

Action

21.2 To adjust, insert a screwdriver through the hole at the rear of the keyboard main frame, slacken the trip lever securing screw, Fig.4.15, and lever the trip lever pivot up or down as required. Tighten the screw.

## 22. PUSH ROD LIFT

Check

22.1 With the keyboard in the reset position, check that the clearance between the operating faces of the transfer bellcranks, Fig.4.17, and each of the studs on the combination bars is not more than .005 in. (dimension 'v').

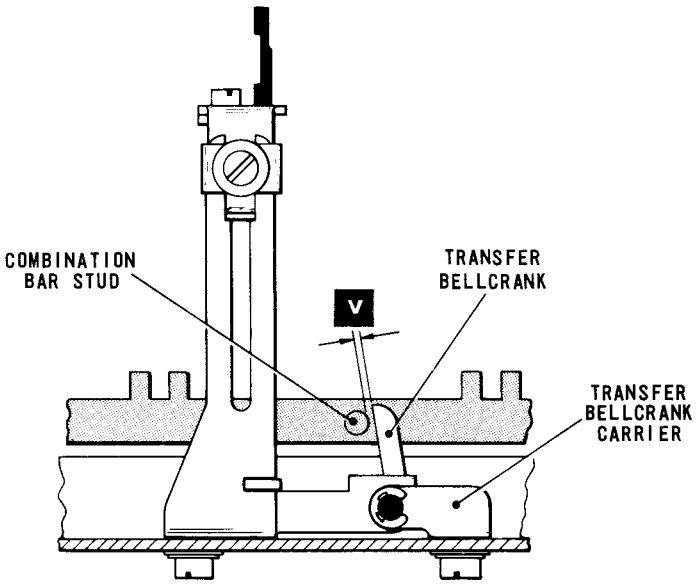


Fig. 4.17 PUSH ROD LIFT

Action

22.2 To adjust, slacken the two screws securing the transfer bellcrank carrier and reposition the carrier until the correct clearance is obtained. Tighten the carrier securing screws.

## G. TRANSMITTER UNIT

## 23. CONTACT SPRINGS

(a) Code, Start and Stop Contacts

Check

23.1 Check that the left-hand face of the contact plate, Fig.4.18, is clear of the tips of each contact stud by a maximum of .010 in. (dimension 'w') and that the tips of the studs are in alignment.

23.2 Check that there is a clearance of .020 - .025 in. (dimension 'x') between each mark contact blade and its associated tongue.

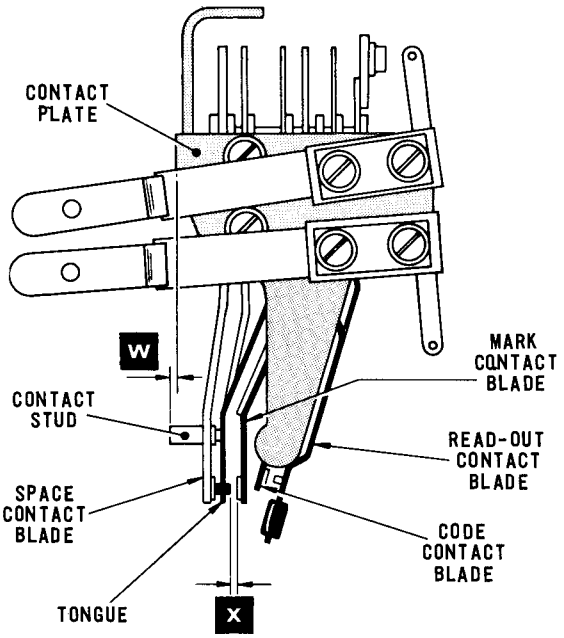


Fig. 4.18 TRANSMITTER UNIT—FRONT VIEW

23.3 Check that the following spring pressures are within the limits indicated.

(i) A force of 2 - 2½ ounces (57 - 72 grammes) applied to the tip of each tongue to move it clear of its associated space contact blade.

(ii) A force of 1 - 1½ ounces (28 - 43 grammes) applied to the tip of each mark contact blade to move it away from its associated buffer.

(iii) A force of 2½ - 3 ounces (72 - 85 grammes) applied to the tip of each code contact blade to move it away from its associated buffer.

(iv) A force of 2½ - 3½ ounces (72 - 99 grammes) applied to the tip of each read-out contact blade to cause its contact to engage the code contact blade.

Action

23.4 To adjust, set the appropriate contact blades until all the conditions are satisfied.

(b) Send-Receive Contacts

Check

23.5 Check that the following conditions are present.

(i) A force of 1 - 1½ ounces (28 - 43 grammes) applied to the tip of the receive contact blade, Fig. 4.19, causes the blade to move away from its buffer.

(ii) There is a clearance of .025 - .035 in. (dimension 'y') between the receive contact blade and the tongue.

(iii) A force of 1 - 1½ ounces (28 - 43 grammes) applied to the tip of the tongue causes the tongue to engage the receive contact blade.

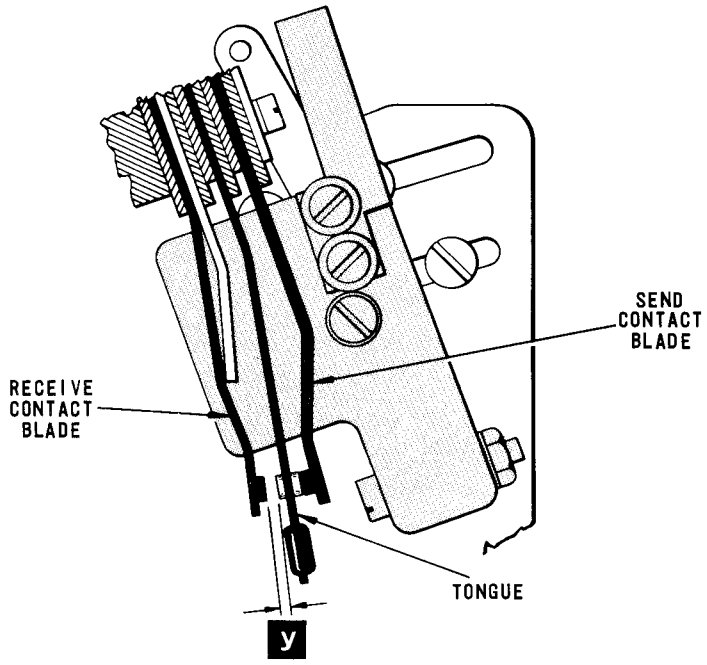


Fig. 4.19 SEND-RECEIVE CONTACTS

Action

23.6 To adjust, set the appropriate contact blades until all the conditions are satisfied.

## H. ANSWER-BACK UNIT

■ After the answer-back unit has been completely dismantled for overhaul and then reassembled, the trip linkages may be so far out of adjustment that it is unlikely that the normal method of releasing the mechanism by operating the 'Here Is' trip bellcrank, Fig.4.21, will be effective. If this is so, the ward drum shaft may be released by depressing the lag disc release pawl, Fig.4.24, by hand. Turning the ward drum ratchet counter-clockwise with the tip of a narrow screwdriver will then bring the drum into the part-cycle position required for most of the adjustments which follow.

A consequence of this direct method of releasing the ward drum and then feeding it round to the rest position after the adjustment has been completed, is that the lag disc spring will be wound up by one turn. To avoid the repetition of this procedure from overwinding the spring, it is recommended that the lag disc is released after each adjustment by fully lowering and then raising the release lever, Fig.4.20.

### 24. LATCH TRIP LEVER

(a) Vertical Clearance

Check

24.1 Release the answer-back unit and feed the ward drum round for one or two wards, as shown in Fig.4.21. Ensure that the release lever, Fig.4.20, is engaged on

the top step of the release lever latch. With these conditions set up, check that there is a vertical clearance of .003 - .008 in. (dimension 'z') between the latch trip lever and the tail of the release lever latch.

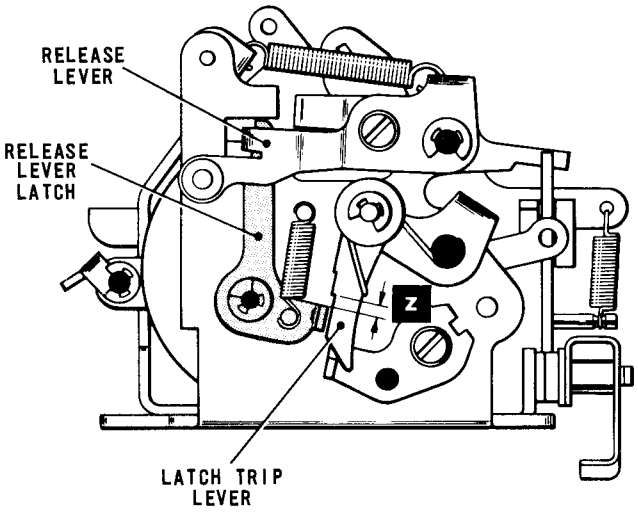


Fig. 4.20 ANSWER-BACK LATCH TRIP LEVER-VERTICAL CLEARANCE

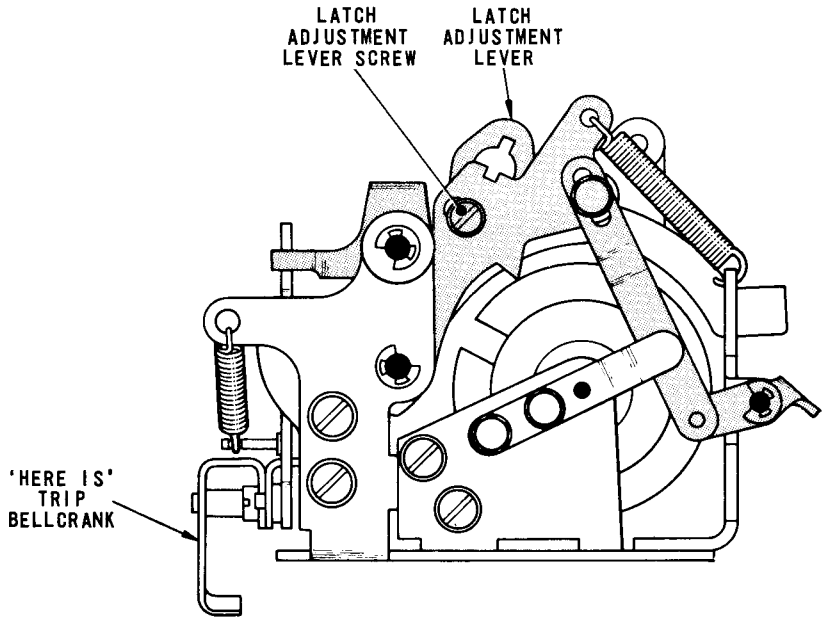


Fig. 4.21 ANSWER-BACK PART-CYCLE CONDITION

Action

24.2 To adjust, slacken the screw securing the latch adjustment lever, Fig.4.21, and raise or lower the lever by means of its screwdriver slot until dimension 'z' is obtained. Tighten the screw.

(b) Horizontal Clearance

Check

24.3 Return the unit to the rest position. Check that there is now a horizontal clearance of .002 - .006 in. (dimension 'aa') between the latch trip lever, Fig.4.23, and the tail of the release lever latch.

Action

24.4 To adjust, slacken the screw securing the trip adjustment lever and move the lever until dimension 'aa' is obtained. Tighten the screw.

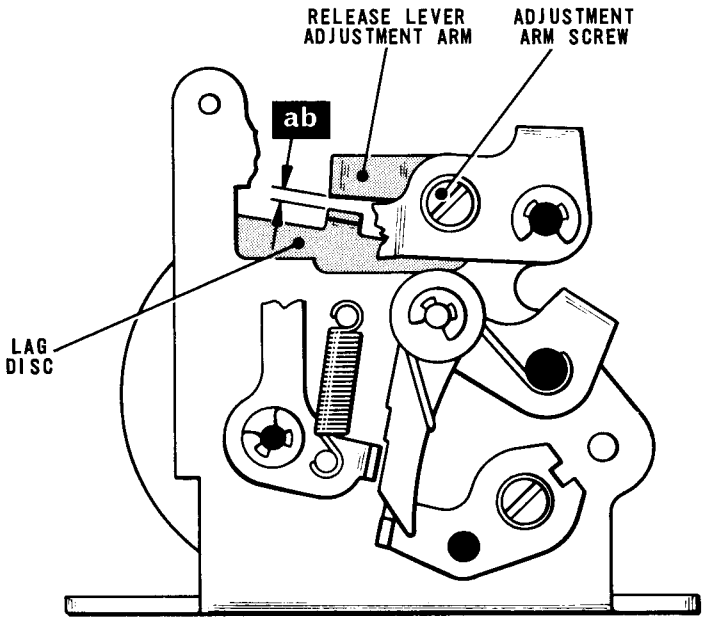


Fig. 4.22 ANSWER-BACK LAG DISC CLEARANCE

## 25. LAG DISC CLEARANCE

Check

25.1 Release the answer-back unit and feed the ward drum round for one or two wards. Ensure that the release lever, Fig.4.20, is engaged on the top step of the release lever latch. Turn the lag disc, Fig.4.22, clockwise by hand until the lug on the lag disc is directly beneath the end of the release lever adjustment arm, as shown in the figure. Check that there is now a clearance of .005 - .010 in. (dimension 'ab') between the lug on the lag disc and the adjustment arm.

Action

25.2 To adjust, slacken the screw securing the adjustment arm and move the arm until the above condition is satisfied. Tighten the screw.

## 26. RELEASE LEVER LIFT

Check

26.1 Release the answer-back unit, ensuring that the release lever, Fig.4.23, is engaged on the top step of the release lever latch. With the ward drum in the

rest position, operate the 'Here Is' trip bellcrank, Fig.4.24, and check that the release lever, Fig.4.23, is lifted an estimated .005 in. (dimension 'ac') clear of the top step of the release lever latch.

★ During this check, ensure that the release lever is not forced against the main frame at point 'X'.

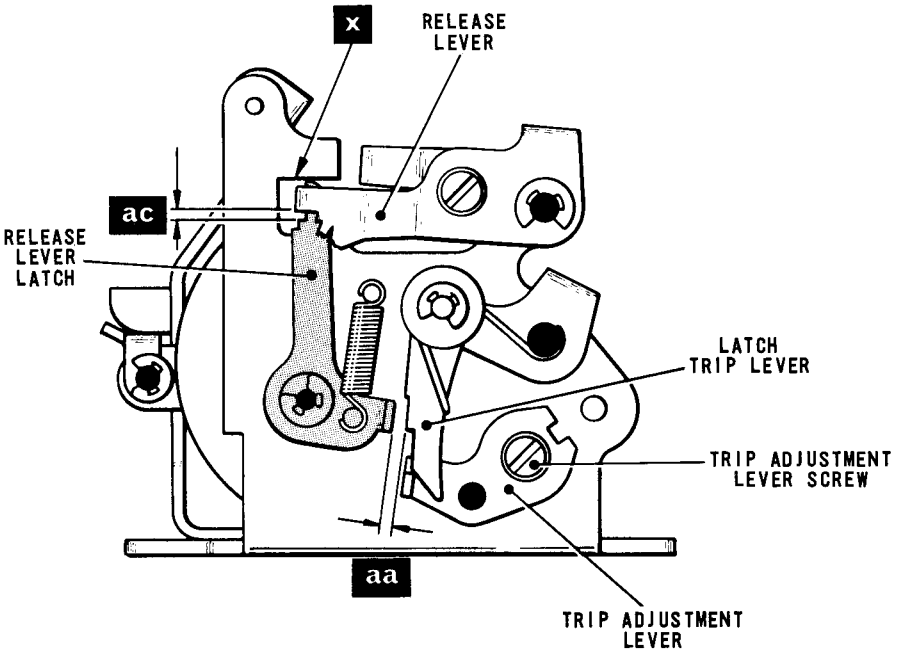


Fig. 4.23 ANSWER-BACK UNIT—REAR VIEW

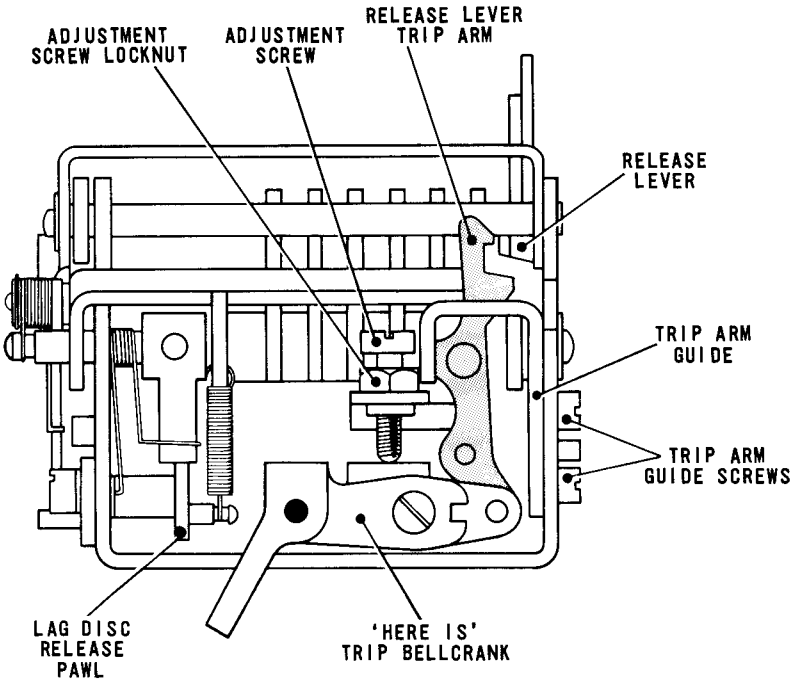


Fig. 4.24 ANSWER-BACK TRIP MECHANISM

Action

26.2 To adjust, slacken the two screws securing the trip arm guide, Fig.4.24, and lever the guide up or down until the required condition is obtained. Tighten the guide screws.

## 27. RELEASE LEVER TRIP ARM ENGAGEMENT

Check

27.1 Release the answer-back unit and feed the ward drum round for one or two wards. Ensure that the release lever, Fig.4.23, is engaged on the top step of the release lever latch. Check that the latching face of the release lever trip arm, Fig.4.24, is held clear of the tail of the release lever.

27.2 Return the ward drum to the rest position. Check that the trip arm now latches over the tail of the release lever.

Action

27.3 To adjust, slacken the adjustment screw locknut and turn the screw until the above conditions are satisfied. Secure the adjustment screw with its locknut.

# SECTION 2

## 28. TRANSLATOR CLUTCH

Check

28.1 With the translator camshaft in the rest position and the retention lever roller located in its recess in the retention cam, lift the translator clutch abutment so that the clutch trigger, Fig.4.25, is released. Turn the machine by hand until the clearance between the trigger and its backstop can be measured easily and check that this clearance is now .093 - .110 in. (dimension 'ad').

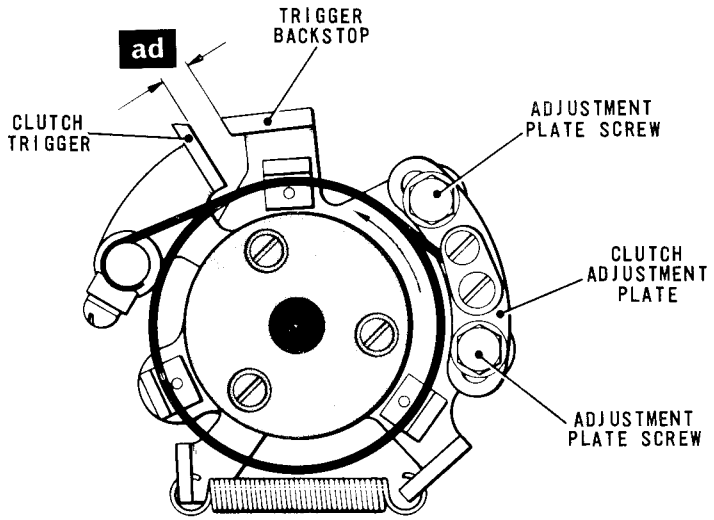


Fig. 4.25 TRANSLATOR CLUTCH—REAR VIEW

Action

28.2 To adjust, turn the machine by hand until the clutch adjustment plate is accessible, slacken the two screws securing the adjustment plate and move the plate until dimension 'ad' is achieved. Tighten the screws.

## †29. PIN-BOX TRAVERSE MULTIPLYING LEVER

Check

29.1 Clamp the pivot of the traverse multiplying lever, Fig.4.26, in the mid-position of its movement.

29.2 Set the machine up so that it is at rest with the translator unit pin-box in its forward position, i.e. nearest the front of the machine. Lift the translator clutch abutment and turn the machine by hand until the function bars have just moved towards the rear of the machine.

29.3 Lightly pull the traverse multiplying lever outwards so that any backlash in the mechanism is taken up. Check that there is now a clearance (dimension 'ae' - inset) between the front end of the slot in the lever and the shouldered pin.

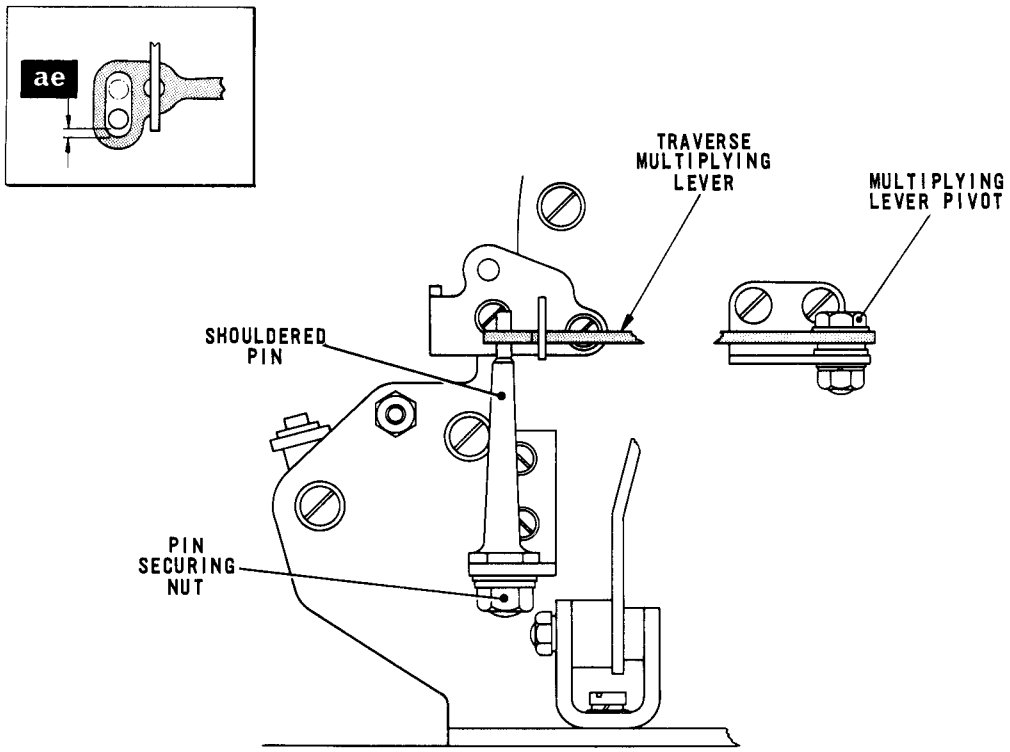


Fig. 4.26 PIN-BOX TRAVERSE ACTION

29.4 Return the machine to the rest position. Lift the translator clutch abutment and turn the machine by hand until the function bars have again just moved towards the rear of the machine.

29.5 Lightly push the traverse multiplying lever inwards so that any backlash in the mechanism is taken up. Check that a clearance equal to dimension 'ae' now exists between the rear end of the slot in the lever and the shouldered pin.

Action

29.6 To adjust, remove the operation counter, slacken the nut securing the shouldered pin and reposition the pin until both the above conditions are satisfied. Tighten the pin securing nut and refit the operation counter.

## 30. PECKER RETENTION ARM

(a) Horizontal Position

Check

30.1 Move the electromagnet armature to the space position so that the selector clutch detent, Fig.4.28, is released. Turn the machine by hand until the striker lever, Fig.4.27, is on one of the high points of the striker cam. Check that there is now a horizontal clearance of .005 - .010 in. (dimension 'af') between the hook on the retention arm and the engagement face of the striker lever.

Action

30.2 If this is not so, slacken the two screws securing the retention arm bracket until it is friction tight. Using the screwdriver slot in the top of the bracket, lever the retention arm sideways until the correct clearance is present. Tighten the bracket screws.

(b) Vertical Position

Check

30.3 Move the electromagnet armature to the mark position and continue to turn the machine by hand until the striker lever locates in one of the recesses in the striker cam. Check that this movement causes the lever to pass over the retention arm with an estimated vertical clearance of .010 - .020 in. (dimension 'ag' - inset).

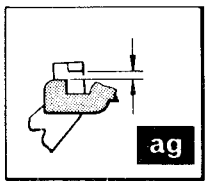


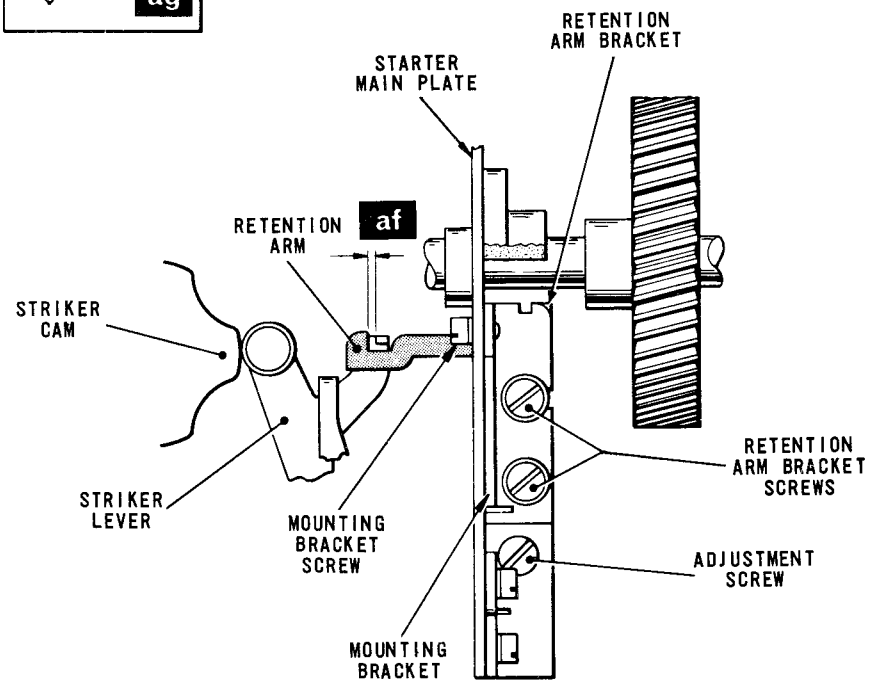


Fig. 4.27 PECKER RETENTION ARM MECHANISM—REAR VIEW

Action

30.4 To adjust, ensure that the electromagnet armature is still in the mark position, slacken the mounting bracket screw and turn the adjustment screw until the correct vertical clearance is obtained. Tighten the mounting bracket screw.

## 31. SELECTOR DETENT CLEARANCE

Check

31.1 With the machine in the rest position and the selector clutch trigger, Fig.4.28, held against the clutch detent, move the electromagnet armature to the space position so that the detent is released. Maintaining light pressure on the detent to take up any backlash present, check that there is now a vertical clearance of .005 - .010 in. (dimension 'ah' - inset) between the clutch trigger and the detent.

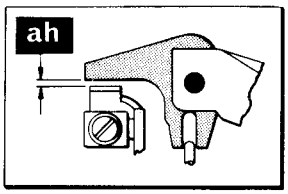


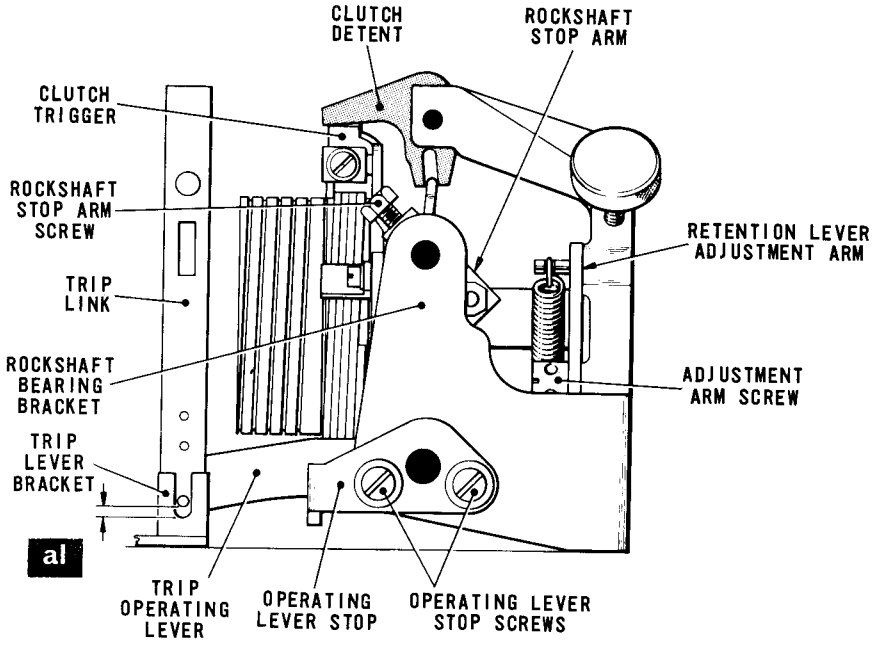


Fig. 4.28 SELECTOR CLUTCH TRIGGER MECHANISM—SIDE VIEW

Action

31.2 To adjust, slacken the rockshaft special screw, Fig.4.29, and, ensuring that the electromagnet armature remains at space, reposition the detent until dimension 'ah' is satisfied. Tighten the rockshaft screw.

## 32. SELECTOR CAMSHAFT RETENTION LEVER

Check

32.1 With the electromagnet armature in the mark position, the retention lever roller located in its recess in the retention cam and the clutch trigger, Fig.4.29, held against the clutch detent, check that there is a clearance of .010 – .015 in. (dimension 'aj' – inset) between the trigger and its backstop.

Action

32.2 If this is not so, slacken the capstan-headed screw securing the retention lever adjustment arm, Fig.4.28, and push the arm inwards so that the cam assembly moves clockwise and the trigger backstop, Fig.4.29, presses the trigger against the detent. Now gently move the cam assembly counter-clockwise until dimension 'aj' is set up and then tighten the adjustment arm screw, Fig.4.28.

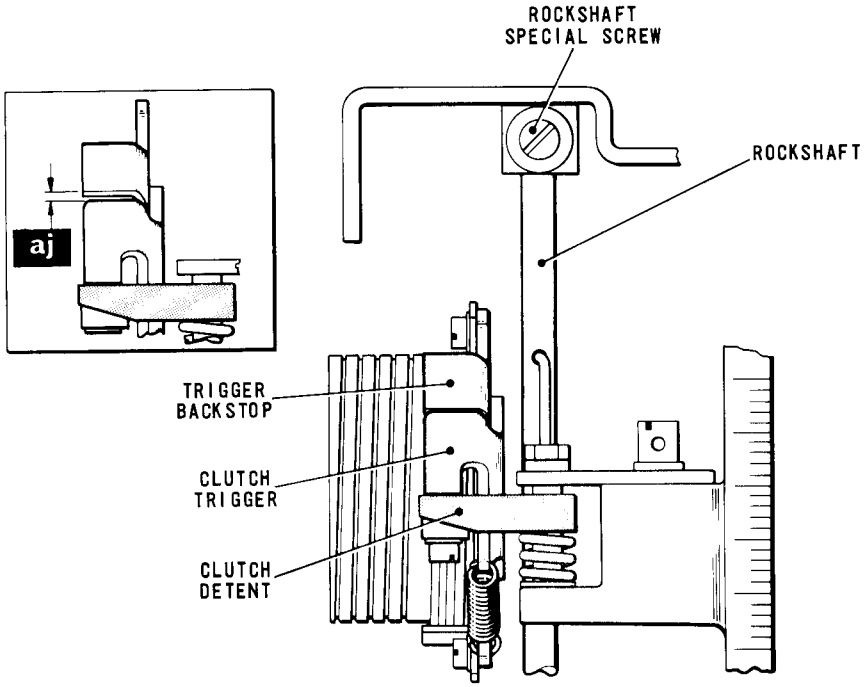


Fig. 4.29 SELECTOR CLUTCH TRIGGER MECHANISM—PLAN VIEW

## 33. SELECTOR CLUTCH

Check

33.1 Move the electromagnet armature to the space position so that the clutch detent is lifted and the clutch trigger, Fig.4.30, is released. Check that there is now a clearance of .093 – .110 in. (dimension 'ak') between the clutch trigger and its backstop.

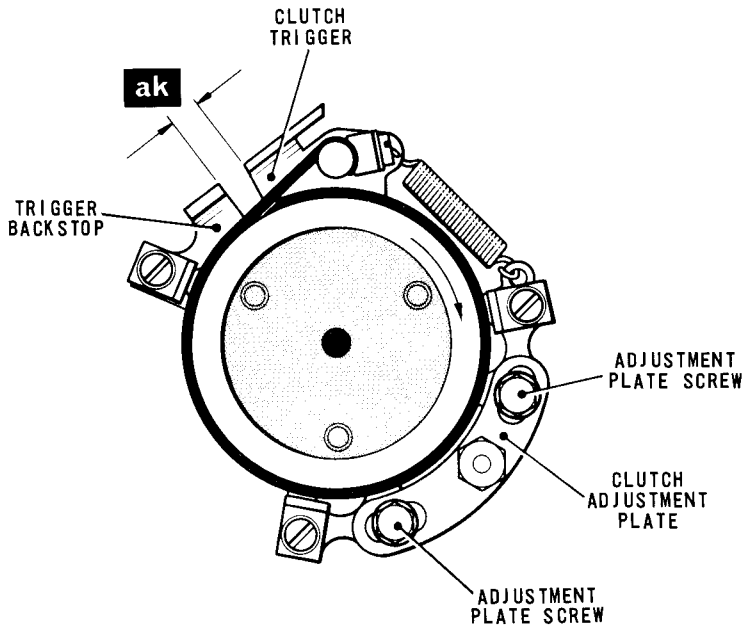


Fig. 4.30 SELECTOR CLUTCH

Action

33.2 To adjust, turn the machine by hand until the clutch adjustment plate is accessible, slacken the two screws securing the adjustment plate and move the plate until dimension 'ak' is achieved. Tighten the adjustment plate screws.

## 34. SELECTOR ROCKSHAFT END-PLAY

Check

34.1 Check that there is a maximum of .003 in. end-play in the rockshaft, Fig.4.29, and, with the electromagnet armature in the mark position, check that the pin on the rockshaft stop arm, Fig.4.28, is touching the edge of the rockshaft bearing bracket.

Action

34.2 To adjust, slacken the screw securing the rockshaft stop arm until it is friction tight and position the stop arm so that the correct end-play is present. Then, ensuring that the electromagnet armature remains at mark and that the end-play which has just been set is not disturbed, turn the stop arm about the rockshaft until the pin just touches the rockshaft bearing bracket. Tighten the stop arm screw.

## 35. TRANSLATOR TRIP OPERATING LEVER STOP

Check

35.1 With the machine at rest, check that the trip operating lever, Fig.4.28, is against its stop and that there is a clearance of .003 - .010 in. (dimension 'al') between the pin on the trip link and the bottom of the slot in the trip lever bracket.

Action

35.2 To adjust, slacken the two screws securing the trip operating lever stop until friction tight and lever up the stop as far as it will go. Pull the trip link forward against its guides and press down so that the pin on the link is at the bottom of the slot in the bracket. Maintaining this condition, measure the clearance between the operating lever stop and the surface of the translator unit base plate with a feeler gauge.

35.3 Add a further .003 in. to the operating lever stop/base plate clearance determined above and re-insert the gauge between the stop and the base plate. With this increased dimension set up, tighten the stop screws. Repeat Check 35.1 which should now be satisfied.

## 36. TRANSLATOR CLUTCH TRIP

Check

36.1 Lift the trip operating lever, Fig.4.28, so that the trip link passes over the abutment frame trip lever, Fig.4.3. Holding the operating lever, Fig.4.28, in this position, insert a .015 in. feeler gauge between the operating lever and the hook of the operating lever stop. Release the lever so that it moves down on to the gauge and check that the translator clutch abutment does not trip.

36.2 Replace the .015 in. feeler gauge with a .005 in. gauge and repeat Check 36.1. Check that the translator clutch abutment will now trip.

Action

36.3 To adjust, maintain the condition set up in Check 36.2 and slacken the capstan-headed screw securing the adjustment plate, Fig.4.3. Holding the slide block in contact with the abutment frame trip lever, move the adjustment plate until the clutch abutment trips the clutch trigger. Tighten the adjustment plate screw.

## 37. STARTER TRIP FROM ELECTROMAGNET

Check

37.1 Disengage the starter arm pin, Fig.4.32, from the worm wheel. Depress the starter arm as far as it will go so that the starter lever, Fig.4.31, moves fully down. Holding the arm in this position, and with the electromagnet armature against the marking stop, check that there is a maximum clearance of .006 in. (dimension 'am') between the rockshaft peg and the starter operating link.

37.2 Move the electromagnet armature to space and check that this action causes the peg to displace the link.

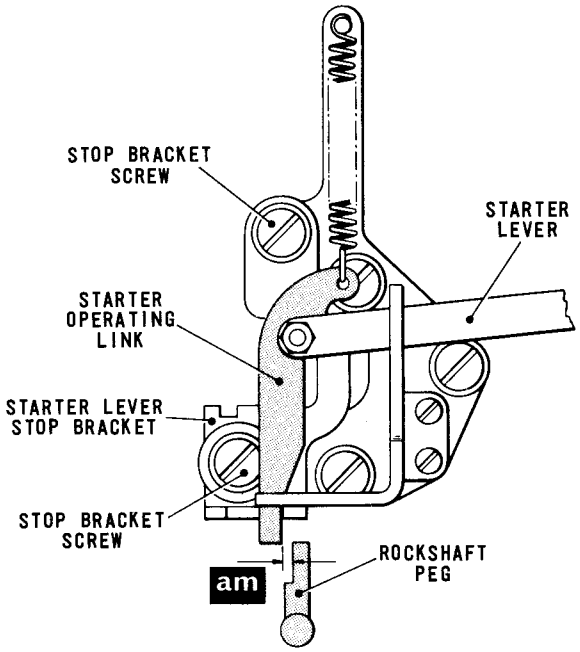


Fig. 4.31 STARTER TRIP FROM ELECTROMAGNET

Action

37.3 To adjust, slacken the two screws securing the starter lever stop bracket and, with the electromagnet armature in the mark position, move the stop bracket by means of its screwdriver slot until both conditions are satisfied. Tighten the bracket screws.

## 38. STARTER TRIP FROM TRANSLATOR CLUTCH

Check

38.1 Trip the translator clutch by raising and then lowering the trip operating lever, Fig.4.28. Holding the trip operating lever fully down,

check that there is now a clearance of .005 - .010 in. (dimension 'an') between the starter arm pin, Fig.4.32, and the worm wheel.

Action

38.2 To adjust, slacken the screw clamping the forked lever and turn the trip shaft until the correct clearance is obtained. Tighten the clamp screw.

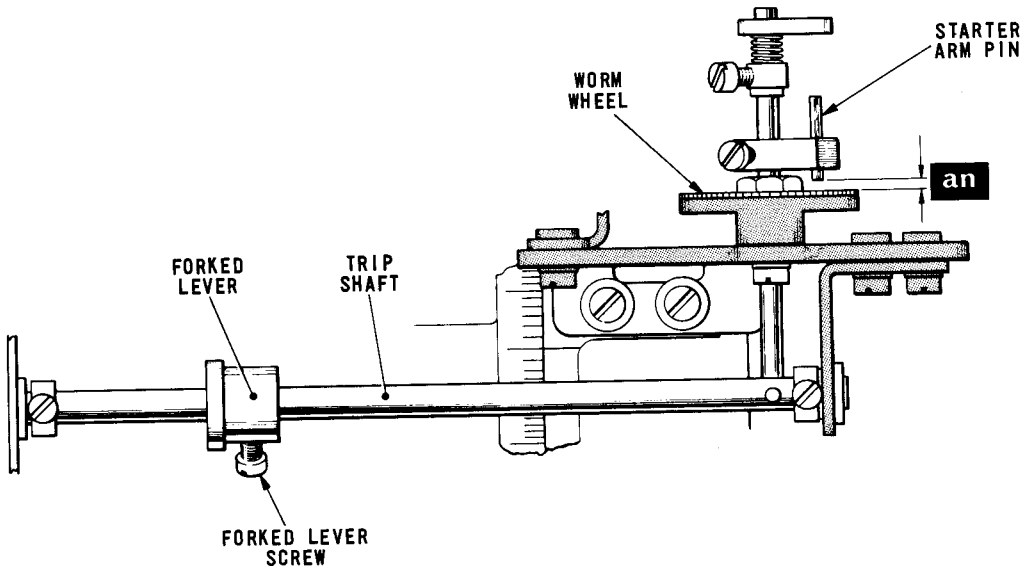


Fig. 4.32 STARTER TRIP SHAFT LINKAGE

## †39. PECKER/CODE SELECTION PIN CLEARANCE

Check

39.1 Move the electromagnet armature to the mark position and check that the selector shaft is held at rest. Lift the translator clutch abutment and turn the machine through two complete cycles. Check that all the selection pins in the pin-box have been withdrawn.

39.2 Move the electromagnet armature to space. Turn the machine by hand until the pecker, Fig.4.33, is opposite the first (inner) selection pin and the striker lever, Fig.4.27, is held away from the striker cam by the retention arm hook.

39.3 Lightly press the pecker, Fig.4.33, towards the selection pin to take up any play that may be present and check that there is a clearance of .030 - .045 in. (dimension 'ap') between the pecker and the pin.

39.4 Repeat this procedure with the pecker opposite the fifth (outer) selection pin.

Action

39.5 If adjustment is necessary, remove the keyboard and stand the machine on its back. Disconnect the pecker frame return spring and slacken the nuts securing the pecker frame until friction tight. Ensure that the striker lever, Fig.4.27, is held by the retention arm hook and reposition the pecker frame, Fig.4.33, on its shaft until the correct clearance is present at both ends of the pecker traverse. Tighten the frame securing nuts, re-connect the pecker frame return spring and refit the keyboard.

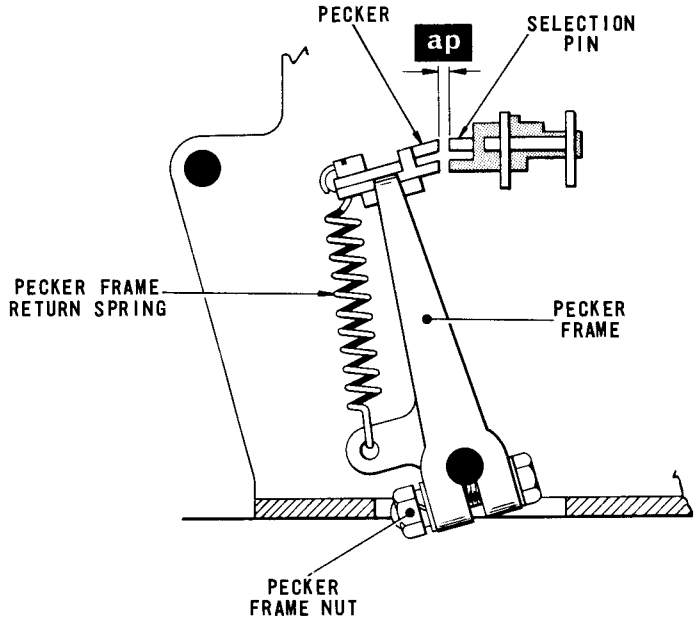


Fig. 4.33 PECKER/SELECTION PIN CLEARANCE

## †40. PECKER TRAVERSE

Check

40.1 Lift the selector clutch detent and then move the electromagnet armature to the mark position. Turn the machine slowly by hand and check that each selection pin, Fig.4.33, is struck by the pecker and that the area of contact between the pecker and the pins is as great as possible over the complete traverse. Repeat this check with the pin-box in its alternative position.

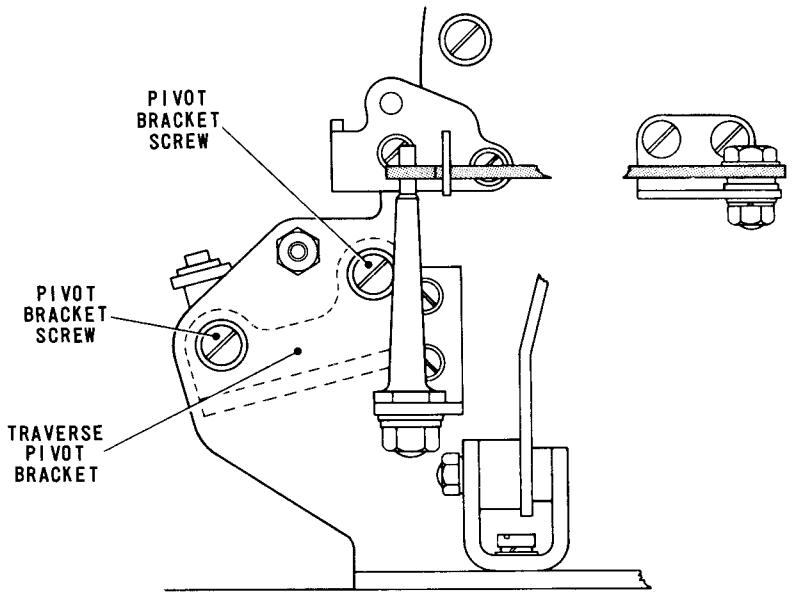


Fig. 4.34 PECKER/SELECTION PIN ENGAGEMENT

Action

40.2 To adjust, remove the operation counter, slacken the screws securing the traverse pivot bracket, Fig.4.34, and reposition the bracket until the above conditions are satisfied for both sets of pins. Tighten the bracket screws and refit the operation counter.

## 41. CARRIAGE RETURN PAWL LIFT

Check

41.1 Operate the carriage return manual lever to move the typehead carriage to its extreme left-hand position. Set up the carriage return code combination (SSSMS) on the pins, lift the translator clutch abutment and turn the machine by hand until the noses of the feed and retention pawls, Fig.4.35, are at their highest point. Check that the pawls are now high enough to enable the pawl latch to pass beneath their noses with a clearance of approximately .030 in. (dimension 'aq'). Check also that there is a clearance of approximately .030 in. (dimension 'ar') between the tails of the pawls and the top of the rack teeth.

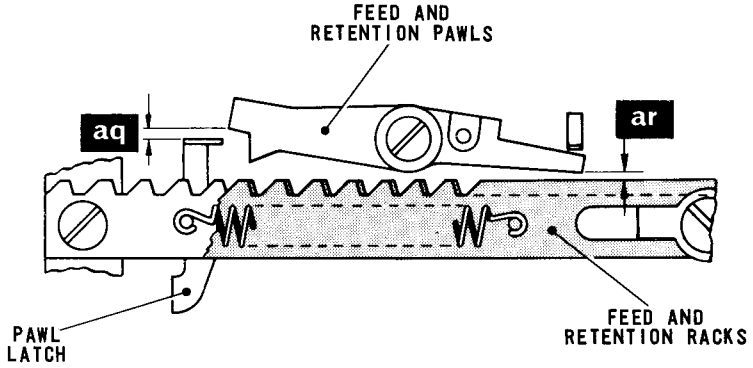


Fig. 4.35 FEED AND RETENTION RACK CLEARANCES

Action

41.2 To adjust, stand the machine on its back, slacken the screw clamping the carriage return operating arm, Fig.4.8, and reposition the arm until both the above clearances are obtained. Tighten the clamp screw.

## 42. LINE FEED LEVER STOP PLATE

Check

42.1 Move the feed change lever, Fig.4.37, to the double feed position, i.e. towards the front of the machine.

42.2 With the machine in the rest condition, turn the platen by hand and check that there is a radial clearance of .005 – .050 in. (dimension 'as') between the line feed pawl and its ratchet wheel.

42.3 Move the line feed latch, Fig.4.36, into the path of the line feed operating lever and pull the line feed roller outwards so that the lever is arrested by the latch hook, as shown in the figure. With this condition set up, check that there is a minimum clearance of .008 in. (dimension 'at') between the roller and the line feed cam.

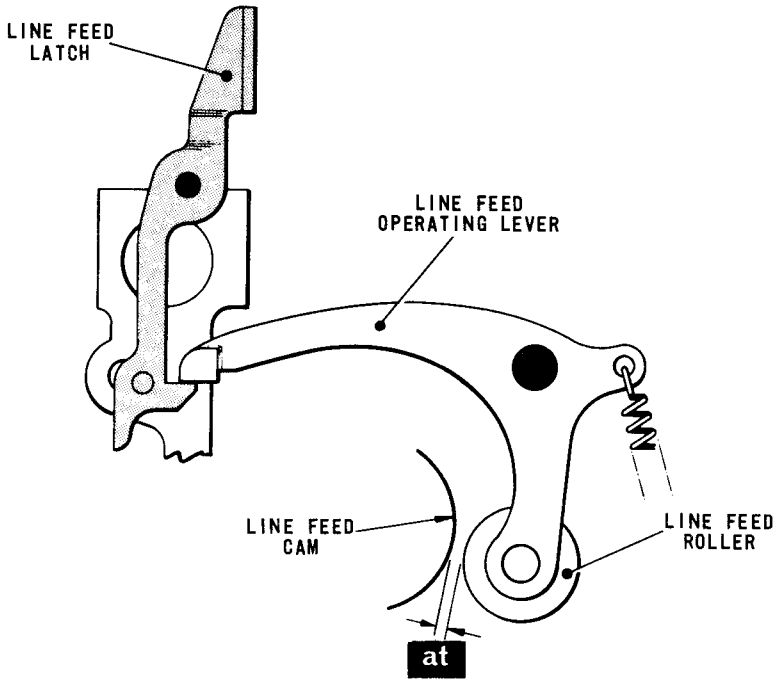


Fig. 4.36 LINE FEED OPERATING LEVER

42.4 Move the feed change lever, Fig.4.37, to the single feed position and repeat Checks 42.2 and 42.3.

Action

42.5 To adjust, slacken the screws securing the line feed lever stop plate and reposition the plate until all the above conditions are obtained. Tighten the stop plate screws.

## 43. FRICTION FEED PLATEN

Check

43.1 Move the feed change lever, Fig.4.37, to the double feed position. Depress the Line Feed Key or, if the machine has no keyboard, set up the Line Feed code combination (SMSSS) on the pins. Lift the translator clutch abutment and turn the machine by hand until the line feed mechanism is fully fed. Check that the feed pawl is now clear of its eccentric stop. Check also that there is a maximum clearance of .015 in. (dimension 'au' - inset) between the feed pawl and the next tooth of the ratchet wheel.

Action

43.2 To adjust, slacken the nut securing the retention lever, Fig.4.38, and turn the eccentric pivot by means of its screwdriver slot until dimension 'au' is satisfied. Tighten the nut.

★ If the movement available on the pivot is insufficient to satisfy Check 43.1, slacken the two ratchet wheel clamp screws, move the ratchet wheel slightly with respect to the platen and tighten the clamp screws. Access to the clamp screws is via the hole in the ratchet support plate, Fig.4.41.

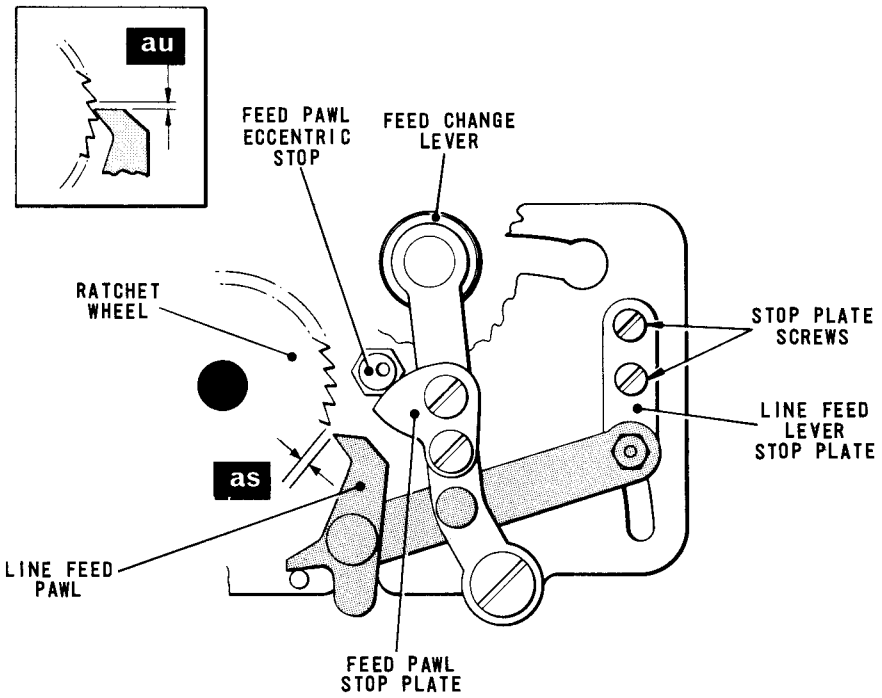


Fig. 4.37 LINE FEED RATCHET WHEEL MECHANISM

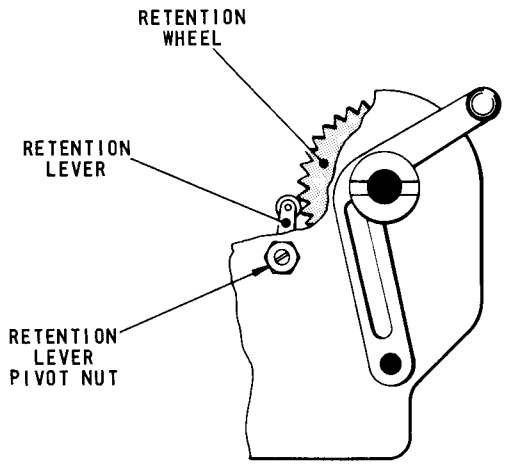


Fig. 4.38 FRICTION FEED PLATEN—LEFT-HAND END

## 44. SPROCKET FEED PLATEN

Check

44.1 Operate the sprocket feed change lever so that the feed pins protrude, and insert a sheet (or sheets) of stationery into the machine. Ensure that the pins are correctly located in the holes in the paper and check that the printing point is correctly positioned with respect to any 'boxes' on the stationery.

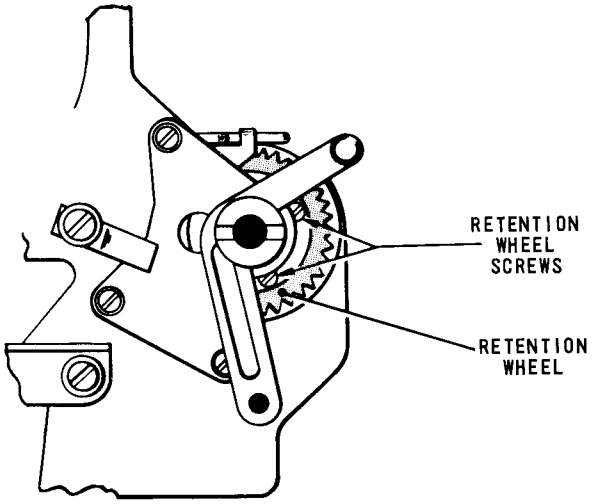


Fig. 4.39 SPROCKET FEED PLATEN—LEFT-HAND END

Action

44.2 If it is not, slacken the three screws securing the retention wheel, Fig.4.39, until they are friction tight and, holding the platen so that the correct paper/type alignment is present, move the retention wheel until its roller is fully engaged. Tighten the three retention wheel screws.

Check

44/3 Depress the Line Feed key or, if the machine has no keyboard, set up the Line Feed code combination (SMSSS) on the pins. Lift the translator clutch abutment and turn the machine by hand until the line feed mechanism is fully fed. Ensure that the retention lever roller is fully engaged in the retention wheel. Check that the feed pawl, Fig.4.37, is now clear of its eccentric stop and that there is a maximum clearance of .015 in. (dimension 'au' - inset) between the feed pawl and the next tooth of the ratchet wheel.

Action

44.4 To adjust, remove the three ratchet wheel clamp screws, turn the wheel so that the next set of holes coincide with those of the clamp screws and tighten the screws. Access to the clamp screws is via the hole in the ratchet support plate.

44.5 Repeat Check 44.3 and, if necessary, Adjustment 44.4 until the correct platen/ratchet relationship is achieved.

Check

44.6 With the right-hand paper guide retainer arm, Fig.4.40, located in the groove in its pivot bracket guide, check that the slot in the retainer arm is positioned symmetrically about the right-hand sprocket pins. Repeat this check with the left-hand guide retainer arm.

Action

44.7 To adjust, slacken the screw securing the pivot bracket guide and move the guide along its eccentric pin until the condition is satisfied. Tighten the guide screw.

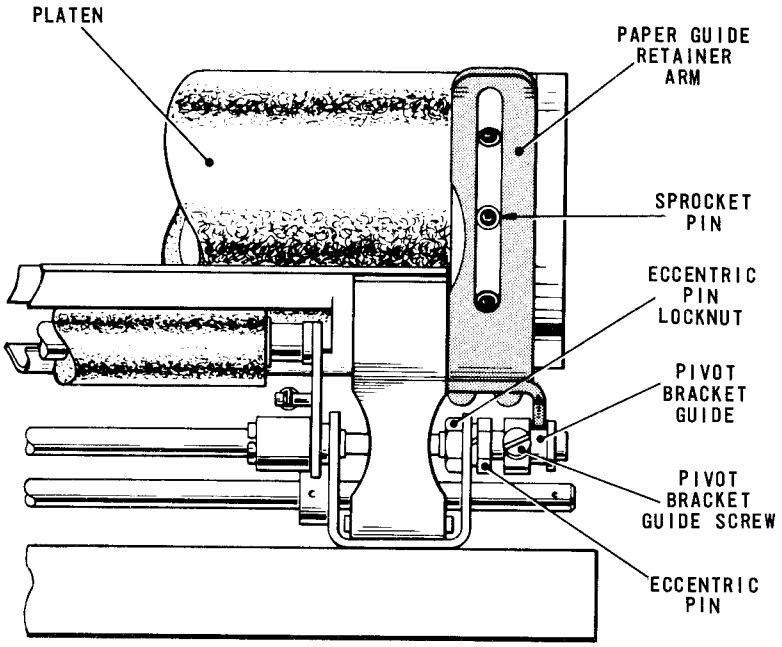


Fig. 4.40 PAPER GUIDE RETAINER

## 45. PAPER GUIDE RETAINERS

Check

45.1 Turn the platen by hand and check that the clearance between the paper guide retainer arms, Fig.4.40, and the platen is sufficient to allow the required thickness of paper to pass smoothly.

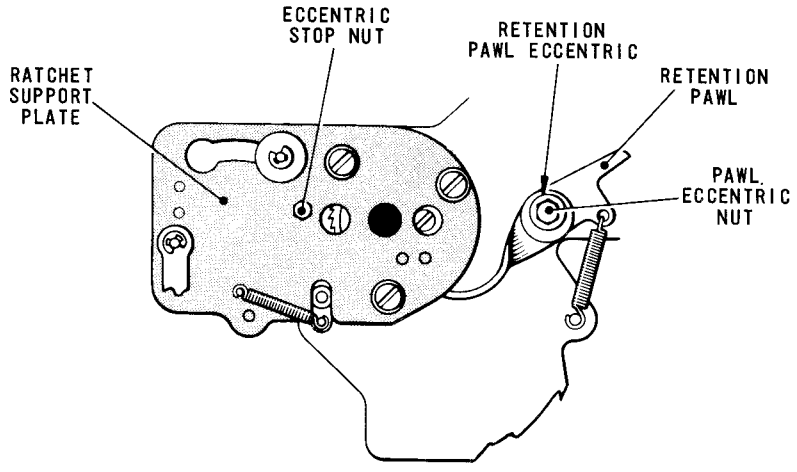


Fig. 4.41 RATCHET SUPPORT PLATE

Action

45.2 To adjust, slacken the locknut securing the eccentric pin and rotate the pin until the condition is satisfied. Tighten the locknut.

## 46. LINE FEED PAWL OVERTHROW STOPS

Check

46.1 Move the feed change lever, Fig.4.37, to the double feed position. Depress the Line Feed key or, if the machine has no keyboard, set up the Line Feed code combination (SMSSS) on the pins. Lift the translator clutch abutment and turn the machine by hand until the line feed mechanism is fully fed.

46.2 Without applying excessive force, attempt to turn the platen by hand in the normal direction of rotation. Check that some movement is possible but that it does not exceed .015 in. measured at the edge of the platen.

Action

46.3 If this is not so, slacken the eccentric stop securing nut, Fig.4.41, and turn the eccentric stop, Fig.4.37, until the correct amount of overthrow is present. Tighten the nut.

Check

46.4 Move the feed change lever to the single feed position and check that the same amount of overthrow is present as with the double feed setting.

Action

46.5 To adjust, slacken the screws clamping the feed pawl stop plate and reposition the plate until the overthrow is correct. Tighten the plate screws.

## 47. PLATEN RETENTION PAWL

Check

47.1 With the machine in the rest position, check that the retention pawl, Fig.4.41, is engaged in the ratchet wheel and that it is possible to turn the platen against the normal direction of rotation by a maximum of .015 in. measured at the edge of the platen.

Action

47.2 To adjust, slacken the nut securing the retention pawl eccentric and turn the eccentric until the correct engagement is achieved. Tighten the nut.

## 48. TYPEHEAD CARRIAGE END-PLAY

Check

48.1 Check that there is not more than .005 in. end-play on the typehead carriage.

Action

48.2 If the end-play is excessive, remove the two screws securing the typehead carriage left-hand bearing block, Fig.4.42. Hold the carriage so that the gears and racks remain in mesh and lift off the bearing block. Add .005 in. shims (Creed Part No.2003/277) as necessary between the bearing block and the carriage until the end-play is less than .005 in. Refit the bearing block and tighten its securing screws.

★ The bearing block must **always** be clamped in its extreme left-hand position.

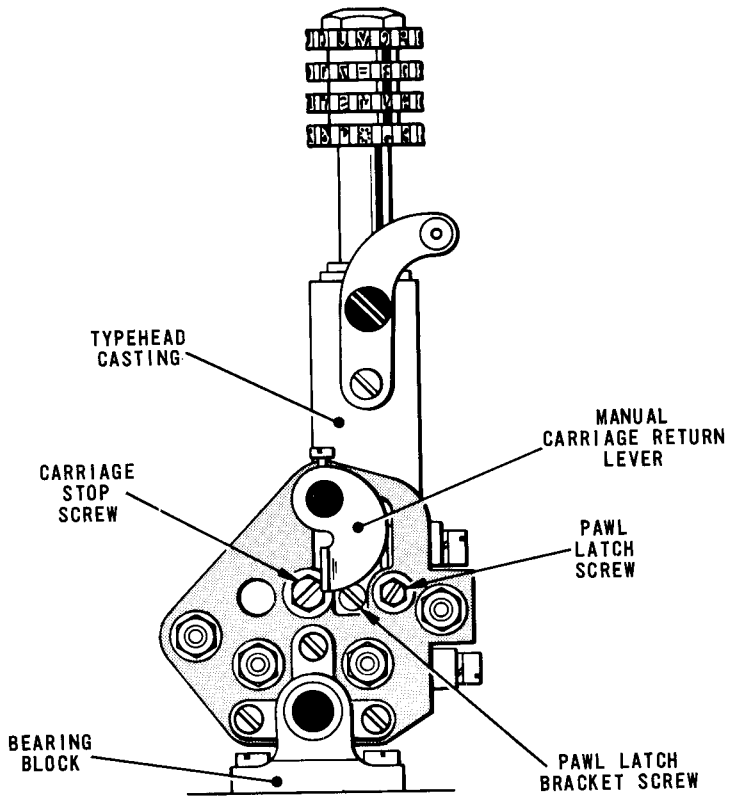


Fig. 4.42 TYPEHEAD CARRIAGE—LEFT-HAND END

## 49. TYPEHEAD CARRIAGE STOP SCREW AND PAWL LATCH

Check

49.1 Operate the carriage return manual lever, Fig.4.42, so that the typehead moves to its extreme left-hand position. Check that the retention pawl, Fig.4.43, is now resting in the correct tooth of the retention rack for the required left-hand margin, i.e.

| Retention Rack Tooth | Nominal Left-hand Margin |
|---|---|
| 6th | 0.5 in. |
| 7th | 0.6 in. |
| 8th | 0.7 in. |
| 9th | 0.8 in. |

49.2 Check that the retention pawl is clear of the next tooth of the retention rack by approximately .005 in. (dimension 'av') and that the pawl latch clears the feed and retention pawls by approximately .015 in. (dimension 'aw').

Action

49.3 If these conditions are not satisfied, adjust as follows.

(a) Slacken the locknut of the pawl latch screw, Fig.4.42, and turn the screw until its end is well clear of the pawl latch, Fig.4.43.

(b) Slacken the locknut of the carriage stop screw, Fig.4.42, and turn the screw until the retention pawl, Fig.4.43, engages the correct tooth of the retention rack and until dimension 'av' is set up. Clamp the carriage stop screw, Fig.4.42, in this position with its locknut.

(c) Turn the pawl latch screw until dimension 'aw' is obtained and clamp the screw in this position with its locknut.

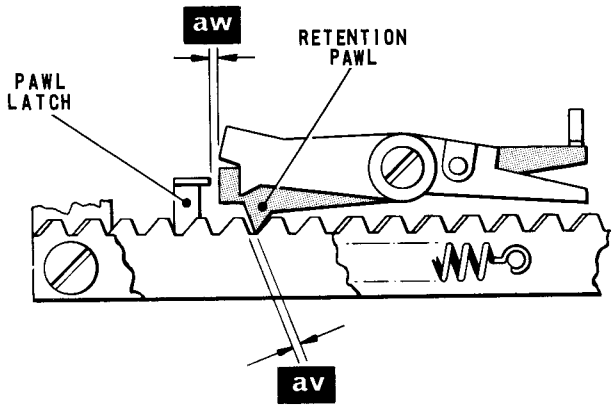


Fig. 4.43 TYPEHEAD RETENTION PAWL

## 50. FEED AND RETENTION PAWL HEIGHT

Check

50.1 Slide the typehead to the right-hand limit of its travel. Holding the typehead in this position, operate the carriage return manual lever, Fig.4.42, so that the feed and retention pawls, Fig.4.44, are held up by the pawl latch. Allow the typehead to slide slowly to the left and check that the tails of both pawls clear the racks by .030 - .045 in.

Action

50.2 If this is not so, slacken the two screws (one only shown in Fig.4.42) clamping the pawl latch bracket to the typehead casting, and reposition the bracket until the correct pawl clearance is present. Tighten the bracket clamp screws.

## 51. TYPEHEAD CARRIAGE FEED LINK

Check

51.1 Operate the carriage return manual lever, Fig.4.42, so that the typehead moves to its extreme left-hand position. Depress any printing key or, if the machine has no keyboard, set up any printing combination on the pins. Lift the translator clutch abutment and turn the machine by hand until the carriage feed link, Fig.4.44, has moved to its extreme right-hand position.

51.2 Move the pawl latch away from the pawls. Check that the retention pawl has dropped into engagement with the retention rack and is clear of the next tooth face by an estimated .004 - .008 in. (dimension 'ax').

★ The feed pawl is shown lifted in the figure to clarify the required retention pawl condition.

Action

51.3 To adjust, carry out the following procedure.

(a) Set up the machine as in Check 51.1, i.e. with the letter feed mechanism fully fed.

(b) Unscrew the carriage feed link nut and its locknut so that the feed rack is allowed to move to its extreme left-hand position under the action of its spring.

(c) Slowly tighten the carriage feed link nut until the retention pawl just drops into the retention rack, then turn a further quarter of a turn to achieve dimension 'ax'. Clamp the nut in this position with its locknut.

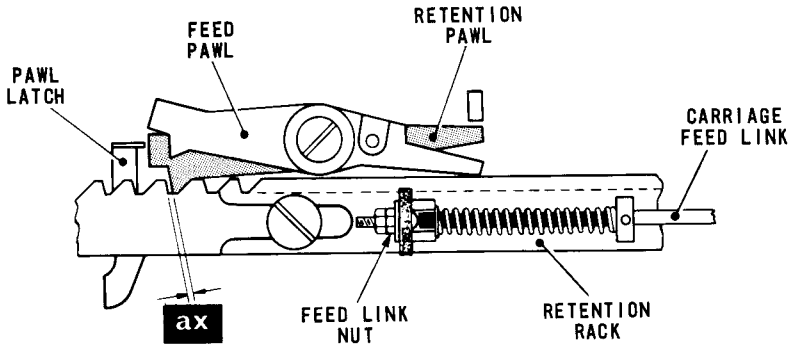


Fig. 4.44 TYPEHEAD CARRIAGE FEED LINK

## 52. CARRIAGE RETURN SPRING

Check

52.1 Slide the typehead to its extreme right-hand position. Apply a tension gauge to the spring drum tape stud, Fig.4.45, and check that there is a force of 4½ - 5 lb (2.04 - 2.27 kg) acting at the periphery of the drum.

Action

52.2 If this is not so, insert a tommy pin into one of the holes in the capstan-headed pivot boss and slacken the pivot nut. Turn the pivot boss approximately a quarter of a turn at a time, clockwise to decrease or counter-clockwise to increase the tension, and tighten the pivot nut. Repeat this procedure as often as necessary until the correct tension is achieved.

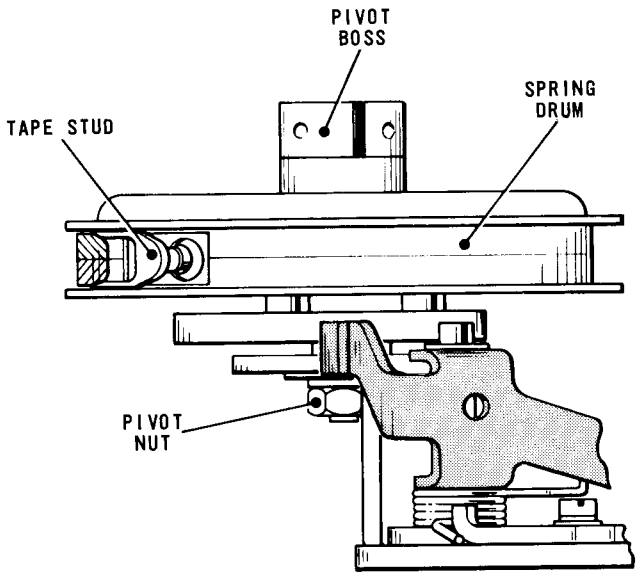


Fig. 4.45 CARRIAGE RETURN SPRING DRUM

## 53. DASHPOT

Check

53.1 Operate the carriage return manual lever, Fig.4.42, so that the typehead moves to its extreme left-hand position. Stand the machine on its back and check that it is now possible to move the dashpot piston, Fig.4.46, a further .060 in. into its cylinder.

Action

53.2 If this is not so, slacken the three dashpot securing screws. Move the dashpot unit until the above condition is satisfied and tighten the securing screws.

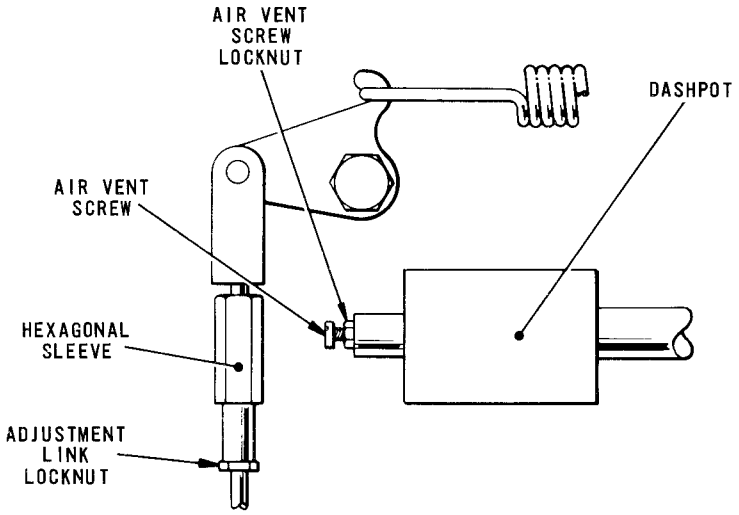


Fig. 4.46 DASHPOT/PRINT SPRING MECHANISM

Check

53.3 Slide the typehead to its extreme right-hand position. Operate the carriage return manual lever and check that the typehead returns to the left-hand position with a minimum of impact.

Action

53.4 To adjust, carry out the following procedure.

(a) Slacken the locknut of the dashpot air vent screw and turn the screw clockwise until the air vent is fully closed. This will cause pneumatic bounce to occur when the typehead is returned to its left-hand position.

(b) Turn the air vent screw counter-clockwise a quarter of a turn at a time and repeat Check 53.3. Repeat this procedure as often as necessary until the typehead bounce **just** ceases, and lock the air vent screw in this position with the locknut.

## 54. PRINT SPRING

Check

54.1 Ensure that the top end of the print spring change lever is towards the rear of the machine. Stand the machine on its back and check that a force of approximately 3 lb (1.36 kg), applied to the print beam, Fig.4.47, at and in the direction of the arrow, just moves the beam.

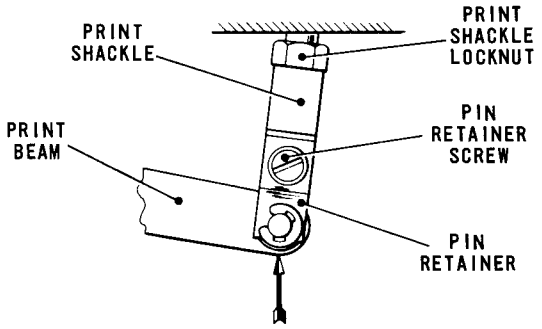


Fig. 4.47 PRINT BEAM/PRINT SHACKLE LINKAGE

Action

54.2 To adjust, slacken the locknut of the spring adjustment link, Fig.4.46, and turn the hexagonal sleeve until the correct tension is present. Tighten the locknut.

## 55. TYPEHEAD/PLATEN CLEARANCE

Check

55.1 Depress the letter 'X' key or, if the machine has no keyboard, set up the letter 'X' combination (MSMMM) on the pins. Lift the translator clutch abutment and turn the machine by hand until the print lever, Fig.4.7, is on the highest point of its cam (just prior to fall off). Using slip gauge TA1338, check that there is a clearance of approximately 0.5 in. (dimension 'ay' ) between the typehead, Fig.4.48, and the platen.

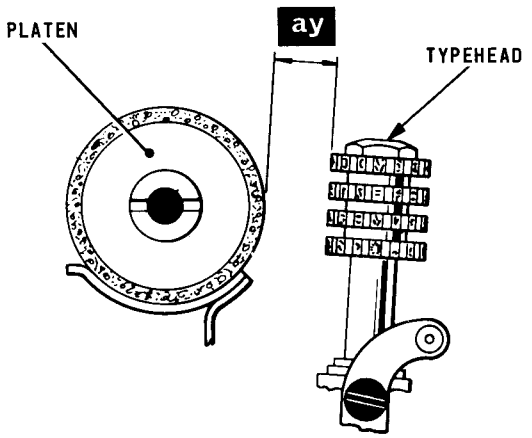


Fig. 4.48 TYPEHEAD/PLATEN CLEARANCE

Action

55.2 To adjust, continue to turn the machine by hand until the typehead moves forward to print. Stand the machine on its back, withdraw the screw securing the pin retainer, Fig.4.47, and remove the retainer from the print shackle. Disconnect the print beam from the print shackle and slacken the shackle locknut. Turn the shackle clockwise to increase or counter-clockwise to decrease the dimension. Re-connect the print beam to the shackle, refit the pin retainer and tighten the retainer screw.

55.3 Repeat Check 55.1 and, if necessary, Adjustment 55.2 until the correct dimension is set up. Tighten the shackle locknut.

## 56. PRINT BEAM STOP SCREW

Check

56.1 Depress the letter 'X' key or, if the machine has no keyboard, set up the letter 'X' combination (MSMMM) on the pins. Lift the translator clutch abutment and turn the machine by hand until the typehead moves forward to print. Using slip gauge TA1338, check that there is a clearance of .160 - .220 in. between the typehead and the platen.

Action

56.2 If this is not so, stand the machine on its back and disconnect the print spring. Add or remove .005 in. shims (Creed Part No. PW5199) as necessary under the print beam stop screw until the correct clearance is obtained. Re-connect the print spring.

## 57. TYPEHEAD CORRECTOR

Check

57.1 Slide the typehead to the middle of the line. Depress the letter 'X' key or, if the machine has no keyboard, set up the letter 'X' combination (MSMMM) on the pins. Lift the translator clutch abutment and turn the machine by hand until the typehead moves forward to print. Check that the typehead backlash is equal in both directions by carrying out the following procedure.

(a) Press the typehead casting towards the platen so that the letter is printed. Turn the platen knob until the paper has moved up one line.

(b) Pull the typehead back so that the corrector lever, Fig. 4.49, is out of engagement and, turning the typehead lightly to the left to take up the backlash, press the typehead casting towards the platen so that the letter is printed again on the lower line.

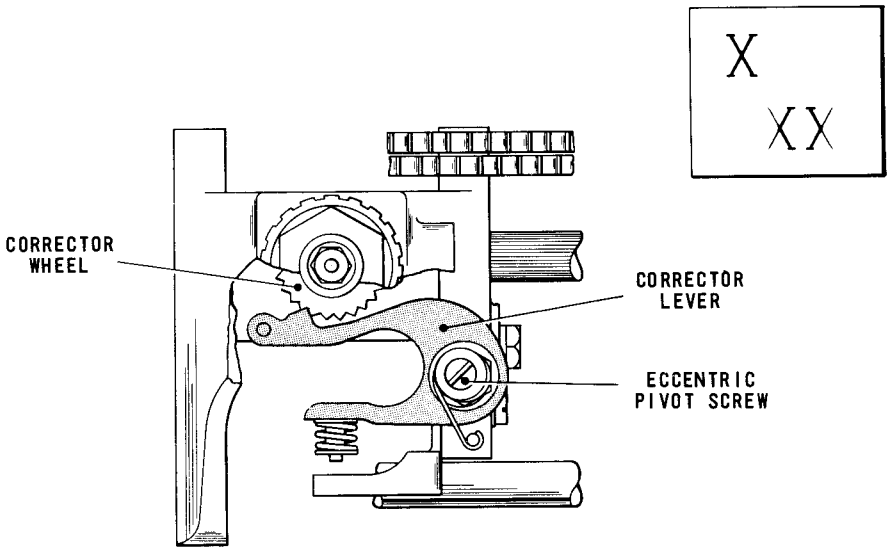


Fig. 4.49 TYPEHEAD CORRECTOR MECHANISM

(c) Repeat Check 57.1(b), this time turning the typehead to the right.

(f) Check that the image printed appears as shown in the inset to Fig. 4.49. This inset shows the image obtained when the backlash is equal in both directions.

Action

57.2 To adjust, slacken the nut securing the front splined shaft, Fig. 4.51, and turn the typehead clockwise or counter-clockwise until the backlash is equal in both directions. When this condition is satisfied, insert a tommy pin into the hole in the front splined shaft and, holding the shaft with the pin, tighten its securing nut.

Check

57.3 Press the typehead casting towards the platen again and check that the letter 'X' thus printed is equal in density on both sides of the character.

★ Differences in density between the upper and lower legs should be ignored at this stage.

Action

57.4 If this is not so, slacken the screw securing the eccentric pivot of the corrector lever, Fig. 4.49, and turn the pivot until the letter 'X' is correctly positioned. Holding the pivot in this position with a spanner, tighten its securing screw.

## 58. TYPEHEAD CORRECTOR TRACK RAIL

Check

58.1 Depress the letter 'X' key or, if the machine has no keyboard, set up the letter 'X' combination (MSMMM) on the pins. Lift the translator clutch abutment and turn the machine by hand until the typehead moves forward to print. Press the typehead casting forward so that the typehead moves towards the platen. Using slip gauge TA1337, check that when the corrector lever, Fig. 4.49, is fully engaged with the corrector wheel, the typehead is within .100 - .125 in. of the platen. Check for this condition with the typehead at both ends of its traverse.

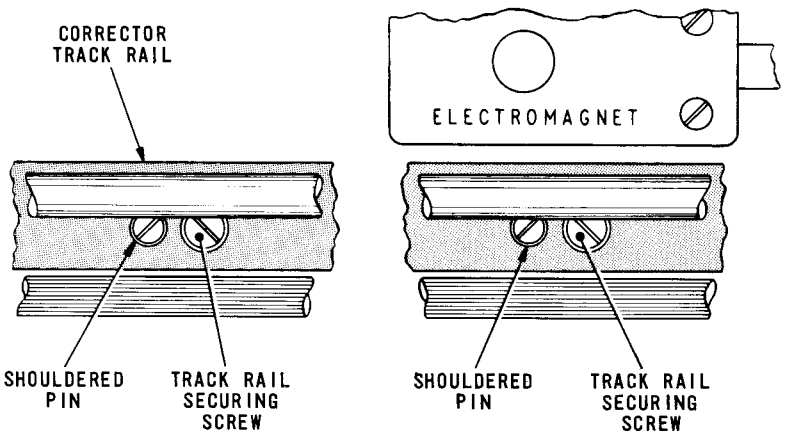


Fig. 4.50 TYPEHEAD CORRECTOR TRACK RAIL

Action

58.2 If this condition is not present, it will be necessary to adjust the height of the corrector track rail, Fig.4.50. To do this, slacken the two screws securing the track rail and adjust the height of the rail by means of the two shouldered pins. When the correct height is achieved, tighten the track rail securing screws.

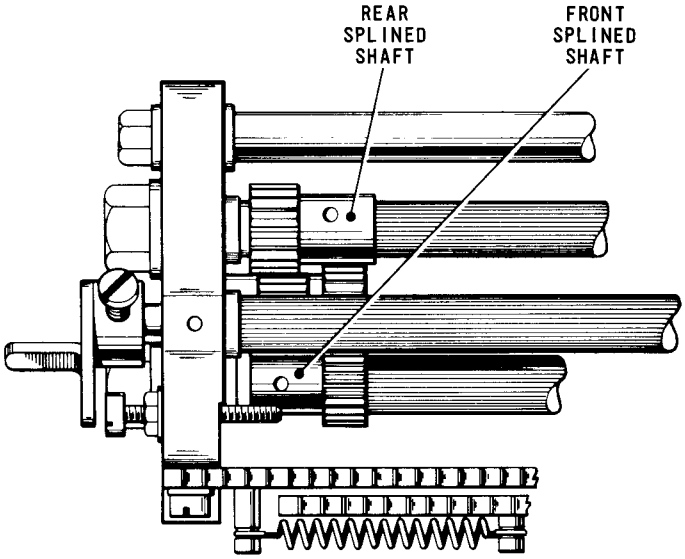


Fig. 4.51 TYPEHEAD CARRIAGE—PLAN VIEW

## 59. TYPEHEAD HEIGHT-INITIAL SETTING

Check

59.1 Depress the letter 'K' key or, if the machine has no keyboard, set up the letter 'K' combination (MMMMS) on the pins. Lift the translator clutch abutment and turn the machine by hand until the printing action has taken place and the aggregate motion levers have ceased to move. Press the typehead casting towards the platen so that the typehead moves against the paper and check that the density of the 'K' thus printed is equal at the top and bottom of the character.

Action

59.2 If this is not so, slacken the nut securing the rear splined shaft, Fig.4.51, until friction tight, insert a tommy pin into the hole in the shaft and turn the shaft until the condition is satisfied. Hold the shaft with the tommy pin and tighten its securing nut.

## †60. No.5 AGGREGATE MOTION LEVER

Check

60.1 Depress the letter 'K' key or, if the machine has no keyboard, set up the letter 'K" combination (MMMMS) on the pins. Lift the translator clutch abutment and turn the machine by hand until the printing action has taken place and the aggregate motion levers have ceased to move. Check that the typehead backlash is equal in both directions by carrying out the procedure described in paragraphs 57.1(a) to (c) above.

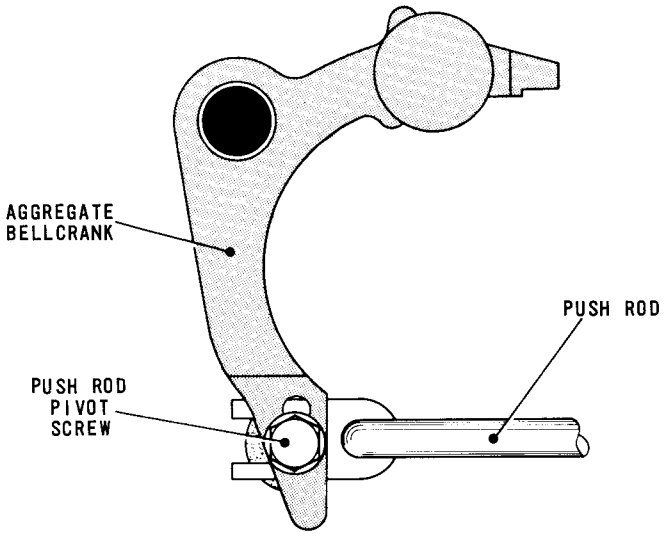


Fig. 4.52 PUSH ROD/AGGREGATE BELLCRANK LINKAGE—REAR VIEW

Action

60.2 To adjust, remove the reperforating attachment, slacken the pivot screw securing the push rod, Fig.4.52, to No.5 aggregate bellcrank (nearest the front of the machine) and adjust the pivot in its slot until the typehead backlash is equal in both directions. Tighten the pivot screw. Refit the reperforating attachment unless it is intended to check Adjustment Nos.61 to 64 below.

†61. No.4 AGGREGATE MOTION LEVER

Check

61.1 Depress the letter 'Q' key or, if the machine has no keyboard, set up the letter 'Q' combination (MMMSM) on the pins. Lift the translator clutch abutment and turn the machine by hand until the printing action has taken place and the aggregate motion levers have ceased to move. Check that the typehead backlash is equal in both directions by carrying out the procedure described in paragraphs 57.1(a) to (c) above.

Action

61.2 To adjust, remove the reperforating attachment, slacken the pivot screw securing the push rod, Fig.4.52, to No.4 aggregate bellcrank and adjust the pivot in its slot until the typehead backlash is equal in both directions. Tighten the pivot screw. Refit the reperforating attachment unless it is intended to check Adjustment Nos.62 to 64 below.

†62. No.1 AGGREGATE MOTION LEVER

Check

62.1 Depress the letter 'V' key or, if the machine has no keyboard, set up the letter 'V' combination (SMMMM) on the pins. Lift the translator clutch abutment and turn the machine by hand until the printing action has taken place and the aggregate motion levers have ceased to move. Check that the typehead backlash is equal in both directions by carrying out the procedure described in paragraphs 57.1(a) to (c) above.

Action

62.2 To adjust, remove the reperforating attachment, slacken the pivot screw securing to push rod, Fig. 4.52, to No. 1 aggregate bellcrank and adjust the pivot in its slot until the typehead backlash is equal in both directions. Tighten the pivot screw. Refit the reperforating attachment unless it is intended to check Adjustment Nos. 63 and 64 below.

†63. No. 3 AGGREGATE MOTION LEVER

Check

63.1 Depress the letter 'B' key or, if the machine has no keyboard, set up the letter 'B' combination (MSSMM) on the pins. Lift the translator clutch abutment and turn the machine by hand until the printing action has taken place and the aggregate motion levers have ceased to move. Check that the typehead backlash is equal in both directions by carrying out the procedure described in paragraphs 57.1(a) to (c) above.

Action

63.2 To adjust, remove the reperforating attachment, slacken the pivot screw securing the push rod, Fig. 4.52, to No. 3 aggregate bellcrank and adjust the pivot in its slot until the typehead backlash is equal in both directions. Tighten the pivot screw. Refit the reperforating attachment unless it is intended to check Adjustment No. 64 below.

†64. TYPEHEAD HEIGHT-PRELIMINARY SETTING

Check

64.1 Depress the letter 'K' key or, if the machine has no keyboard set up the letter 'K' combination (MMMMS) on the pins. Lift the translator clutch abutment and turn the machine by hand until the printing action has taken place and the aggregate motion levers have ceased to move. Press the typehead casting towards the platen so that the letter 'K' is printed.

64.2 Repeat this procedure, this time selecting the letter 'X' combination (MSMMM). Check that the printed letter 'X' is equal in density at the top and bottom, and that it is in line with the letter 'K' printed immediately before.

Action

64.3 To adjust, remove the reperforating attachment, slacken the pivot screw securing the push rod, Fig. 4.52, to No. 2 aggregate bellcrank and adjust the pivot in its slot until both the above conditions are satisfied. Tighten the pivot screw.

Check

64.4 Move the shift lever, Fig. 4.53, to the Figures position, i.e. to the right looking from the rear of the machine. Depress the figure '8' key or, if the machine has no keyboard, set up the letter combination (SMMSS) corresponding to the figure '8' on the pins. Lift the translator clutch abutment and turn the machine by hand until the printing action has taken place and the aggregate motion levers have ceased to move. Press the typehead casting towards the platen and check that the printed figure '8' is equal in density at the top and bottom and is in line with the letters 'K' and 'X' previously printed. If no adjustment is required, refit the reperforating attachment.

Action

64.5 To adjust, slacken the pivot screw securing the shift rod to the shift bellcrank and adjust the pivot in its slot until both the above conditions are satisfied. Tighten the pivot screw and refit the reperforating attachment.

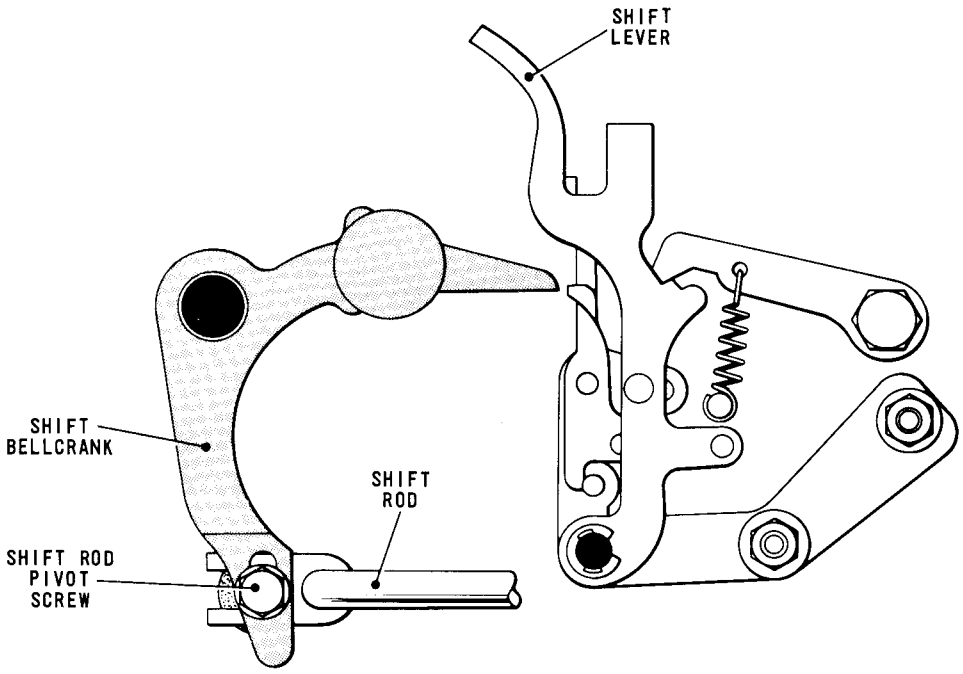


Fig. 4.53 SHIFT ROD/SHIFT BELLCRANK LINKAGE—REAR VIEW

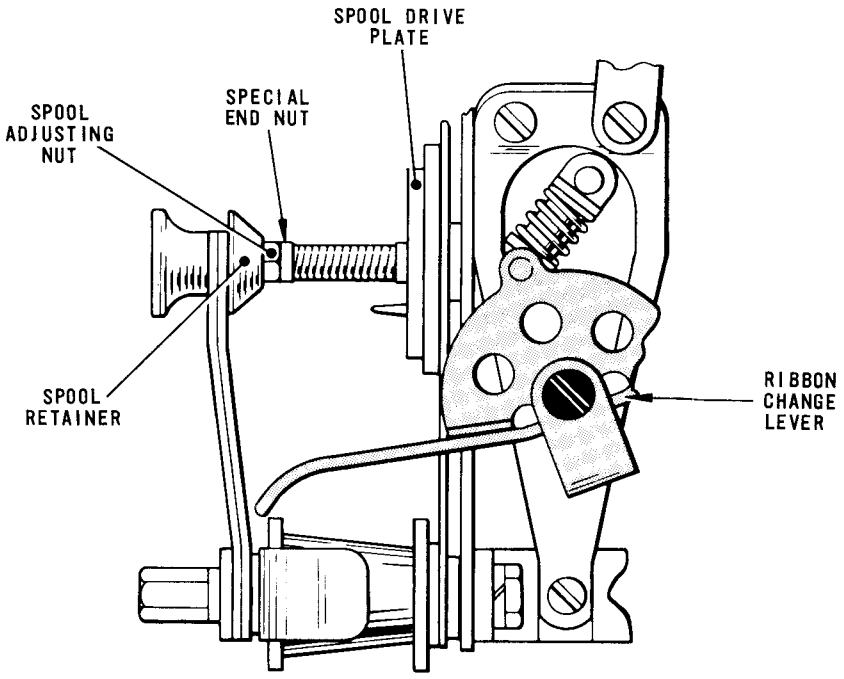


Fig. 4.54 RIBBON SPOOL CLEARANCE

## 65. RIBBON SPOOL DAMPING

Check

65.1 Move the ribbon change lever, Fig. 4.54, until the ratchet wheel is disengaged from the ratchet coupling and the left-hand spool is free to turn. Check that

a force of 1 - 2 ounces (28 - 57 grammes), applied to the left-hand spool at a radius of 0.75 in. (19.1 mm), just causes the spool to move. Repeat this check for the right-hand spool.

Action

65.2 To adjust, slacken the special end nut and turn the spool adjusting nut until the correct pressure is obtained. Tighten the special end nut.

## 66. RIBBON SPOOL CLEARANCE

Check

66.1 Remove the ribbon spools and check that there is a clearance of 0.63 - 0.64 in. (16 - 16.25 mm) between the inside face of the left-hand spool retainer, Fig. 4.54, and the left-hand spool drive plate. Repeat this check for the right-hand side of the ribbon unit. If no adjustment is required, refit the ribbon spools.

Action

66.2 If this is not so, remove the special end nut and add or subtract shims between the end nut and the spool adjusting nut until this clearance is satisfied. Refit the special end nut.

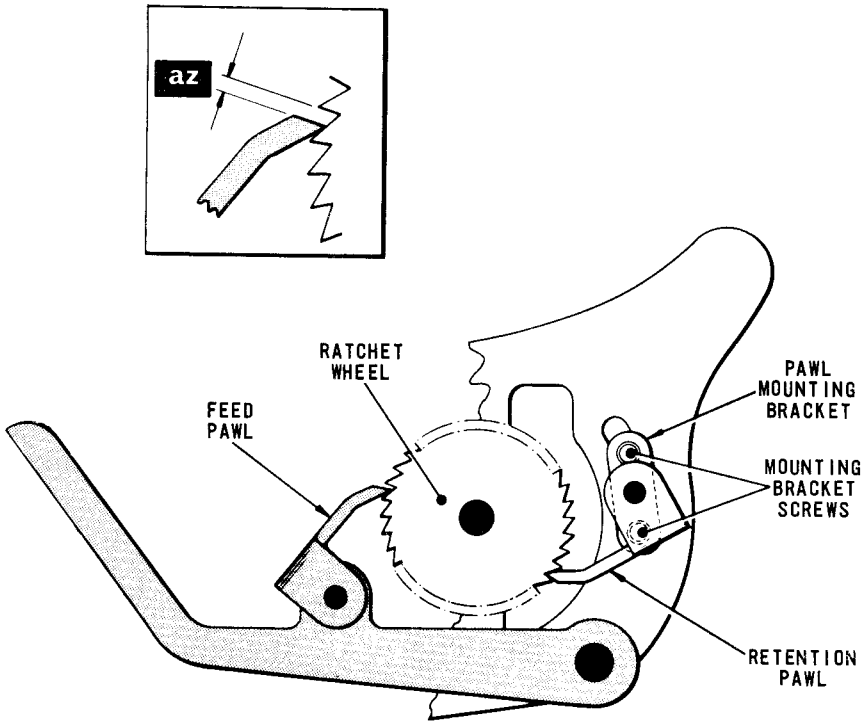


Fig. 4.55 RIBBON FEED AND RETENTION PAWLS

## 67. RIBBON UNIT PAWLS

Check

67.1 Remove the ribbon spools. Depress any printing key or, if the machine has no keyboard, set up any printing combination on the pins. Lift the translator

clutch abutment and turn the machine by hand until the printing action has taken place. Press the typehead casting so that the typehead is held against the platen, and rotate the ratchet wheel, Fig.4.55, against the retention pawl. Check that there is now a clearance of .005 – .010 in. (dimension 'az') between the face of the feed pawl and the face of the next tooth in the ratchet wheel. If no adjustment is required, refit the ribbon spools.

Action

67.2 To adjust, slacken the two screws securing the pawl mounting bracket and move the bracket until dimension 'az' is satisfied. Tighten the bracket screws and refit the ribbon spools.

## 68. RIBBON JUMPER ARM

Check

68.1 Depress any printing key or, if the machine has no keyboard, set up any printing combination on the pins. Lift the translator clutch abutment and turn the machine by hand until the printing action has taken place. Press the typehead casting so that the typehead is held against the platen and check that the upper edge of the ribbon is approximately .030 in. above the type face which is in contact with the platen.

Action

68.2 If this is not so, slacken the two screws securing the jumper arm, Fig.4.56, and adjust the arm until the above condition is satisfied. Tighten the arm screws.

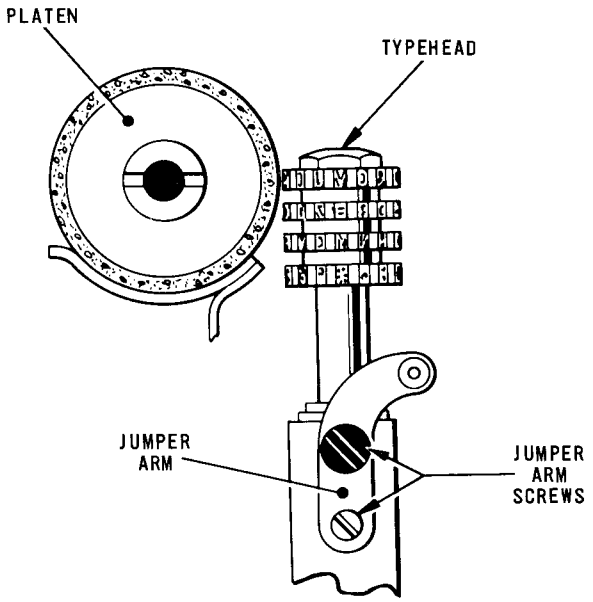


Fig. 4.56 RIBBON JUMPER ARM

# SECTION 3

## 69. KEYBOARD COMBINATION BAR RESET

Check

69.1 Slacken the four screws (two at each end) securing the keyboard mask and lift off the mask. Depress the letter 'X' (MSMMM) key, lift the translator clutch abutment and turn the machine slowly by hand until the top of No.1 transmitter lever (3rd from the rear), Fig.4.65, is fully in.

69.2 Continue to turn the machine, watching No.2 transmitter lever (4th from the rear) move slowly inwards, and stop turning when Nos.1 and 2 transmitter levers are in line. Check, by observation, that the combination bar lever latch has now reset. If no adjustment is required, refit the keyboard mask and secure it with its four screws.

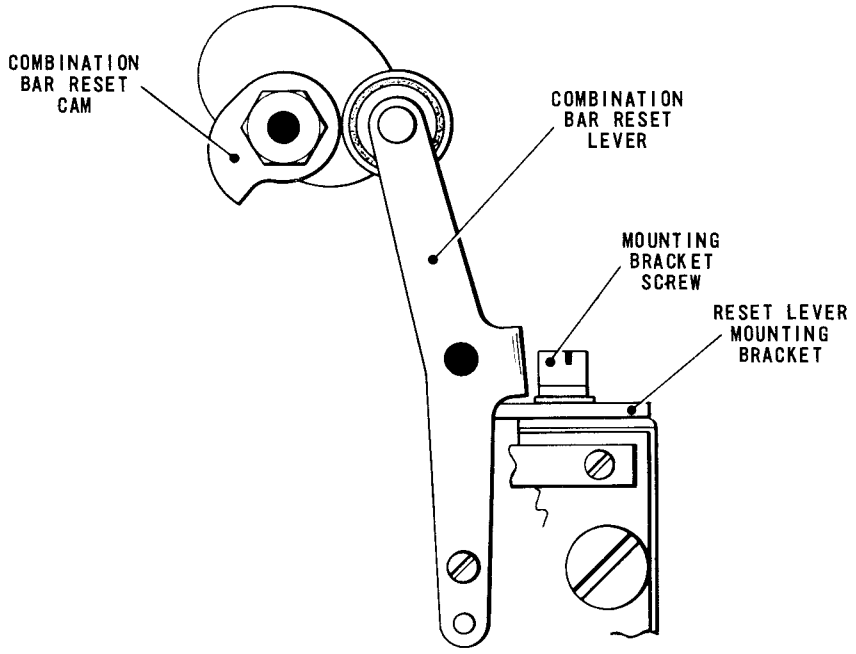


Fig. 4.57 COMBINATION BAR RESET MECHANISM

69.3 Continue to turn the machine until the combination bar reset lever, Fig.4.57, is on the highest point of the reset cam. Depress each key in turn and check that with the key held down it is possible to move the roller on the reset lever away from its cam by a minimum of .005 in.

69.4 Return the machine to the rest position and depress the letter 'Z' (MSSSM) key. Pull the reset lever away from its cam and check, by observation of the pushrods, Fig.4.59, that Nos.1 and 5 combination bars start to reset simultaneously. This is to ensure that the reset lever mounting bracket, Fig.4.57, is positioned squarely with respect to the ends of the combination bars.

Action

69.5 To adjust, depress any key, lift the translator clutch abutment and turn the machine by hand until the condition set up in Check 69.3 is reached. Slacken the two screws securing the reset lever mounting bracket and move the bracket until the roller on the reset lever can be pulled away from its cam by an estimated .010 in. Lightly clamp the bracket screws.

69.6 Repeat Checks 69.1 to 69.4 and, if necessary, refine the adjustment of the mounting bracket until all the conditions are satisfied. Tighten the bracket screws fully and refit the keyboard mask.

## †70. KEYBOARD TRIP LEVER PIVOT — DYNAMIC CHECK

Check

70.1 With the keyboard fitted to the machine, repeat Check 21.1 under power conditions.

Action

70.2 To adjust, remove the keyboard and carry out Adjustment 21.2. Refit the keyboard.

## †71. SELECTOR BAR/SELECTION PIN ALIGNMENT

Check

71.1 With the machine in the rest position, check that the selector bars, Fig. 4.58, are in alignment with the selection pins. Lift the translator clutch abutment and turn the machine by hand until the pin-box has moved to its alternative position and re-check the alignment of the bars and the selection pins.

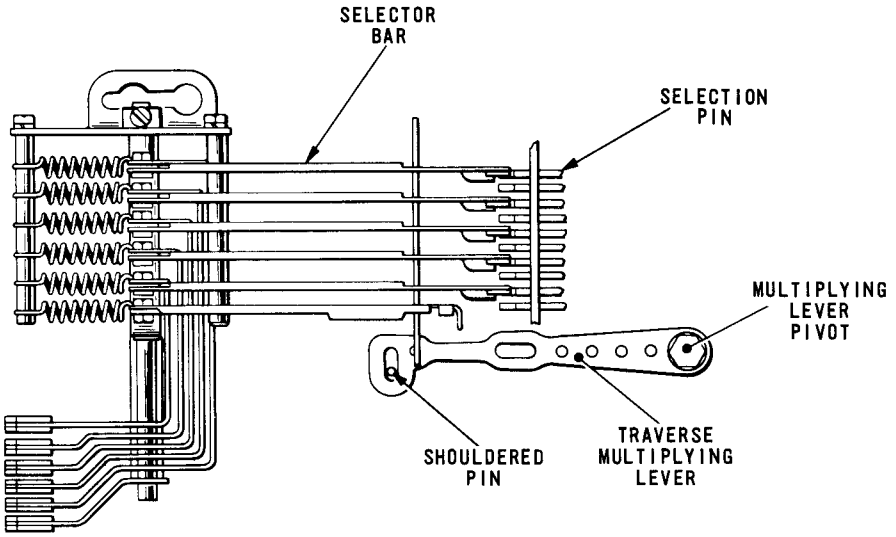


Fig. 4.58 SELECTOR BAR/SELECTION PIN ALIGNMENT

Action

71.2 To adjust, remove the operation counter, slacken the nut securing the shouldered pin and the nut securing the multiplying lever eccentric pivot. Taking up any free play in the direction of traverse, reposition the multiplying lever to obtain the required alignment. Position the shouldered pin so that play between the pin and the ends of the slot in the multiplying lever is equal in both positions of the pin-box. Tighten both nuts and refit the operation counter.

## 72. SELECTOR BAR/SELECTION PIN CLEARANCE

Check

72.1 Depress the Letters (MMMMM) key and, by applying finger pressure to each of the five selector bars in turn as shown in Fig. 4.59, check that there is an

estimated free movement of .005 - .020 in. (dimension 'ba') between the end of each bar and the corresponding selection pin.

72.2 Lift the translator clutch abutment and turn the machine by hand until the pin-box has moved to its alternative position and repeat Check 72.1.

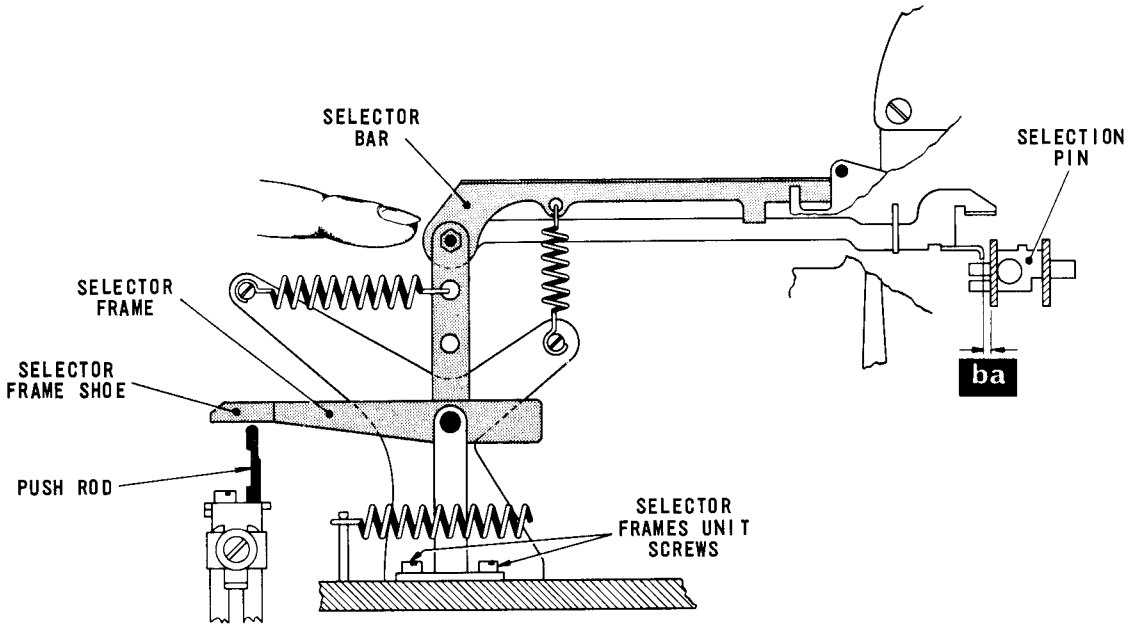


Fig. 4.59 SELECTOR BAR/SELECTION PIN CLEARANCE

Action

72.3 To adjust, slacken the four screws (two only shown in the figure) securing the selector frames unit and reposition the unit until the correct clearance is obtained. Tighten the four screws.

Check

72.4 Check that the five selector frame shoes and the push rods are in alignment.

Action

72.5 To adjust, set the selector frames to obtain alignment.

## 73. LAG WEIGHT RELEASE LEVER STOP

Check

73.1 With the machine in the rest position, check that there is an estimated engagement of .030 - .045 in. (dimension 'bb') between the latching face of the lag weight release lever, Fig. 4.60, and the projection on the lag weight hook plate.

Action

73.2 To adjust, slacken the nut clamping the release lever eccentric stop and turn the stop until dimension 'bb' is set up. Secure the stop in this position with its clamp nut.

## 74. LAG WEIGHT TRIP

Check

74.1 Hold the lag weight, Fig.4.60, to prevent it moving and depress any key on the keyboard. Check that the lag weight release lever is now lifted clear of the projection on the lag weight hook plate by an estimated .015 - .045 in. (dimension 'bc' - inset).

74.2 If an answer-back unit is fitted, check that the lifting of the release lever by the action of the answer-back wards causes a similar clearance (dimension 'bc' - inset) to be set up between the release lever and the hook plate.

Action

74.3 To adjust, slacken the screw securing the release lever and reposition the lever on its shaft until the above conditions are achieved. Tighten the release lever screw.

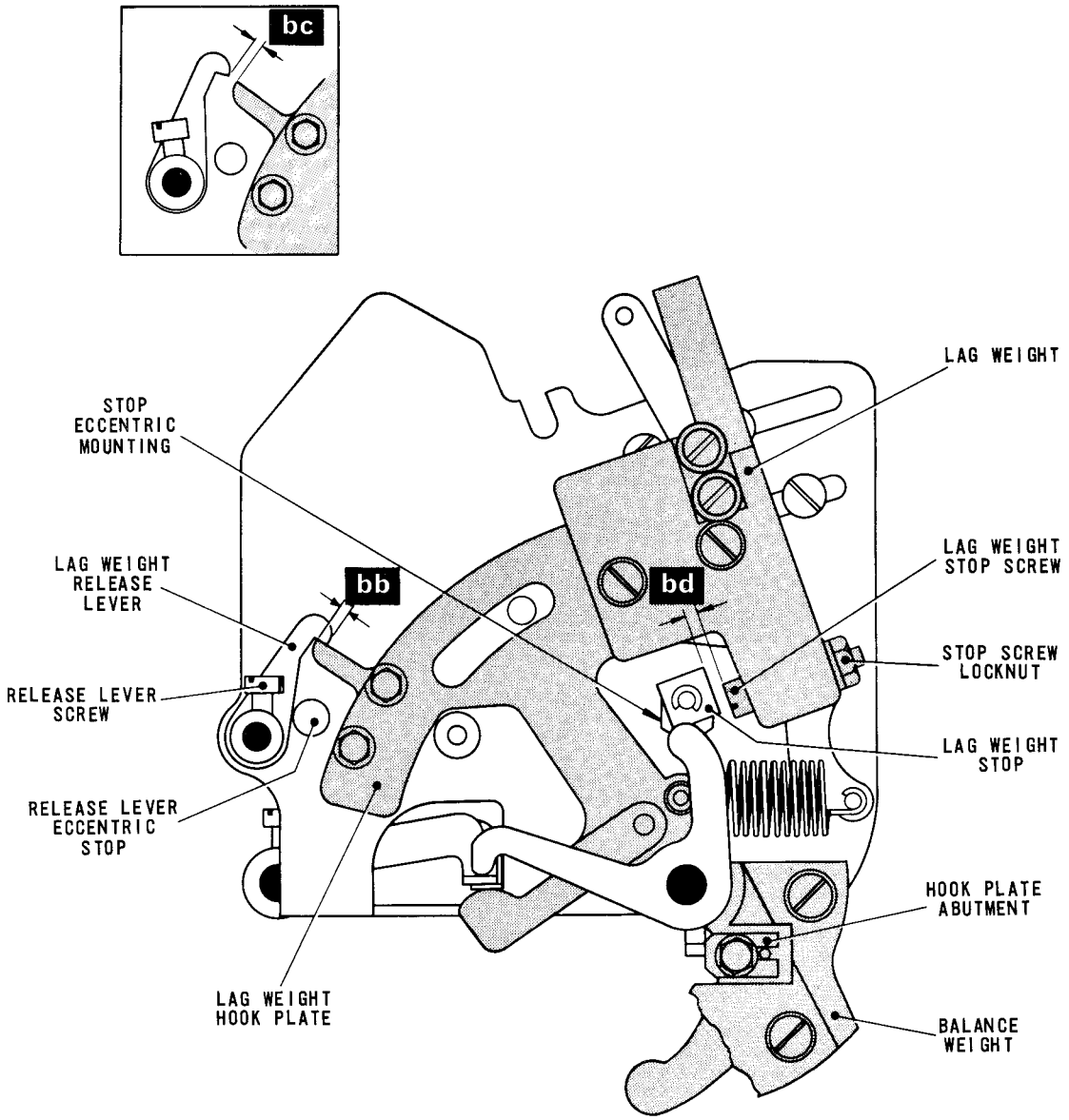


Fig. 4.60 LAG WEIGHT MECHANISM

## †75. LAG WEIGHT MOVEMENT

Check

75.1 Ensure that the translator camshaft is in the rest position. Depress the letter 'X' (MSMMM) key and check that the lag weight hook plate, Fig.4.60, is now in contact with the lag weight stop.

75.2 Turn the machine slowly by hand until the function reset bar starts to move towards the rear of the machine. Check that the lag weight hook plate is still in contact with the lag weight stop.

75.3 Continue to turn the machine slowly by hand until the typehead moves forward to print. Check that there is now a clearance between the plate and the stop.

Action

75.4 If this is not so, return the machine to the rest position and remove the transmitter unit. Depress the letter 'X' (MSMMM) key again and turn the machine slowly by hand, this time until the function reset bar has **just ceased** to move towards the rear of the machine.

75.5 With the machine in this position, slacken the nut clamping the stop and turn its eccentric mounting (using the lower half of the eccentric movement) until the stop is just touching the edge of the plate. Tighten the clamp nut and refit the transmitter unit.

★ Whilst carrying out this adjustment, hold the stop with a spanner to prevent it rotating.

Check

75.6 Continue to turn the machine by hand until the top of the lag weight is in its extreme left-hand position. Check that there is now a clearance of .002 - .006 in. (dimension 'bd') between the stop and the lag weight stop screw.

Action

75.7 If necessary, slacken the stop screw locknut and adjust the stop screw until dimension 'bd' is set up. Tighten the locknut.

## 76. TRANSLATOR TRIP FROM LAG WEIGHT

★ In the following adjustment it is important to ensure that the translator trip occurs on the last .030 in. of movement of the top of the lag weight, otherwise the lag weight timing may be upset - Adjustment No.84 refers. If the translator trip does not occur within this limit, re-check Adjustment Nos.36 and 38 before attempting to adjust the translator trip from the lag weight.

Check

76.1 Depress any key on the keyboard and, with the lag weight hook plate, Fig.4.60, against the lag weight stop, check that there is a maximum clearance of .003 in. (dimension 'be') between the starter arm pin, Fig.4.61, and the worm wheel.

Action

76.2 To adjust, return the machine to the rest position and remove the balance weight, Fig.4.60. Slacken the screw clamping the abutment and move the abutment to its extreme right-hand position. Depress any key again and, with the lag weight hook plate held against the stop, adjust the abutment until the required clearance between the starter arm pin, Fig.4.61, and the worm wheel is obtained. Clamp the abutment, Fig.4.60, in this position with its screw and refit the balance weight.

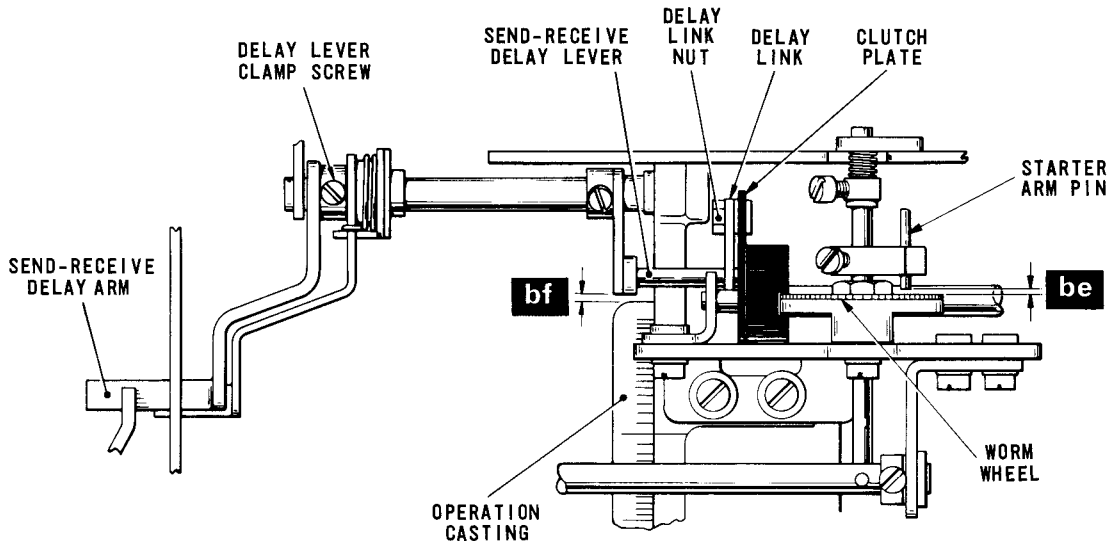


Fig. 4.61 SEND-RECEIVE SWITCH DELAY LINKAGE

## 77. SEND-RECEIVE DELAY LEVER CLEARANCE

Check

77.1 Depress any key on the keyboard and turn the machine by hand until the send-receive delay lever, Fig.4.61, is in its lowest position. Check that there is now a radial clearance of .015 - .045 in. (dimension 'bf') between the delay lever and the left-hand side of the orientation casting.

Action

77.2 To adjust, slacken the delay lever clamp screw, hold down the delay arm and reposition the delay lever until the correct clearance is achieved. Tighten the clamp screw.

## 78. SEND-RECEIVE SWITCH CONTACTS

Check

78.1 With the machine in the rest position and the delay arm, Fig.4.62, fully restored by the crawler clutch and in contact with the lag weight extension, check that there is a clearance of approximately .010 in. (dimension 'bg') between the receive contact blade and its buffer plate.

★ If the delay arm and lag weight extension are not in contact with each other when the machine is in the rest position, switch on the motor for a few seconds to allow the slow-return crawler clutch mechanism to reset.

Action

78.2 If necessary, set the buffer plate to achieve dimension 'bg'.

Check

78.3 Hold the lag weight to prevent its movement and depress any key on the keyboard. Allow the lag weight to move slowly to the right until the receive contact blade is against its buffer plate but the tongue and receive contacts are still made. Check that there is now a clearance of .010 - .015 in. (dimension 'bh' - inset) between the tongue and the send contact blade.

Action

78.4 To adjust, set the send contact blade until dimension 'bh' is achieved.

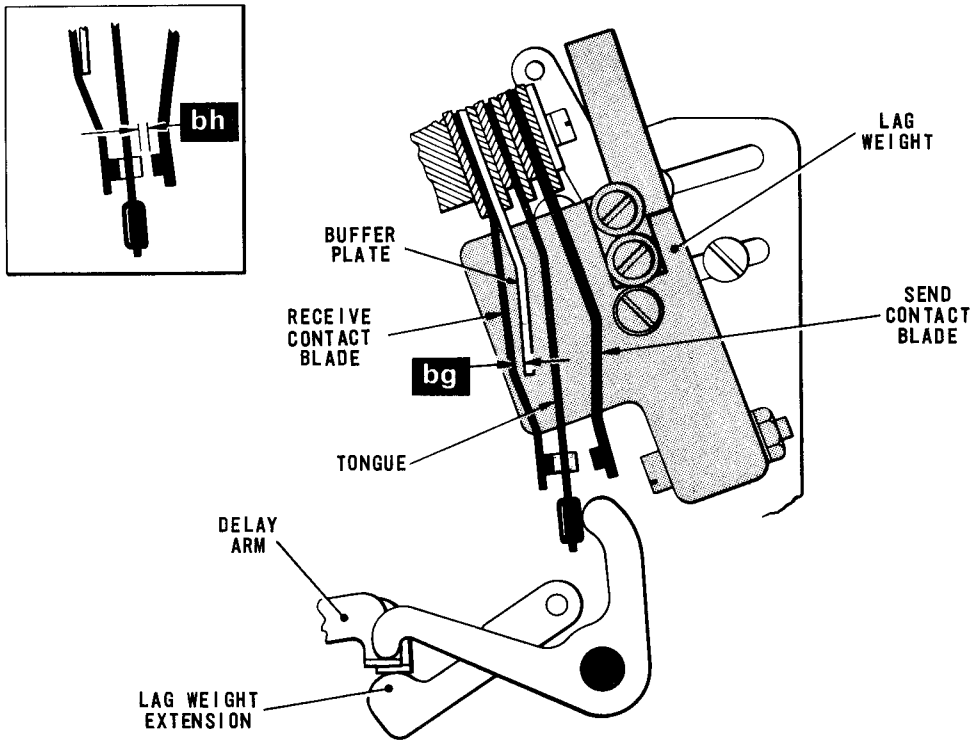


Fig. 4.62 SEND-RECEIVE SWITCH CONTACTS

Check

78.5 Release the lag weight so that the tongue fully engages the send contact blade. Check that a force of 1 - 1½ ounces (28 - 43 grammes) applied to the tip of the tongue will move the tongue over to the receive contact blade.

Action

78.6 To adjust, set the tongue, ensuring that the send contact follows the movement of the tongue and maintains contact with it over the first part of its traverse. Re-check Adjustments 78.1 and 78.3.

## 79. SEND-RECEIVE CONTACT DELAY

Check

79.1 With the machine in the rest position and the delay arm, Fig.4.62, in contact with the lag weight extension, trip the lag weight by depressing any key on the keyboard. Turn the machine by hand until the translator clutch has completed one revolution and check that the tongue is still touching the send contact blade.

79.2 Lift the translator clutch abutment, turn the machine by hand and check that, during the second revolution of the translator clutch, the tongue breaks from the send contact between the changeover of Nos.4 (2nd from the front) and 5 (nearest the front) transmitter levers, Fig.4.65.

Action

79.3 If the contact changeover is early, slacken the nut securing the link, Fig.4.61, to the clutch plate and slide the link to the right. Tighten the nut. Repeat Checks 79.1 and 79.2 and, if necessary, Adjustment 79.3 until both the above conditions are satisfied.

79.4 If the contact changeover is late, repeat Adjustment 79.3 but this time slide the link to the left.

★ If the conditions in Checks 79.1 and 79.2 cannot be met by carrying out the above adjustments, excessive backlash may be present in the gearing that drives the crawler clutch drum. The end-play in the vertical spindle should not exceed .002 in. and is maintained by raising or lowering the worm spindle bearing. If the conditions still cannot be met, refine Adjustment No.77 and then repeat Adjustment No.79.

## 80. SEND-RECEIVE CONTACT DELAY - DYNAMIC CHECK

Check

80.1 Switch on the motor and check its speed as recommended in Adjustment No.81.

80.2 Set up a Telegraph Distortion Measuring Set (TDMS) as shown in Fig.4.63. Set the TDMS Controls as follows.

(D) to Start/Stop
(F) to Relay Test
Signal 2 to Transit Time

80.3 Connect the TDMS by means of crocodile clips to the top ends of the send-receive switch contacts, as follows.

| TDMS Terminals | Send-Receive Switch Contacts |
|---|---|
| Mark | Send |
| Tongue | Tongue |
| Space | Receive |

★ For customers who may wish to construct an adaptor for this adjustment, contact can be made with the send-receive switch connexions at any of the following alternative points.

| Send-Receive Switch Contacts | 18-way Transmitter Connector | External 12-way Socket | External 12-way Plug |
|---|---|---|---|
| Send | Pin D3 | Pin F | Pin F |
| Tongue | Pin D2 | Pin E | Pin E |
| Receive | Pin D1 | Pin D | Pin D |

80.4 Place a .025 in. clip (Creed Part No. TA1384) over the end of the tongue, Fig.4.62, and run out the letters code (MMMMM) for about 30 seconds. Check that a single trace appears at the beginning of the transmission and a second trace at the end. If no spurious traces appear, disconnect the TDMS from the send-receive switch.

Action

80.5 If spurious traces do appear during Check 80.4, carry out Check 80.6 to determine whether they are caused by an insufficient delay on the crawler clutch, or by intermittent contact between the tongue and send contacts.

Check

80.6 Using a spring hook, hold the contact operating lever away from the tongue and repeat Check 80.4.

Action

80.7 If the spurious traces have now disappeared, indicating an insufficient delay on the crawler clutch as their cause, carry out Adjustment No.79. If the spurious traces are still present, indicating intermittent contact between the tongue and send contacts, carry out Adjustment No.78. Disconnect the TDMS from the send-receive switch.

# SECTION 4

## 81. MOTOR SPEED

★ (1) A fork stroboscope engraved 140 dvs (Creed Part No. TA1117/140) will be required to carry out the motor speed check.

(2) The direction of rotation of the motor is indicated by an arrow painted on the motor housing.

Check

81.1 Switch on the motor and check that the selector and translator clutches are at rest against their respective detents.

81.2 Hold the fork stroboscope by its handle and set it vibrating by striking the tines sharply against the edge of your hand. View the regular black and white bands on the motor governor cover through the slit in the masking plate which is mounted on the end of each tine. The bands on the governor cover should appear to be moving slowly in the direction of rotation of the motor, indicating that the motor is running slightly fast.

81.3 Lift the translator clutch abutment and repeat the inspection of the governor bands through the vibrating stroboscope. With the additional load imposed by the translator unit, the governor bands should now appear to be moving slowly against the true direction of rotation of the motor.

★ This procedure checks the motor speed under minimum and maximum load conditions, as the load will vary slightly depending upon the combination set up on the selection pins.

Action

81.4 If the speed is found to be incorrect, do not alter the adjustment of the motor governor until the following checks have been made.

(a) Measure the actual voltage of the supply. In cases where power is obtained from a mobile generating set, an error in motor speed is often traceable to excessive voltage fluctuation in the supply.

(b) Check that the governor contacts are operating correctly and in good condition. Adjustment Nos.18 and 19 refer.

(c) Check over the governor circuit wiring and components, Part 1, Fig.1.10.

If no fault can be located by this procedure, adjust the governor by means of the screw visible through the hole in the governor housing. Turn the screw clockwise (viewed from the rear) to increase speed and counter-clockwise to decrease speed.

## 82. TRANSMITTER CONTACTS AND SIGNALS LENGTH (TDMS)

★ This adjustment describes the method to adopt when using a Telegraph Distortion Measuring Set (TDMS), A.T. and E. Type 6B, to adjust the transmitter contacts and signals length. If any other type of TDMS is used, the references and Fig.4.63 may be different but the method will remain operative.

Check

82.1 Switch on the motor and check its speed as recommended in Adjustment No.81.

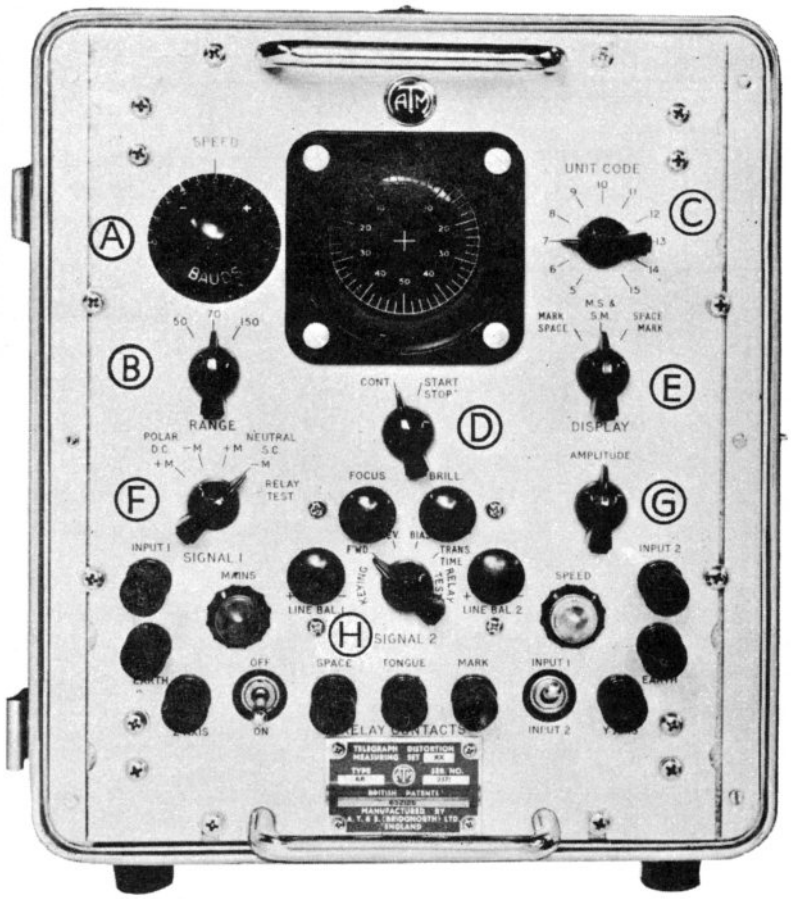


Fig. 4.63 TELEGRAPH DISTORTION MEASURING SET, TYPE 6B

82.2 Set up the TDMS as shown in Fig.4.63. Refer to Fig.4.64 and connect the TDMS by means of crocodile clips to the top ends of the transmitter contacts.

★ For customers who may wish to construct an adaptor for this adjustment, contact can be made with the transmitter connexions at any of the following alternative points.

| Transmitter Contacts | 18-way Transmitter Connector | External 12-way Socket | External 12-way Plug |
|---|---|---|---|
| Space | Pin B3 | Pin C | Pin C |
| Tongue | Pin B2 | Pin B | Pin B |
| Mark | Pin B1 | Pin A | Pin A |

82.3 Set the TDMS Line Balance Control, Fig.4.63, to the centre of its range. To do this, lift the translator clutch abutment so allowing the machine to generate 6½ unit signals. Turn the Line Balance Control counter-clockwise and note the position of the control when the signals disappear from the circular trace. Turn the control clockwise and again note when the signals disappear. Adjust the control midway between these two points.

82.4 Refine the Speed Control (A) until the two-group display is stationary.

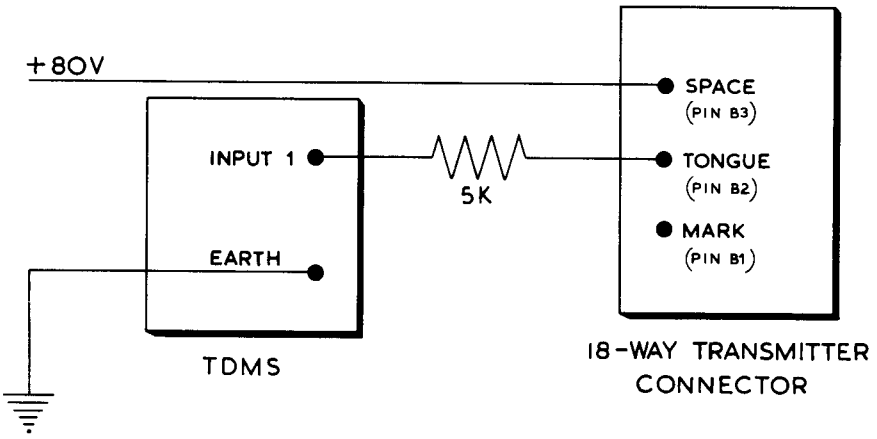


Fig. 4.64 TDMS/TRANSMITTER CONNEXIONS FOR SIGNALS LENGTH CHECK

82.5 Switch the TDMS Control (D) to Start/Stop display. Run out the Letters code (MMMMM) from the keyboard and check that the Start signal is the correct length, i.e.

(a) For *double-current* operation, 1 unit less 2-5%.

(b) For *single-current* operation, 1 unit plus 1-2%.

Action

82.6 If this is not so, adjust the signal length by means of the Start (2nd from the rear) contact screw, Fig.4.65.

Check

82.7 Run out the letter 'V' code (SMMMM) from the keyboard and check that element No.1 is the correct length.

Action

82.8 Adjust the contact screw on No.1 transmitter lever (3rd from the rear) until the correct length is achieved.

Check

82.9 Run out the letter 'X' code (MSMMM) from the keyboard and check that element No.2 is the correct length.

Action

82.10 Adjust the contact screw on No.2 transmitter lever (4th from the rear) until the correct length is achieved.

Check

82.11 Run out the Figures code (MMSMM) and check element No.3.

Action

82.12 Adjust the contact screw on No.3 lever (3rd from the front).

Check

82.13 Run out the letter 'Q' code (MMMSM) and check element No.4.

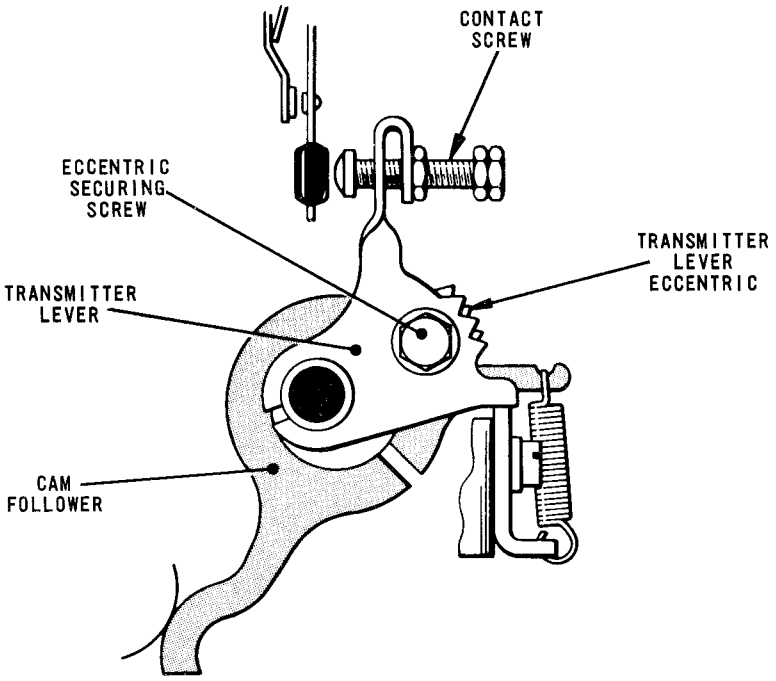


Fig. 4.65 TRANSMITTER LEVER/CAM ASSEMBLY

Action

82.14 Adjust the contact screw on No.4 lever (2nd from the front).

Check

82.15 Run out the letter 'K' code (MMMMS) and check element No.5.

Action

82.16 Adjust the contact screw on No.5 lever (nearest the front).

Check

82.17 Disconnect +80V from the Space contact, Fig.4.64, and connect -80V to the Mark contact. Run out the All Space code (SSSSS) from the keyboard and check that the beginning of the Stop signal is at top dead centre.

Action

82.18 Adjust the Stop contact screw (nearest the rear), Fig.4.65, until the correct condition is achieved.

Check

82.19 (a) *Single-Current.* Depress each key in turn, examine the display and verify that distortion does not exceed ±5%.

(b) *Double-Current.* Reconnect +80V to the Space contact, Fig.4.64, and switch the TDMS Range Control (F), Fig.4.63, to D.C.-M. Depress each key in turn, examine the display and verify that distortion does not exceed ±5%.

82.20 Switch the TDMS Unit Code (C) to 14 Units. Run out the 'R' code (SMSMS) from the keyboard and check that the second group of spots on the display appears at bottom dead centre.

Action

82.21 To adjust, move the speed-change lever, Fig.4.68, towards the front of the machine so that it is freed from its stop screws, and adjust the lever until the condition is satisfied. Secure the lever in its new position with its stop screws.

Check

82.22 Switch the TDMS Unit Code (C), Fig.4.63, to 7 Units. Connect the TDMS by means of crocodile clips to the top ends of the transmitter contacts, as follows.

| TDMS Terminals | Transmitter Contacts |
|---|---|
| Space | Space |
| Tongue | Tongue |
| Mark | Mark |

82.23 Switch the TDMS Controls (F) to Relay Test and (H) to Transit Time. Check that the transit times are not less than 2% or more than 6%.

Action

82.24 If this is not so, refine the adjustment of the signals length.

★ The cam followers, Fig.4.65, are adjusted in the factory and should not require re-adjustment unless the translator cam pack has been disturbed. If, however, the **position** (as distinct from the **length**) of any element is incorrect, it can be corrected by adjusting the respective transmitter lever, using the following procedure.

(a) Turn the translator camshaft by hand until the transmitter lever to be adjusted is as shown in Fig.4.67. This figure indicates for each transmitter lever, Fig.4.65, the point in the translator camshaft revolution where the respective cam follower associated with that lever is on the root diameter of its cam, and thus the lever will be in a position in which it can safely be adjusted.

(b) Slacken the screw securing the transmitter lever eccentric and, holding down the transmitter lever and the cam follower, insert a screwdriver between the adjustment teeth and reposition the eccentric. To advance the signal, the eccentric should be raised. Tighten the eccentric securing screw.

## †83. TRANSMITTER CONTACTS AND SIGNALS LENGTH (TIMING DISC)

★ A timing disc (Creed Part No. TA1316) is provided as an alternate means of adjusting the transmitter contacts in locations where a Telegraph Distortion Measuring Set (TDMS) is not available.

Check

83.1 Check the transmitter output and ensure that each signal element is the correct length and commences at the correct theoretical position, i.e.

(a) For *double-current* operation, each signal is separated from its adjacent signals by an interval of 2 - 5% of the nominal element length.

(b) For *single-current* operation, each signal overlaps its successor by 1 - 2% of the nominal element length.

Action

83.2 Remove the keyboard and refit the right-hand keyboard securing screw, Fig.4.66. Position the screw so that its slot is in line with the centre of the translator camshaft.

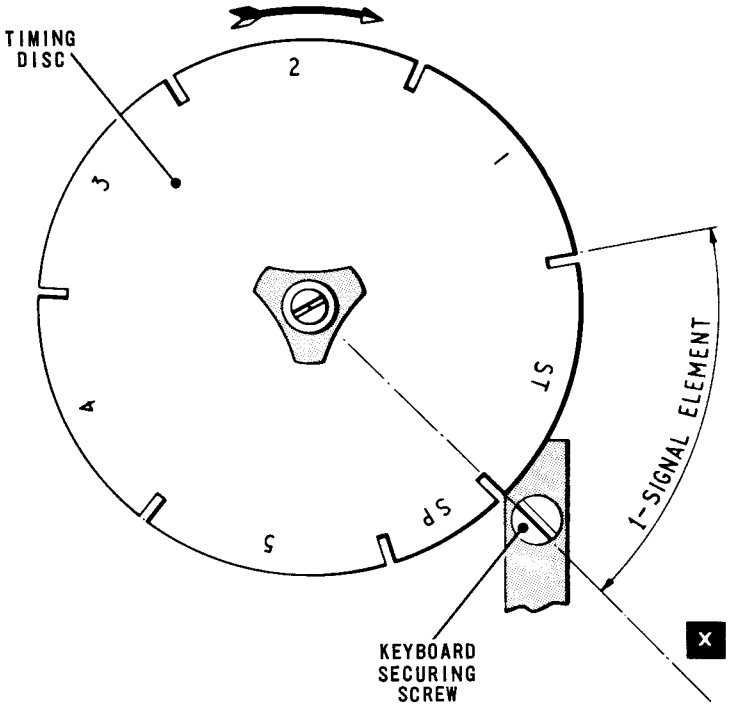


Fig. 4.66 TRANSMITTER TIMING DISC, TA 1316

83.3 Remove the nut at the front end of the camshaft and fit the timing disc in its place. This disc has a friction clutch and it is therefore possible to turn it independently of the camshaft.

83.4 Remove the seven screws securing the top ends of the transmitter contacts and disconnect the contacts. Set up the Letters code (MMMMM) on the pins.

(a) Double-Current Operation

Check

83.5 Connect any type of continuity tester across the Start contacts (2nd from the rear) and turn the machine slowly by hand until the top of the Start transmitter lever, Fig.4.65, is fully in.

83.6 Position the timing disc, Fig.4.66, so that the beginning of the Start signal is in line with the left-hand edge of the slot in the keyboard securing screw, i.e. datum line 'X', as shown in the figure.

83.7 Continue to turn the machine slowly by hand and check that the Start contacts open when the end of the signal is approximately .060 in. from the datum line 'X'. This corresponds to a shortening of the Start signal of approximately 2 – 5%.

Action

83.8 If this is not so, adjust the signal length by means of the Start contact screw, Fig.4.65.

Check

83.9 Return the machine to the rest position and again set up the Letters code (MMMMM) on the pins. Transfer the continuity tester to the contacts of No.1 element (3rd from the rear). Turn the machine slowly by hand until the contacts of No.1 element just close, and check the element length against the timing disc in a similar manner to that adopted for the Start contacts.

Action

83.10 Adjust the contact screw on No.1 transmitter lever until the correct length is achieved.

Check

83.11 Return the machine to the rest position, set up the Letters code (MMMMM) on the pins again and repeat Checks 83.5 and 83.6.

83.12 Transfer the continuity tester to No.1 element contacts. Continue to turn the machine slowly by hand and check that the contacts of No.1 element close as the beginning of No.1 element comes into line with the datum line 'X'.

| Transmitter Lever to be adjusted | Position of Translator Camshaft during Adjustment |
|---|---|
| No. 1 | No. 5 lever just starting to move |
| No. 2 | Camshaft at rest |
| No. 3 | START lever just starting to move |
| No. 4 | No. 1 lever just starting to move |
| No. 5 | No. 2 lever just starting to move |
| STOP | No. 3 lever just starting to move |
| START | No. 4 lever just starting to move |

Fig. 4.67 TRANSMITTER LEVER/CAMSHAFT RELATIONSHIP

Action

83.13 If this is not so, correct the position of the element by adjusting No.1 transmitter lever, Fig.4.65, using the following procedure.

★ The cam followers are adjusted in the factory and should not require re-adjustment unless the translator cam pack has been disturbed.

(a) Turn the translator camshaft by hand until the transmitter lever to be adjusted is as shown in Fig.4.67. This figure indicates for each transmitter lever, Fig.4.65, the point in the translator camshaft revolution where the respective cam follower associated with that lever is on the root diameter of its cam, and thus the lever will be in a position in which it can safely be adjusted.

(b) Slacken the screw securing the transmitter lever eccentric and, holding down the transmitter lever and the cam follower, insert a screwdriver between the adjustment teeth and reposition the eccentric. To advance

the signal, the eccentric should be raised. Tighten the eccentric securing screw.

(c) Check the position of the element by repeating Checks 83.11 and 83.12 and, if necessary, refine (a) and (b) above until the position is correct.

83.14 Adjust the length of No.2 element and position it with respect to No.1. Repeat this procedure with each signal element in turn until all the elements and the gaps between them are of the correct length. Refit the keyboard and secure it with its screws.

(b) Single-Current Operation

Check

83.15 Connect any type of continuity tester across the Stop contacts (nearest the rear) and turn the machine slowly by hand until the contacts just close.

83.16 Position the timing disc, Fig.4.66, so that the beginning of the Stop signal is in line with the left-hand edge of the slot in the keyboard fixing screw, i.e. datum line 'X', as shown in the figure.

83.17 Continue to turn the machine slowly by hand and check that the Stop contacts open when the end of the signal is in line with datum line 'X'.

Action

83.18 If this is not so, adjust the signal length by means of the Stop contact screw, Fig.4.65.

Check

83.19 Return the machine to the rest position and again set up the Letters code (MMMMM) on the pins. Transfer the continuity tester to the Start contacts (2nd from the rear). Turn the machine slowly by hand until the Start contacts just close, and position the timing disc, Fig.4.66, so that the beginning of the Start signal is in line with the datum line 'X'.

83.20 Continue to turn the machine slowly by hand and check that the Start contacts open when the end of the signal is approximately .030 in. past the datum line 'X'. This corresponds to a signal overlap of approximately 1 - 2%.

Action

83.21 If this is not so, adjust the signal length by means of the Start contact screw, Fig.4.65.

Check

83.22 Return the machine to the rest position, set up the Letters code (MMMMM) on the pins again and repeat Checks 83.15 and 83.16.

83.23 Transfer the continuity tester to the Start contacts. Continue to turn the machine slowly by hand and check that the Start contacts close as the beginning of the Start signal comes into line with the datum line 'X'.

Action

83.24 If this is not so, correct the position of the signal by adjusting the Start transmitter lever, Fig.4.65, using the following procedure.

★ The cam followers are adjusted in the factory and should not require re-adjustment unless the translator cam pack has been disturbed.

(a) Turn the translator camshaft by hand until the transmitter lever to be adjusted is as shown in Fig.4.67. This figure indicates for each transmitter lever, Fig.4.65, the point in the translator camshaft revolution where the respective cam follower associated with that lever is not in contact with its cam, and thus the lever will be in a position in which it can safely be adjusted.

(b) Slacken the screw securing the transmitter lever eccentric and, holding down the transmitter lever and the cam follower, insert a screwdriver between the adjustment teeth and reposition the eccentric. To advance the signal, the eccentric should be raised. Tighten the eccentric securing screw.

(c) Check the position of the signal by repeating Checks 83.22 and 83.23 and, if necessary, refine (a) and (b) above until the position is correct.

83.25 Adjust the length of No.1 element and position it with respect to the Start signal. Repeat this procedure with each signal element in turn until all the elements are correctly positioned and are of the correct length. Refit the keyboard and secure it with its fixing screws.

## 84. LAG WEIGHT TRANSIT TIMING

★ The anchor of the lag weight spring is on the tail of the speed-change lever, Fig.4.68. On dual-speed machines the lag weight transit timing, and thus the length of the Stop signal, should be set to suit the required speed of operation by positioning the speed-change lever against one of its two stop screws. The positions of the stop screws are set in the factory and will not normally require attention. If, however, a new lag weight spring is fitted at any time it may be necessary to reposition the stop screws by carrying out the following procedure.

Check

84.1 Switch on the motor and check its speed as recommended in Adjustment No.81.

84.2 On dual-speed machines, refer to Part 2, page 10 and check that the correct set of gears is engaged.

84.3 Check that the speed-change lever is abutting against its appropriate stop screw for the required speed of operation, i.e.

(a) For 45/50 baud operation, as shown in Fig.4.68(a).

(b) For 75 baud operation, as shown in Fig.4.68(b).

84.4 Ensure that the feed change lever, Fig.4.37, is in the single feed position, i.e. towards the rear of the machine. Move the pressure roller release lever towards the rear of the machine so that the paper will not feed. Mark a pencil line on the platen knob boss and a corresponding mark on the platen unit end-plate.

84.5 Switch on the motor, run out Line Feed from the keyboard and check that the number of revolutions the platen makes over a period of one minute is as follows.

(a) On 45 baud operation - 12.1/6 revolutions.

(b) On 50 baud operation - 13.1/3 revolutions.

(c) On 75 baud operation - 20 revolutions.

Action

84.6 If the correct number of revolutions is not obtained, move the speed-change lever, Fig.4.68, towards the front of the machine so that it is freed from its

stop screws. On single-speed machines, it may also be necessary to slacken the locking screw located in the bottom slot in the translator unit rear frame, and move the screw to one side so that the speed-change lever can be freely adjusted.

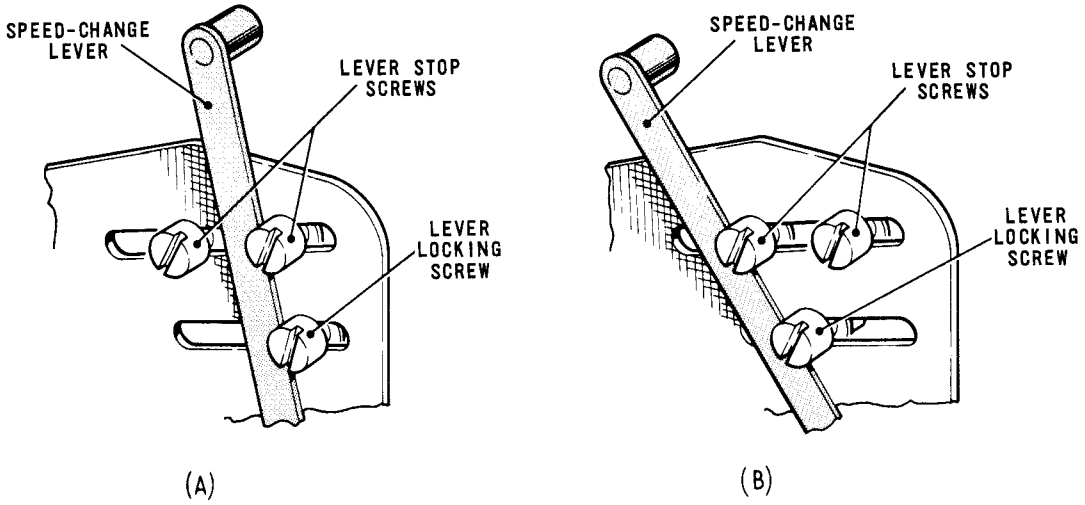


Fig. 4.68 SPEED-CHANGE LEVER POSITIONS

Check

84.7 Move the speed-change lever slightly and repeat Check 84.5. Check whether it is now possible to approach the correct figure more closely without causing the translator clutch to cease tripping the machine.

84.8 If improvement appears to be possible, hold the speed-change lever in its new position and allow the machine to shut down under the action of the starter switch mechanism. Depress any key on the keyboard (except Run Out) and check that the translator clutch abutment lifts and the motor starts up.

84.9 On dual-speed machines, repeat the above procedure with the machine set to operate at its alternate speed.

Action

84.10 Refine the position of the speed-change lever until all the above conditions are satisfied, and then secure the lever in its new position with its stop screws. On single-speed machines, return the locking screw to its position at the right-hand side of the lever.

84.11 Restore the pressure roller release lever towards the front of the machine so that the paper will again feed.

## 85. TYPEHEAD HEIGHT - FINAL SETTING

Check

85.1 Print a line consisting of all the characters on the top layer of the typehead, then print alongside a line consisting of all the characters on the second layer of the typehead and a further line of top layer characters. Using the top layer as a reference, check that the second layer is at the correct height. Check also that the upper and lower legs of the characters are of equal density.

85.2 Repeat this procedure with the third and bottom layers in turn, using the top layer as the reference level each time.

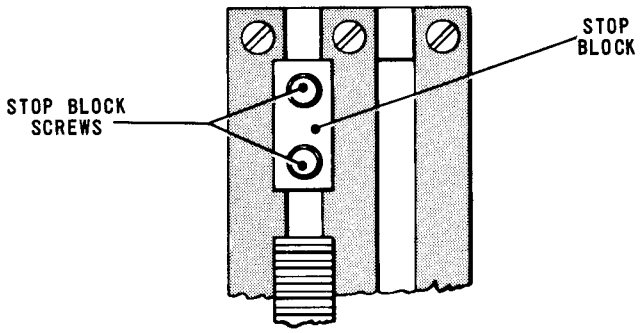


Fig. 4.69 TYPEHEAD LIFT RACK AND STOP BLOCK

Action

85.3 If necessary, refine Adjustment Nos. 59 and 64. If the bottom layer is high with respect to the reference level, slacken the screws securing the stop block, Fig. 4.69, and move the block towards the typehead lift rack until the correct height is obtained. Tighten the stop block screws.

## 86. CARRIAGE RETURN BUTTON

Check

86.1 Slide the typehead to its extreme right-hand position and refit the machine cover. Operate the carriage return button and check that this action causes the typehead to be returned smoothly to its extreme left-hand position.

Action

86.2 If this is not so, slacken the screw securing the carriage return manual lever, Fig. 4.70, and reposition the lever with respect to the splined shaft. Tighten the screw.

## 87. DASHPOT - DYNAMIC CHECK

Check

87.1 Transmit into the machine if possible from an automatic transmitter (tape reader), a test message consisting of lines of varying lengths, each line terminating with the code combinations for Carriage Return (SSSMS), Line Feed (SMSSS) and Letters (MMMMM). Paying particular attention to the short lines, check that the typehead comes to rest with a minimum of impact and in time to commence the next line.

Action

87.2 If this is not so, refine the adjustment of the dashpot air vent screw, Fig. 4.46, until the correct condition is obtained for all lengths of line.

## 88. LINE LENGTH OPERATING STOP

★ The printing line length can be adjusted between 69 and 74 characters depending on the width of the left-hand margin and the position of the line length operating stop, Fig. 4.70, at the right-hand end of the typehead carriage unit. The adjustment of the left-hand margin is given in Adjustment No. 49 on page 38. The following instruction is concerned only with the position of the line length operating stop.

Check

88.1 Run out a complete line of characters and check that the printing line is the required length.

88.2 Slide the typehead to the right so that it is opposite the last character but one, e.g. for a 70-character line, position the typehead opposite the 69th character.

88.3 Depress any printing key or, if the machine has no keyboard, set up any printing combination on the pins. Lift the translator clutch abutment and turn the machine by hand until the printing action has taken place. Check that the retention pawl, Fig.4.35, is now lifted clear of the retention rack and that there is a clearance of approximately .030 in. (dimension 'ar') between the tail of the retention pawl and the top of the retention rack teeth.

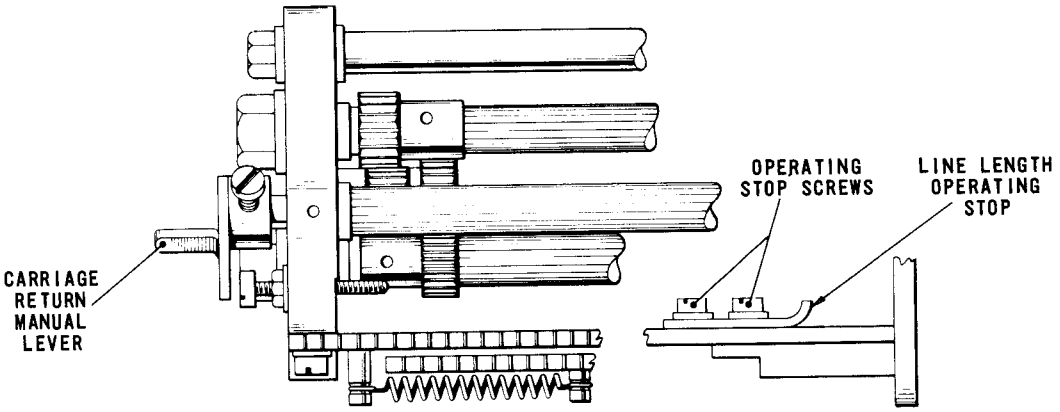


Fig. 4.70 TYPEHEAD CARRIAGE—PLAN VIEW

Action

88.4 To adjust, return the machine to the rest position and operate the carriage return manual lever, Fig.4.70, so that the typehead carriage is returned to its extreme left-hand position. Slacken the screws securing the line length operating stop until friction tight and move the stop to the right as far as it will go.

88.5 Repeat Checks 88.2 and 88.3, and lever the operating stop to the left with a screwdriver until dimension 'ar' is satisfied. Operate the carriage return manual lever again so that the typehead carriage is returned to its extreme left-hand position and tighten the screws securing the operating stop.

## 89. STARTER SWITCH TIMING

Check

89.1 Check that the holdout release bracket on the switch operating link, Fig.4.71, is in the correct position for the operating speed of the machine, i.e. fully raised for 50 baud or fully lowered for 75 baud operation.

Action

89.2 If this is not so, slacken the screws securing the holdout release bracket and raise or lower the bracket as necessary. Tighten the bracket screws.

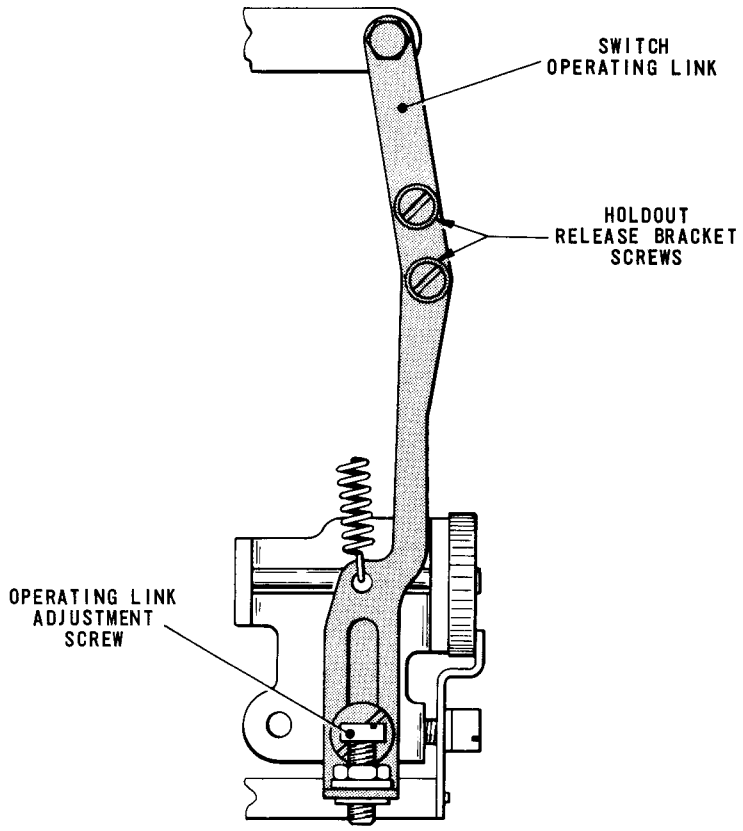


Fig. 4.71 STARTER SWITCH TIMING MECHANISM

Check

89.3 Switch on the motor and move the electromagnet armature to its marking stop. Check that the time between the full engagement of the starter arm pin, Fig. 4.61, with the worm wheel and the motor switching off is within the limits of 60 - 70 seconds.

Action

89.4 If this is not so, slacken the locknut of the operating link adjustment screw, Fig. 4.71, and adjust the screw until the required condition is satisfied. Tighten the adjustment screw locknut.

## 90. BELL AND WRU? CONTACTS

Check

90.1 Check that the Bell contact peg, Fig. 4.72, is engaged with the projection on Bell switch arm by .015 - .030 in. (dimension) 'bj' - inset).

90.2 Repeat Check 90.1 with respect to the WRU? contact peg.

Action

90.3 To adjust, slacken the screws clamping the appropriate contact spring assembly and swing the assembly until dimension 'bj' is achieved. Tighten the assembly screws.

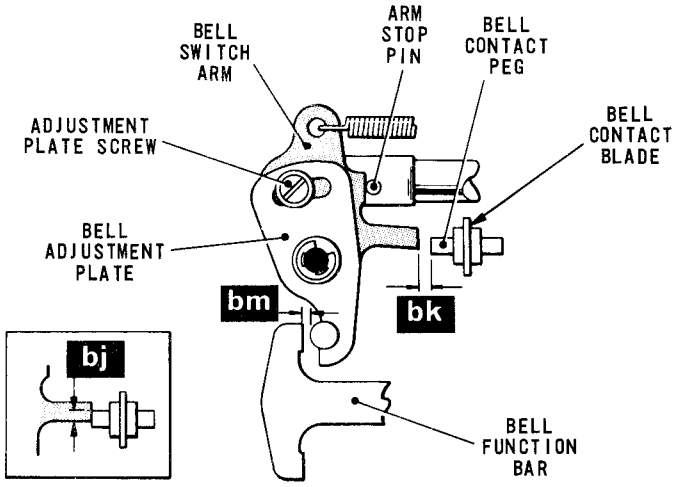


Fig. 4.72 BELL CONTACT OPERATING MECHANISM

Check

90.4 Check that a force of 5½ - 7 ounces (156 - 198 grammes) applied to the tip of the Bell contact blade causes its peg to be moved clear of the projection on the Bell switch arm.

90.5 Repeat Check 90.4 with respect to the WRU? contact blade.

Action

90.6 To adjust, set the appropriate contact blade until the correct tension is present.

Check

90.7 Move the shift lever, Fig.4.53, to the Letters position, i.e. to the left looking from the rear of the machine. Lift the translator clutch abutment and turn the machine by hand until the function reset bar, Fig.4.73, has moved towards the rear of the machine.

90.8 With the Bell switch arm, Fig.4.72, resting against its stop pin, check that there is now a clearance of .004 - .008 in. (dimension 'bk') between the projection on the switch arm and the Bell contact peg.

90.9 Repeat Check 90.8 with respect to the WRU? switch arm.

Action

90.10 To adjust, slacken the nut securing the contact reset arm, Fig.4.73, and move the arm until the correct clearance is present on both switches.

Check

90.11 Return the machine to the rest position and, with the Bell contact peg, Fig.4.72, engaged with the projection on the Bell switch arm, check that the Bell alarm circuit blade, Fig.4.74, is now resting against its buffer spring and that there is a clearance of .015 - .025 in. (dimension 'bl') between the alarm circuit blade and the Bell contact blade. Check also that a force of 1 - 1½ ounces (28 - 43 grammes) applied to the tip of the alarm circuit blade causes its hook to be moved clear of the buffer spring.

90.12 Repeat Check 90.11 with respect to the WRU? contact spring assembly.

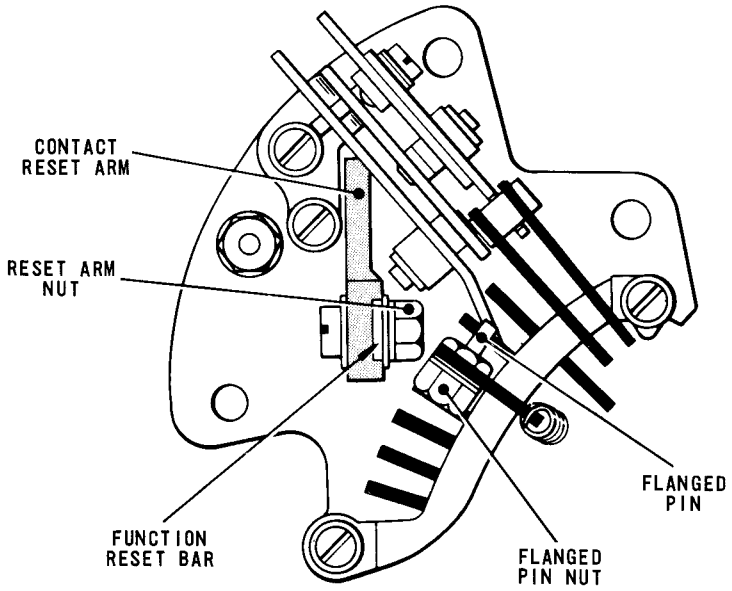


Fig. 4.73 BELL AND WRU? FUNCTION BARS

Action

90.13 To adjust, carry out the following procedure.

(a) Set the alarm circuit blade until its hook is in contact with the buffer spring.

(b) Set the buffer spring until dimension 'bl' is obtained.

(c) Re-adjust the alarm circuit blade until the correct spring pressure is present.

(d) Re-check dimension 'bl' and, if necessary, re-adjust the buffer spring.

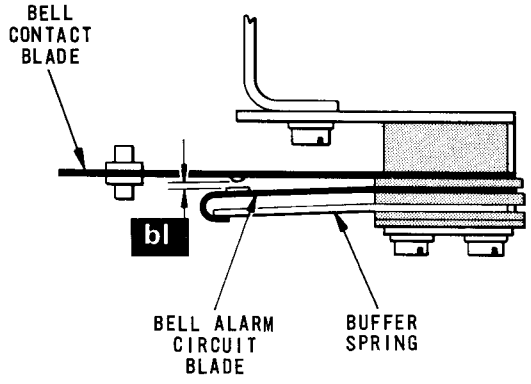


Fig. 4.74 BELL CONTACT SPRING ASSEMBLY

Check

90.14 Depress the Bell key or, if the machine has no keyboard set up the Bell code (MMSMS) on the pins. Lift the translator clutch abutment and turn the machine

by hand until the function reset bar, Fig.4.73, has moved towards the rear of the machine. Check that the rear end of the Bell function bar, Fig.4.72, is abutting against the shift lever, Fig.4.53, and the front end of the bar is clear of the Bell adjustment plate Fig.4.72, by .004 - .008 in. (dimension 'bm').

Action

90.15 To adjust, slacken the screw securing the adjustment plate and move the plate until dimension 'bm' is achieved. Tighten the adjustment plate screw.

Check

90.16 Return the machine to the rest position. Depress the WRU? key or, if the machine has no keyboard, set up the WRU? code (MSSMS) on the pins. Lift the translator clutch abutment and turn the machine by hand until the function reset bar, Fig.4.73, has moved towards the rear of the machine. Check that the rear end of the WRU? function bar is abutting against the shift lever, Fig.4.53, and the flanged pin on the front end of the bar is clear of the WRU? switch arm by .004 - .008 in. (dimension 'bm', Fig.4.72).

Action

90.17 To adjust, slacken the nut securing the flanged pin, Fig.4.73, and move the pin until the correct dimension is achieved. Tighten the nut.

Check

90.18 Move the shift change lever, Fig.4.53, to the Figures position. Depress the Bell key or, if the machine has no keyboard, set up the Bell code (MMSMS) on the pins. Lift the translator clutch abutment, turn the machine slowly by hand and check that, as the function reset bar, Fig.4.73, is returned towards the front of the machine, the projection on the Bell switch arm, Fig.4.72, is lowered on to the top of the Bell contact blade peg and the contacts are permitted to close.

90.19 With the contacts thus closed, lift the projection on the switch arm clear of the contact blade peg and check that the hook of the Bell alarm circuit blade Fig.4.74, is now clear of its buffer spring by a minimum of .003 in.

90.20 Return the machine to the rest position and repeat Checks 90.18 and 90.19 with respect to the WRU? contacts, this time setting up the WRU? code (MSSMS).

Action

90.21 If Check 90.18 is not satisfied, refine the setting of dimensions 'bj', 'bk' and 'bl'. If Check 90.19 is not satisfied, repeat Check 90.4 or 90.5 and, if necessary, Adjustment 90.6.

## 91. OPERATION COUNTER

Check

91.1 With the machine in the rest position, check that the feed pawl, Fig.4.75, is fully engaged with a tooth of the ratchet wheel, and that there is a clearance of approximately .010 in. (dimension 'bn') between the top face of the retention pawl and the face of the next tooth in the ratchet wheel.

91.2 Lift the translator clutch abutment, turn the machine slowly by hand and check that, as the ratchet wheel is rotated by the feed pawl, the retention pawl drops into its next tooth.

91.3 Continue to turn the machine and check that the feed pawl engages its next tooth before the machine reaches its rest position.

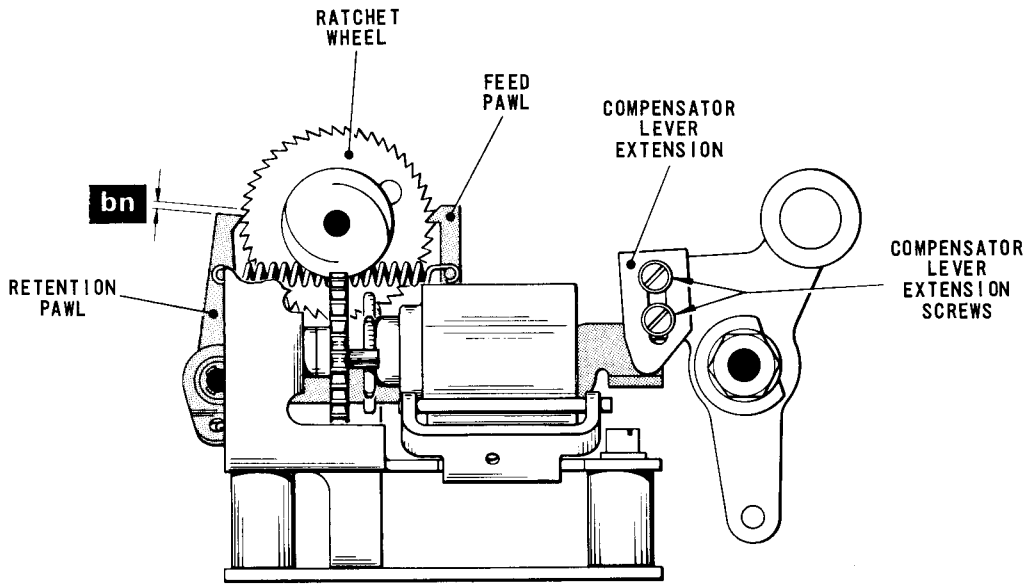


Fig. 4.75 OPERATION COUNTER

Action

91.4 To adjust, slacken the screws securing the compensator lever extension and move the extension until the above conditions are satisfied. Tighten the screws.

# SECTION 5

## A. REPERFORATING ATTACHMENT

### 92. SELECTOR BAR/PUNCH - VERTICAL CLEARANCE

Check

92.1 With the punches, Fig.4.76, withdrawn to their fullest extent from the punch block, check that the vertical clearance between the two outer punches and their respective selector bars is approximately equal.

Action

92.2 If this is not so, slacken the screws securing the guide rack, Fig.4.78, and adjust the rack until the condition is satisfied. Tighten the rack screws.

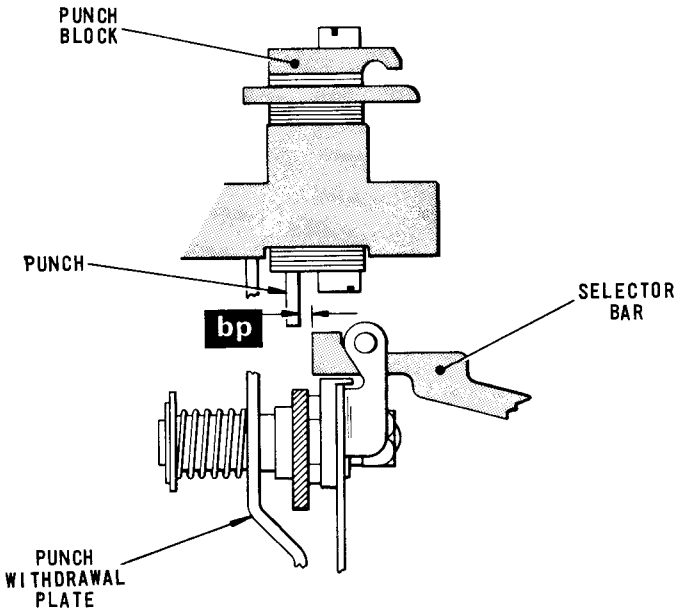


Fig. 4.76 SELECTOR BAR/PUNCH MECHANISM

### 93. SELECTOR BAR/PUNCH - HORIZONTAL CLEARANCE

Check

93.1 With the machine in the rest condition and the All Space code (SSSSS) set up on the pins, check that there is a horizontal clearance of .020 - .025 in. (dimension 'bp') between each punch, Fig.4.76, and its respective selector bar.

Action

93.2 To adjust, slacken the screw securing the appropriate push rod, Fig.4.77, to its adjustment plate and, holding down the respective selector code plate, insert a screwdriver between the adjustment teeth and move the adjustment plate until dimension 'bp' is obtained. Tighten the push rod screw.

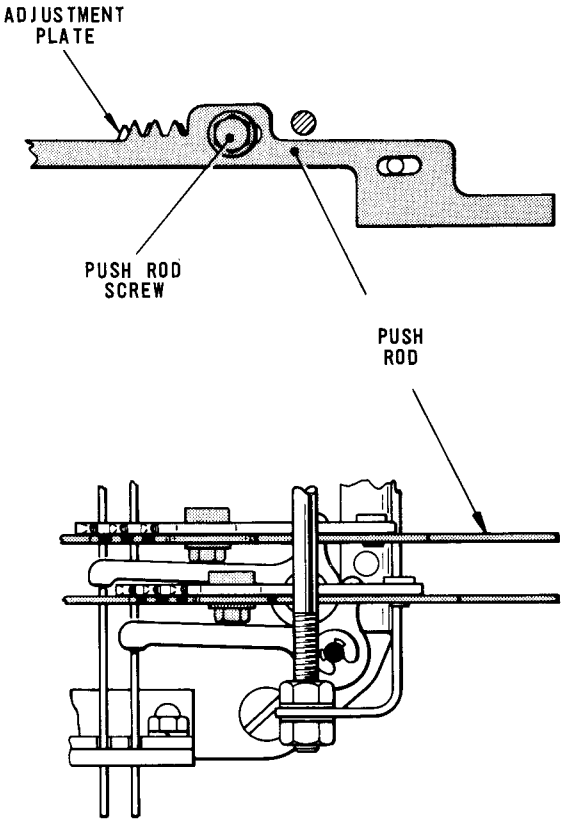


Fig. 4.77 SELECTOR BAR/PUSH ROD LINKAGE

## 94. PUNCH WITHDRAWAL PLATE

Check

94.1 Depress the Letters key or, if the machine has no keyboard, set up the Letters code (MMMMM) on the pins. Lift the translator clutch abutment and turn the machine by hand until the punching operation has taken place. Continue to turn the machine and check that the punch withdrawal plate, Fig.4.76, withdraws each punch to its fullest extent from the punch block.

94.2 Return the machine to the rest position and check that it is now possible to move each punch upwards by a small amount. This is to ensure that none of the punches is jammed down by the punch withdrawal plate when the machine is in the rest position.

Action

94.3 With the machine in the rest position, adjust the punching arm adjustment screw, Fig.4.78, until the screw just touches the underside of the punching arm. Tighten the screw a further 1/4 of a turn and clamp it in this position with its locknut.

## 95. FEED HOLE PITCH - INITIAL SETTING

Check

95.1 With the machine in the rest condition, check that the ratchet wheel, Fig.4.79, is so positioned that the engagement face of one of its teeth is in the horizontal plane, as shown in inset 1.

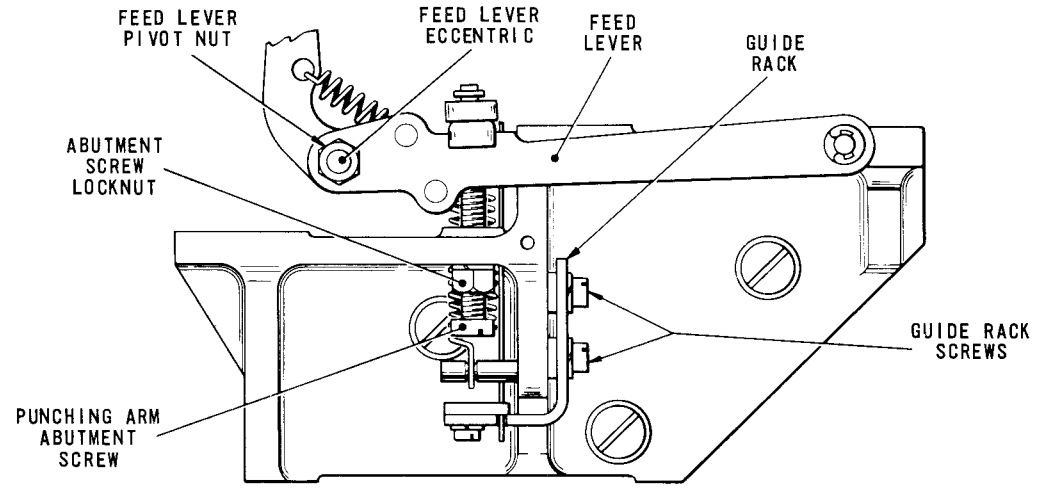


Fig. 4.78 FEED LEVER MECHANISM

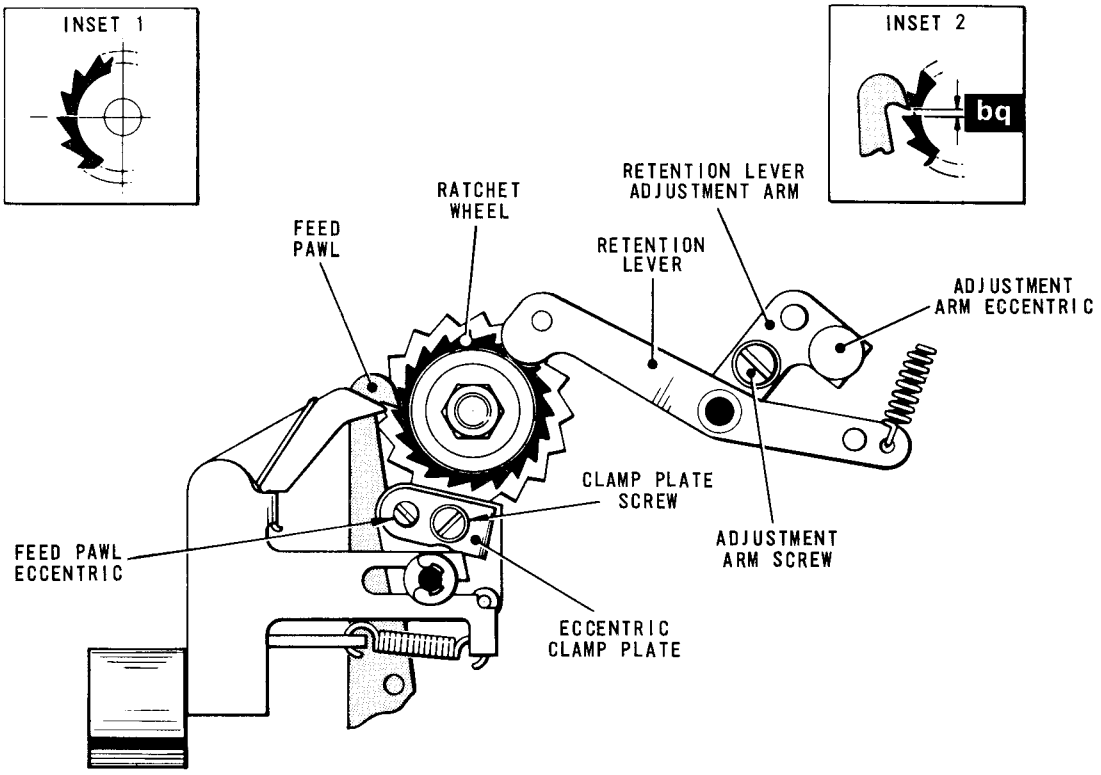


Fig. 4.79 TAPE FEED MECHANISM

Action

95.2 If this is not so, slacken the screw securing the retention lever adjustment arm and turn the arm eccentric until the correct ratchet wheel position is achieved. Tighten the adjustment arm screw.

## 96. FEED PAWL HEIGHT

Check

96.1 With the machine in the rest condition, check that there is an estimated clearance of .020 in. (dimension 'bq' - inset 2) between the operating face of the feed pawl, Fig.4.79, and the nearest tooth of the ratchet wheel.

Action

96.2 To adjust, slacken the feed lever pivot nut, Fig.4.78, and turn the feed lever eccentric until the correct clearance is obtained. Tighten the pivot nut.

## 97. FEED PAWL ENGAGEMENT

Check

97.1 Operate the feed pawl, Fig.4.79, by hand and check that on its downward movement the pawl engages one tooth only of the ratchet wheel.

Action

97.2 To adjust, slacken the screw securing the eccentric clamp plate and turn the feed pawl eccentric until the condition is satisfied. Tighten the clamp plate screw.

## 98. REPERFORATOR CONTROL KNOB

Check

98.1 Push the reperforator control knob, Fig.4.80, inwards to the OFF position, Check that this action disengages the interposer from the driving plate.

Action

98.2 If this is not so, slacken the locknut of the control rod adjustment nut and turn the adjustment nut until the condition is satisfied. Clamp the adjustment nut with its locknut.

## 99. REPERFORATOR CONTROL LEVER STOP SCREW

Check

99.1 Pull the reperforator control knob, Fig.4.80, outwards to the ON position. Check that there is now a clearance of .005 - .020 in. (dimension 'br') between the control rod domed adjustment nut and the reperforator control lever.

Action

99.2 If this is not so, slacken the locknut of the control lever stop screw and adjust the stop screw until dimension 'br' is obtained. Clamp the stop screw with its locknut.

## 100. REPERFORATOR SUPPRESSION FROM BELL AND WRU?

Check

100.1 With the machine in the rest condition, check that the tails of the Bell and WRU? function bars, Fig.4.81, are approximately equidistant from the operating pin of the throwout lever.

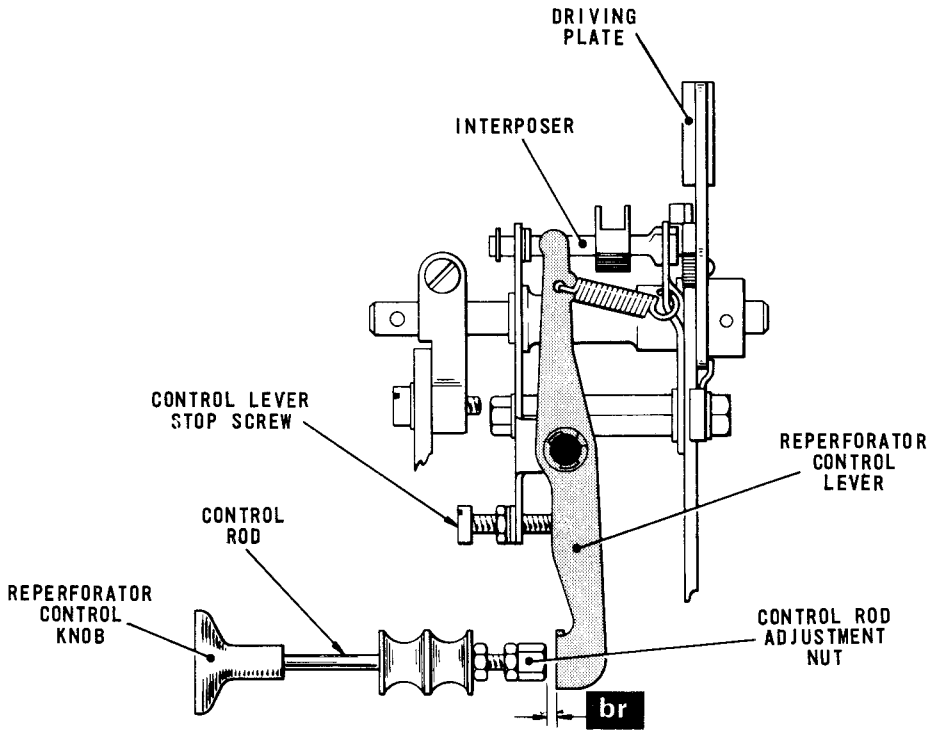


Fig. 4.80 REPERFORATOR ON/OFF CONTROL LINKAGE

Action

100.2 To adjust, set the upper part of the throwout lever.

Check

100.3 Move the shift lever, Fig.4.53, to the Figures position. Depress the Bell key or, if the machine has no keyboard, set up the Bell code (MMSMS) on the pins, Lift the translator clutch abutment and turn the machine by hand until the Bell function bar, Fig.4.81, has moved towards the rear of the machine. Check that this movement of the function bar disengages the interposer, Fig.4.80, from the driving plate.

100.4 Return the machine to the rest position and repeat Check 100.3 with respect to the WRU? function bar, this time setting up the WRU? code (MSSMS).

Action

100.5 To adjust, slacken the nut securing the throwout lever flanged pin, Fig.4.81, and reposition the pin until the condition is satisfied. Hold the pin in its new position and tighten its securing nut.

## 101. THROWOUT LEVER RESET CHOPPER

Check

101.1 Push the reperforator control knob, Fig.4.80, inwards so that the interposer is disengaged from the driving plate. Lift the translator clutch abutment and turn the machine by hand until the function bars have moved towards the rear of the machine. Check that there is now an estimated clearance of .005 in. (dimension 'bs' - inset) between the tail of the throwout lever, Fig.4.81, and the operating face of the chopper lever.

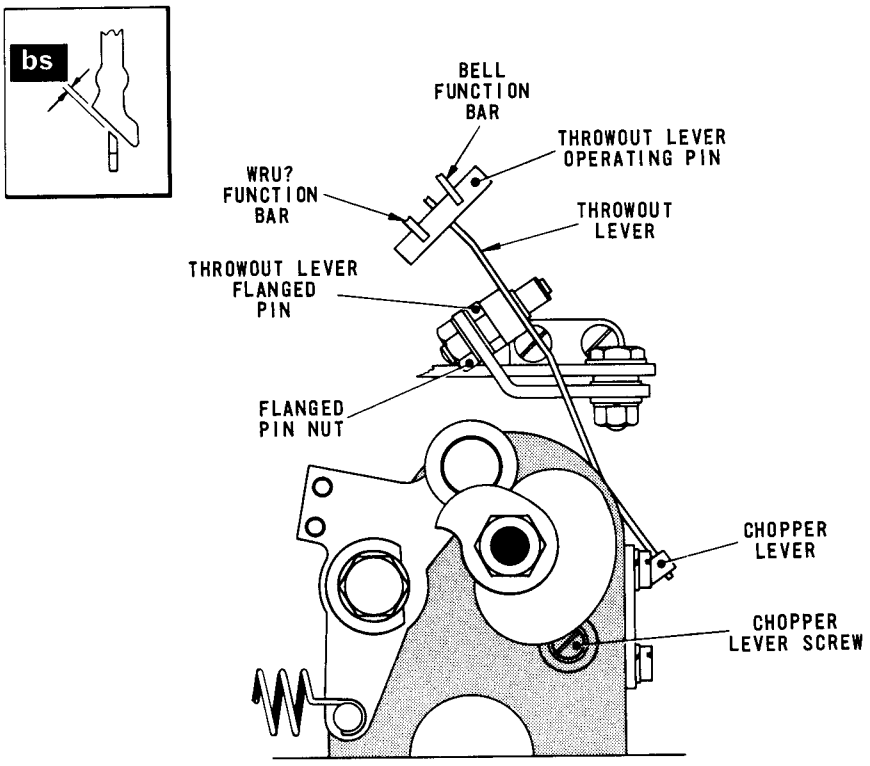


Fig. 4.81 THROWOUT LEVER MECHANISM

Action

101.2 If this is not so slacken the screw securing the chopper lever until it is friction tight and, holding the cam follower part of the chopper lever against its cam, position the tail of the lever so that dimension 'bs' is set up. Tighten the screw.

## 102. TAPE FEED LATCH

Check

102.1 Check that the slot between the tines of the tape guide, Fig.4.82, is centrally disposed about the teeth of the feed wheel.

102.2 Insert a length of tape perforated with feed holes into the reperforator and check, by carrying out the following procedure, that the tips of the tines are just touching the tape.

(a) Lift the retention lever, Fig.4.79, out of engagement with the extention wheel.

(b) Lift the tape guide, Fig.4.82, and turn the feed wheel knob, noting the force required to do so.

(c) Lower the guide on to the tape and turn the feed wheel knob again. Check that there is no discernible difference in the force required to turn the knob. Check also that there is no visible gap between the tips of the tines and the tape.

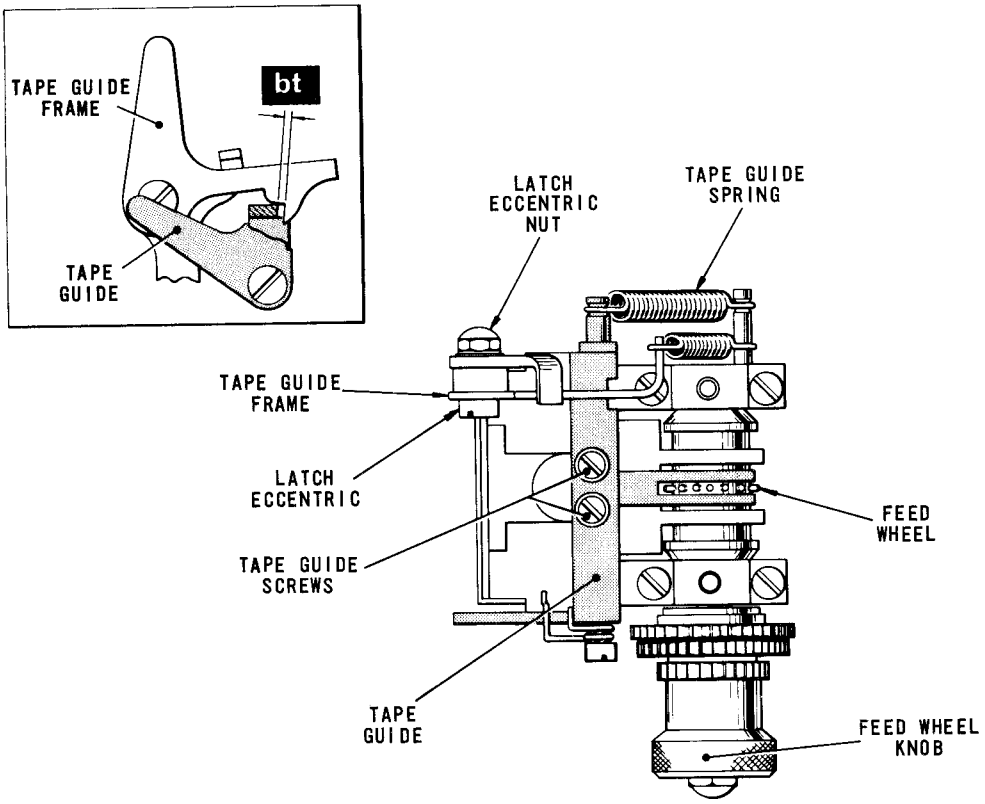


Fig. 4.82 TAPE GUIDE AND LATCH MECHANISM

Action

102.3 If either of these checks is not satisfied, remove the tape guide spring, slacken the domed nut securing the latch eccentric and turn the eccentric until there is a clearance (dimension 'bt' - inset) between the hook on the latch and the tape guide frame.

102.4 Slacken the screws securing the tape guide to the tape guide frame and, pressing the tape lightly on to the rollers by means of the tape guide, slide the guide backwards and forwards until its curved underside is positioned concentrically with the rollers, ensuring that the slot in the guide remains centrally disposed about the teeth of the feed wheel. Tighten the tape guide screws.

102.5 Refit the tape guide spring. Insert two thicknesses of tape perforated with feed holes into the reperforator. Adjust the latch eccentric until, with the tape guide resting on the tape, the hook on the latch is just touching the engagement face of the tape guide frame, i.e. dimension 'bt' is no longer present. Clamp the eccentric with its locknut.

102.6 Remove one thickness of tape. Slacken the tape guide screws again and move the guide towards the guide frame until the tips of the tines on the guide just touch the tape. Ensure that the slot in the guide is still centrally disposed about the teeth of the feed wheel and tighten the tape guide screws.

## 103. FEED HOLE PITCH - FINAL SETTING

Check

103.1 Insert a length of tape perforated with feed holes into the reperforator and check with a tape pitch gauge TA1385 that the pitch of the feed holes is either constant, or increases or decreases regularly so that the total change of pitch is not more than half a feed hole pitch in ten inches of tape.

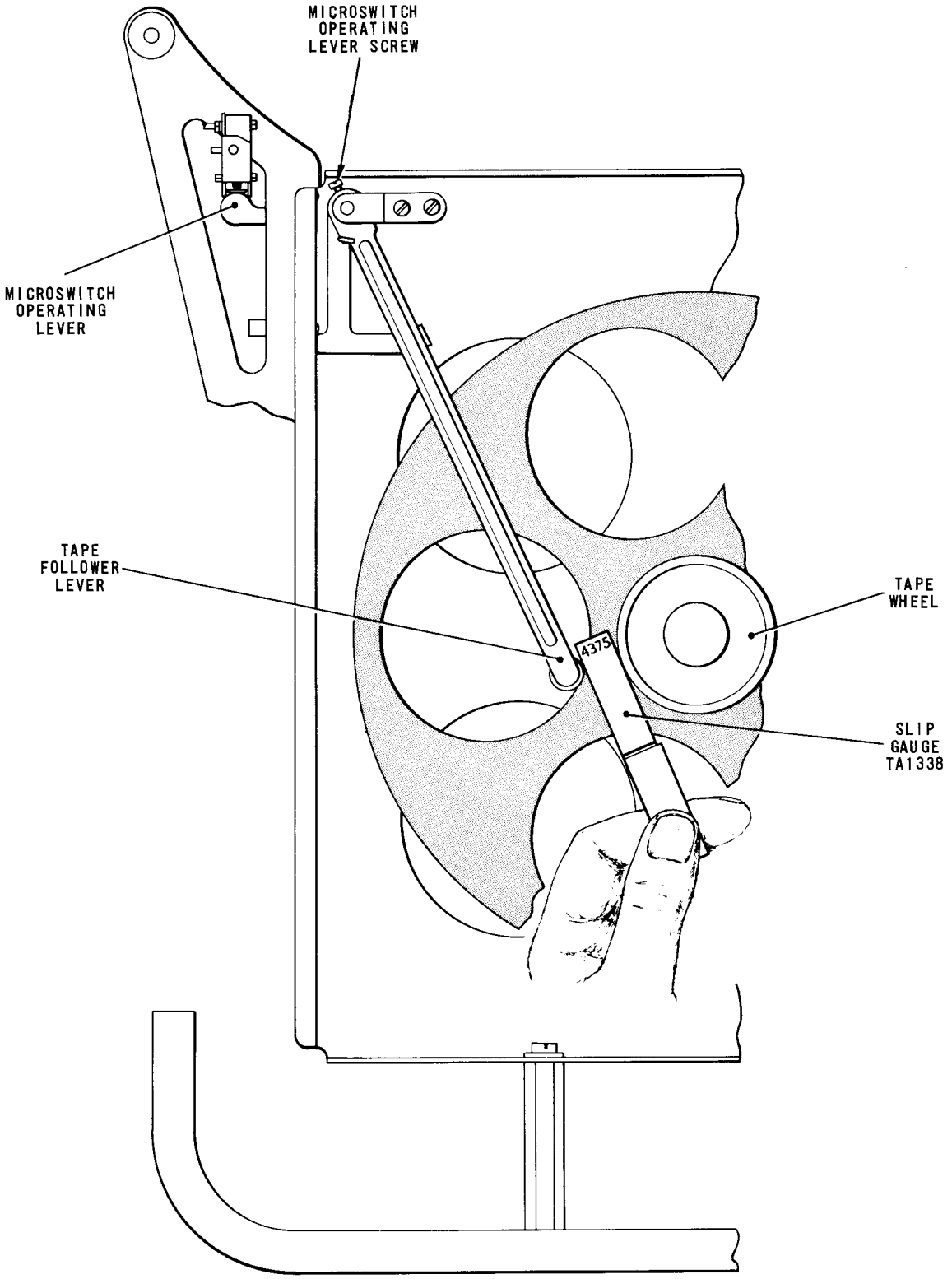


Fig. 4.83 TAPE EXHAUST ALARM

Action

103.2 If the feed hole pitch is irregular, refine Adjustments 102.3 to 102.6.

103.3 If the feed hole pitch varies regularly, but the cumulative variation over ten inches is more than half a feed hole pitch, refine Adjustment 95.2. Repeat Instruction Nos.96 and 97 and, if necessary, refine these adjustments.

103.4 Repeat Check 103.1 and, if necessary, refine Adjustment 103.3 until the feed hole pitch is correct.

## 104. TAPE EXHAUST ALARM

Check

104.1 Turn the machine on to its right-hand side, open the tape drawer and remove the cardboard tape boss from the tape wheel, Fig.4.83. Insert the 0.4375 in. end of slip gauge TA1338 between the roller on the tape follower lever and the tape wheel, as shown in the figure.

104.2 Switch on the motor and, holding the slip gauge carefully so that it is not dislodged, close the tape drawer. Operate the tape follower lever and check that the end-of-line indicator lamp lights as the roller on the lever comes into contact with the slip gauge. If no adjustment is required, remove the gauge.

Action

104.3 To adjust, slacken the screw securing the microswitch operating lever until it is friction tight and reposition the lever until the condition is satisfied. Tighten the screw and remove the slip gauge.

# B. ANSWER-BACK UNIT

## 105. KEYBOARD SUPPRESSION

Check

105.1 Release the answer-back unit and feed the ward drum round for one or two wards. Check that there is now a horizontal clearance of .010 - .015 in. (dimension 'bu') between the push rod suppressor, Fig.4.84, and each push rod.

Action

105.2 To adjust, slacken the three screws securing the unit and move the unit until the required clearance is obtained. Tighten the unit securing screws.

Check

105.3 With the answer-back unit set up as in Check 105.1, check that the push rods have approximately .030 - .035 in. (dimension 'bv') vertical free movement.

Action

105.4 If this is not so, slacken the nut securing the suppressor link and adjust the link until the required free movement is obtained. Tighten the nut.

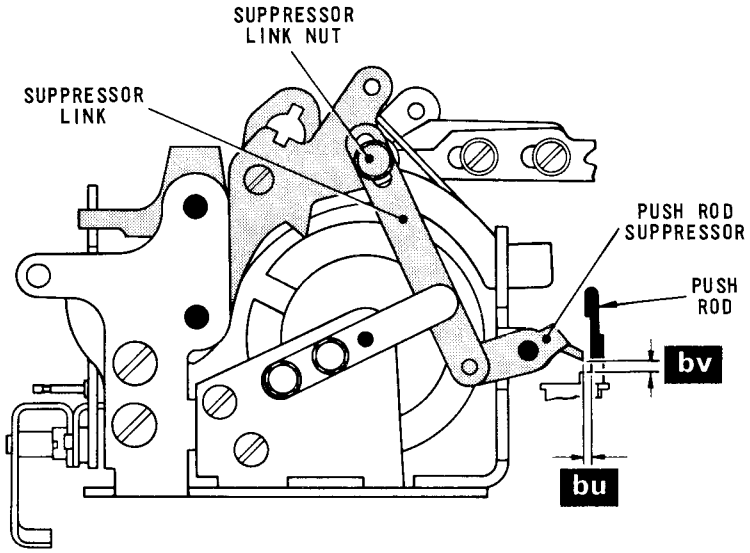


Fig. 4.84 PUSH ROD SUPPRESSOR/PUSH ROD CLEARANCES

106. TRIP FROM KEYBOARD

Check

106.1 Depress the 'Here Is' key. Check that the release lever, Fig.4.86, is engaged on the top step of the release lever latch, and that the release lever trip arm, Fig.4.85, is now pulled .050 - .090 in. (dimension 'bw') below the top surface of the release lever tail.

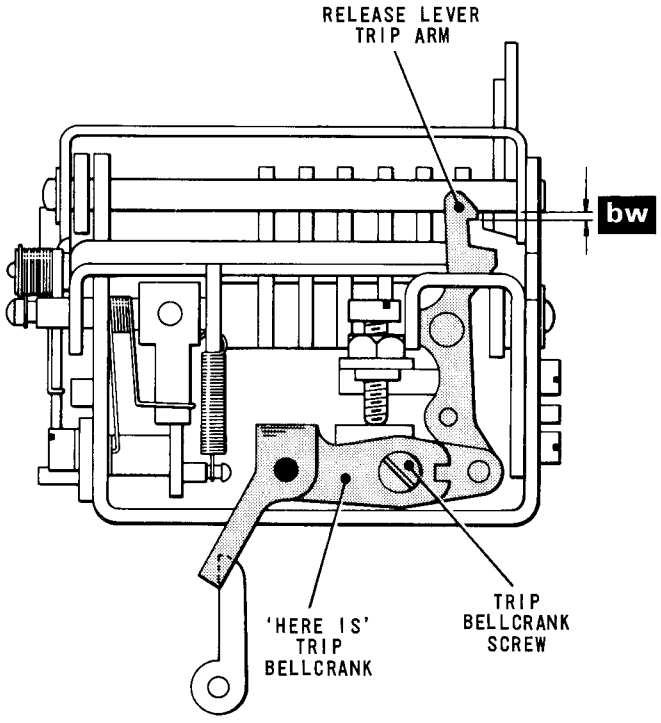


Fig. 4.85 ANSWER-BACK TRIP MECHANISM

Action

106.2 To adjust, slacken the screw securing the 'Here Is' trip bellcrank and move the bellcrank until dimension 'bw' is satisfied. Tighten the screw.

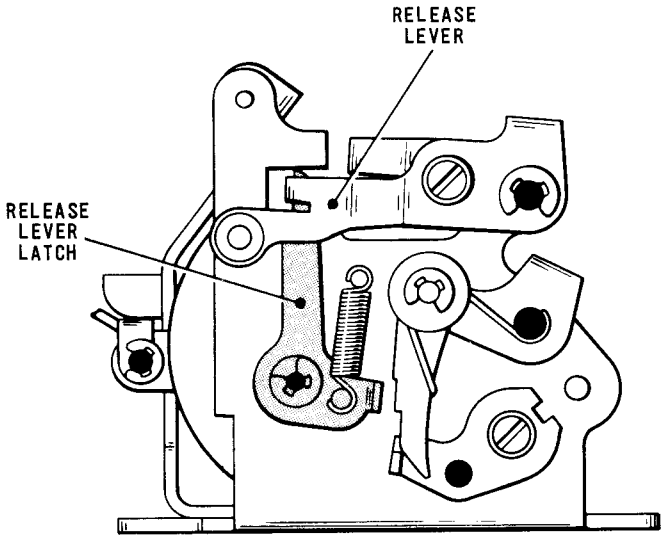


Fig. 4.86 ANSWER-BACK UNIT—REAR VIEW

†107. VERTICAL TRIP LINK

Check

107.1 With the machine in the rest condition, check that there is a clearance of .005 – .015 in. (dimension 'bx') between the block on the vertical trip link, Fig. 4.87, and the transfer lever.

Action

107.2 To adjust, remove the operation counter, slacken the screws securing the vertical trip link bracket and move the bracket up or down until dimension 'bx' is obtained. Tighten the bracket screws and refit the operation counter.

108. TRIP FROM FUNCTION BAR

Check

108.1 Move the shift lever, Fig. 4.53, to the Figures position. Set up the WRU? code (MSSMS) on the pins. Lift the translator clutch abutment and turn the machine by hand until the WRU? function bar, Fig. 4.88, has moved towards the rear of the machine. Check that the release lever, Fig. 4.86, is engaged on the top step of the release lever latch but is not restricting the full movement of the function bar.

108.2 Return the machine to the rest position and move the shift lever, Fig. 4.53, to the Letters position. Depress the letter 'D' key or, if the machine has no keyboard, set up the letter 'D' code (MSSMS) on the pins. Lift the translator clutch abutment and turn the machine by hand until the function bars move towards the rear of the machine. Check that the projection on the WRU? function bar, Fig. 4.88, is now clear of the trip arm by a minimum of .003 in. (dimension 'by').

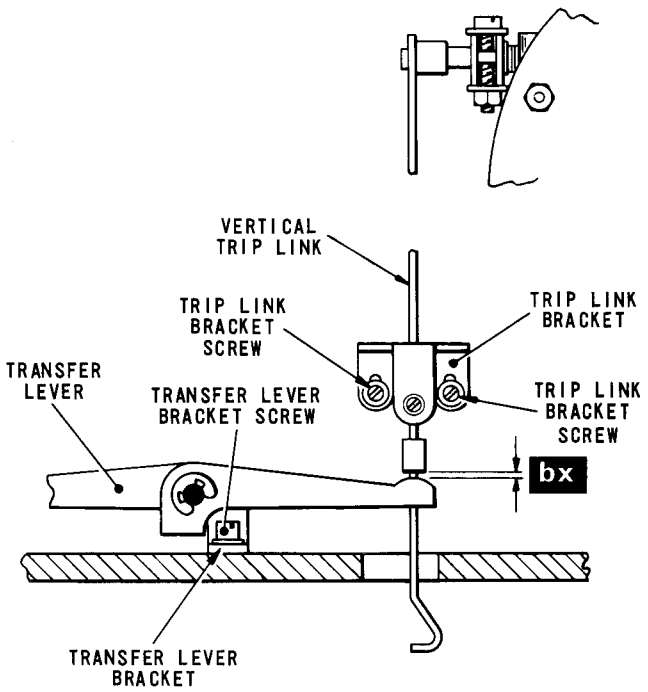


Fig. 4.87 VERTICAL TRIP LINK/TRANSFER LEVER CLEARANCE

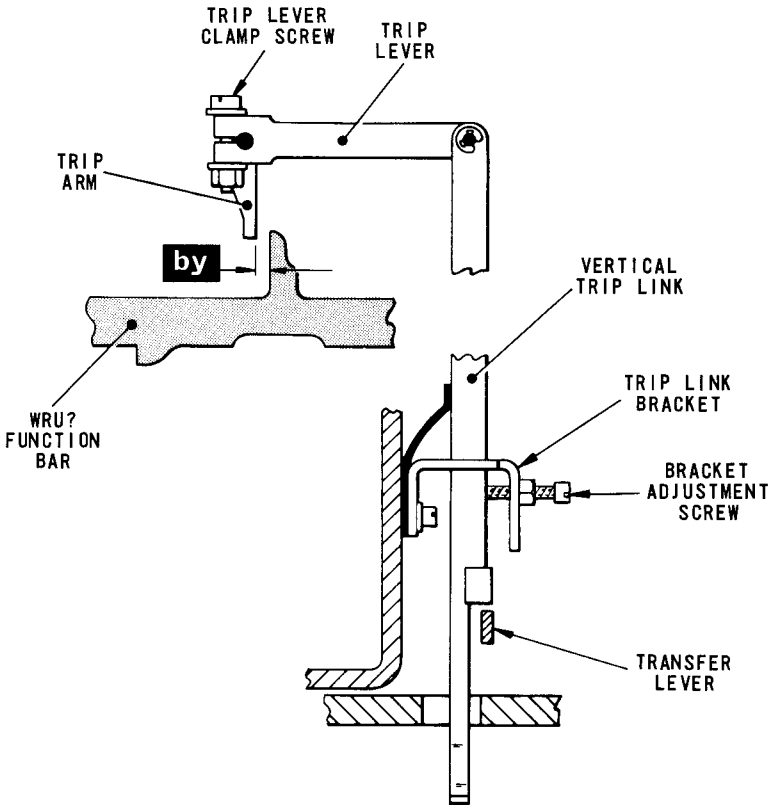


Fig. 4.88 TRIP ARM/WRU? FUNCTION BAR CLEARANCE

Action

108.3 To adjust, slacken the screw clamping the trip lever and holding the trip link upwards against its stop, move the trip lever until dimension 'by' is satisfied. Tighten the trip lever clamp screw.

†109. TRANSFER LEVER BRACKET

Check

109.1 Move the shift lever, Fig.4.53, to the Figures position. Depress the WRU? key and allow the key to remain locked down by its locking bar. Depress the vertical trip link, Fig.4.87, and check that the block on the link passes **behind** the transfer lever with a clearance of .010 - .025 in.

Action

109.2 To adjust, remove the operation counter, slacken the screws securing the transfer lever bracket and move the bracket until the clearance is satisfied. Tighten the bracket screws and refit the operation counter.

†110. TRIP LINK STOP SCREW

Check

110.1 With the machine in the rest condition, check that the front face of the transfer lever, Fig.4.88, is in line with the front face of the block on the vertical trip link.

Action

110.2 If this is not so, remove the operation counter, slacken the locknut of the trip link bracket adjustment screw and turn the adjustment screw until the two faces are in line. Clamp the adjustment screw in this position with its locknut and refit the operation counter.

111. FEED PAWL

Check

111.1 Depress the 'Here Is' key or, if the machine has no keyboard, move the shift lever, Fig.4.53, to the Figures position and set up the WRU? code (MSSMS) on the pins. Lift the translator clutch abutment and turn the machine by hand until the feed pawl, Fig.4.89, is in its extreme left-hand position. Check that there is now a clearance of .002 - .010 in. (dimension 'bz') between the retention pawl and the next tooth of the ratchet wheel.

Action

111.2 To adjust, slacken the screw securing the feed pawl eccentric pivot and turn the pivot until dimension 'bz' is achieved. Tighten the pivot screw.

112. FEED PAWL STOP

Check

112.1 Depress the 'Here Is' key or, if the machine has no keyboard move the shift lever, Fig.4.53, to the Figures position and set up the WRU? code (MSSMS) on the pins. Lift the translator clutch abutment and turn the machine by hand until the feed pawl, Fig.4.89, is in its extreme left-hand position. Check that the feed pawl stop is now lodged tightly against its rack.

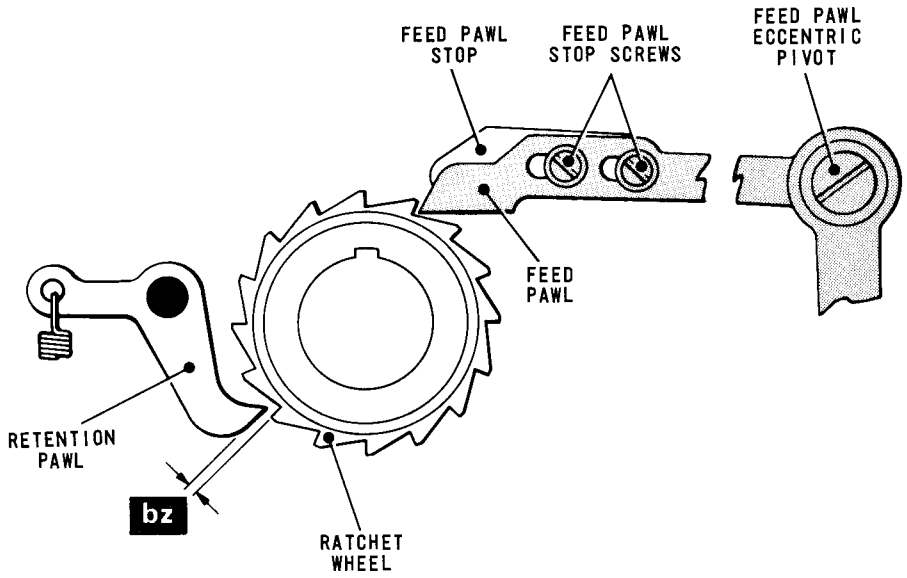


Fig. 4.89 ANSWER-BACK FEED MECHANISM

Action

112.2 To adjust, slacken the screws securing the feed pawl stop and move the stop until the condition is satisfied. Tighten the stop screws.

## C. END-OF-LINE INDICATOR

### 113. TRIP MECHANISM

Check

113.1 Switch on the motor, slide the typehead to the right and check that the end-of-line indicator lamp lights as the typehead reaches the required distance from the end of the platen. The standard setting is 55 characters from the left-hand margin.

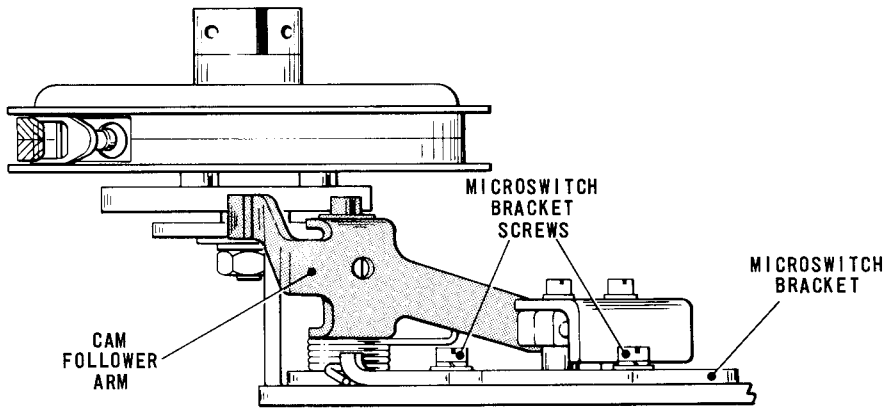


Fig. 4.90 END-OF-LINE INDICATOR TRIP MECHANISM

Action

113.2 To adjust, slacken the screws securing the microswitch bracket, Fig.4.90, and swing the microswitch clear of the cam follower arm. With the typehead at the point at which the lamp is required to light, slowly swing the microswitch bracket round until the lamp just lights and secure the bracket in this position with its screws.

## D. AUTOMATIC CARRIAGE-RETURN/LINE-FEED

### 114. LINE LENGTH

Check

114.1 Slide the typehead to the right until it is in position to print the final character of the required line length. Depress any printing key on the keyboard or, if the machine has no keyboard, set up any printing code on the pins. Lift the translator clutch abutment and turn the machine by hand until the final character has been printed. Continue to turn the machine slowly until the feed rack reaches its extreme right-hand position.

114.2 Check that the flanged pin, Fig.4.91, on the typehead carriage has now operated the feed lever, thus causing the feed lever latch to drop into the bottom step of the lever.

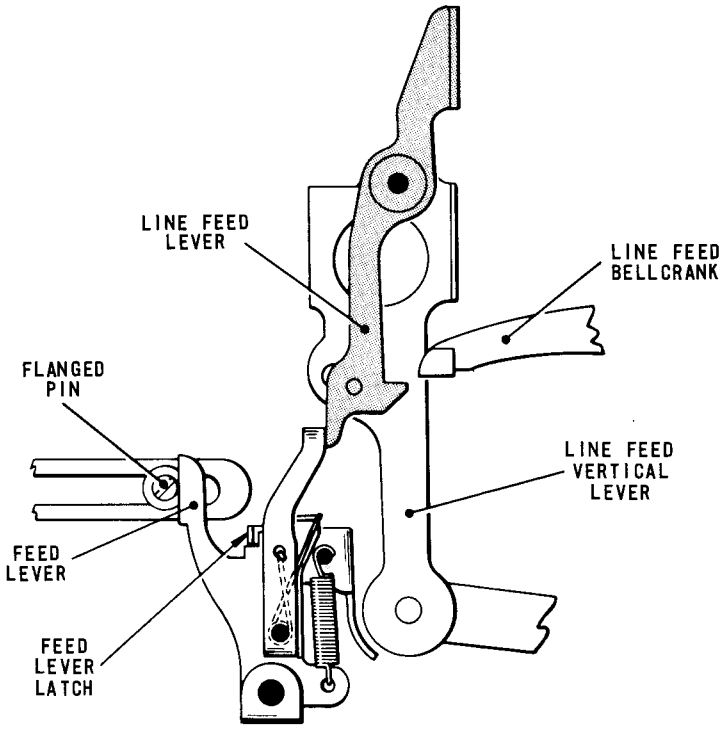


Fig. 4.91 AUTOMATIC CARRIAGE-RETURN/LINE-FEED MECHANISM

114.3 Return the machine to the rest position. Lift the translator clutch abutment and turn the machine by hand until the line-feed vertical lever moves down. Check that the feed lever latch is now released from the feed lever, thus allowing the feed lever to return to its rest position.

Action

114.4 To adjust, slacken the nut securing the flanged pin, move the pin to its extreme left-hand position and re-tighten the nut until it is friction tight. Return the machine to the rest position and repeat Check 114.1. Slide the pin to the right until the feed lever is so positioned that the feed lever latch just drops into the bottom step of the lever. Return the typehead carriage to the left-hand position and fully tighten the nut securing the flanged pin.

Check

114.5 Slide the typehead to the right until it is in position to print the penultimate character of the required line length. Depress any printing key on the keyboard or, if the machine has no keyboard, set up any printing code on the pins. Lift the translator clutch abutment and turn the machine by hand until the feed rack reaches its extreme right-hand position and the line feed bellcrank is on the highest point of its cam. Move both the line feed and carriage return levers up and down and check that there is now some clearance between the bellcranks and their latches.

Action

114.6 If either the line feed or carriage return bellcranks foul their latches, reset the position of the flanged pin.

Check

114.7 Return the machine to the rest position. Depress any printing key or, if the machine has no keyboard, set up any printing code on the pins. Lift the translator clutch abutment and turn the machine by hand until the feed rack reaches its extreme right-hand position. Operate the manual carriage return lever and check that the feed lever latch is engaged with the bottom step in the feed lever.

114.8 Repeat Check 114.3.

Action

114.9 Refine Adjustment 114.4 and, if necessary, 114.6.

## E. TWO-COLOUR PRINTING

### 115. OPERATING CHECK AND SETTING UP PROCEDURE

★ Before carrying out the following adjustments, ensure that a two-colour black and red ink ribbon is fitted to the machine. Check that the black portion of the ribbon (used for incoming messages) is at the top of the ribbon jumper and the red portion (used for local copies of outgoing transmissions) is at the bottom.

● In the interests of safety, it is recommended that the motor is switched off while Adjustments 115.4(a) to (m) inclusive are carried out.

Check

115.1 Operate the carriage return manual lever. Print a few characters then operate the carriage return manual lever again. Check that the top of the ink ribbon is level with the bases of the printed characters.

115.2 Run out a line of letter 'T' and check that the characters are printed wholly in red.

115.3 (a) *If an external source of signals is available,* transmit a line of letter 'Q' into the machine and check that the characters are now printed wholly in black.

(b) *If no external source of signals is available,* it is possible to simulate an incoming message by slackening the screw clamping the trip lever, Fig.4.92, to the lag weight release shaft and swinging the lever clear of the slat latch. Clamp the lever in this position, run out a line of letter 'Q' and check that the characters are now printed wholly in black. If this method of simulating an incoming message is used, it will be necessary to re-adjust the position of the trip lever on completion of the check. Adjustments 115.4(k) to (m) refer.

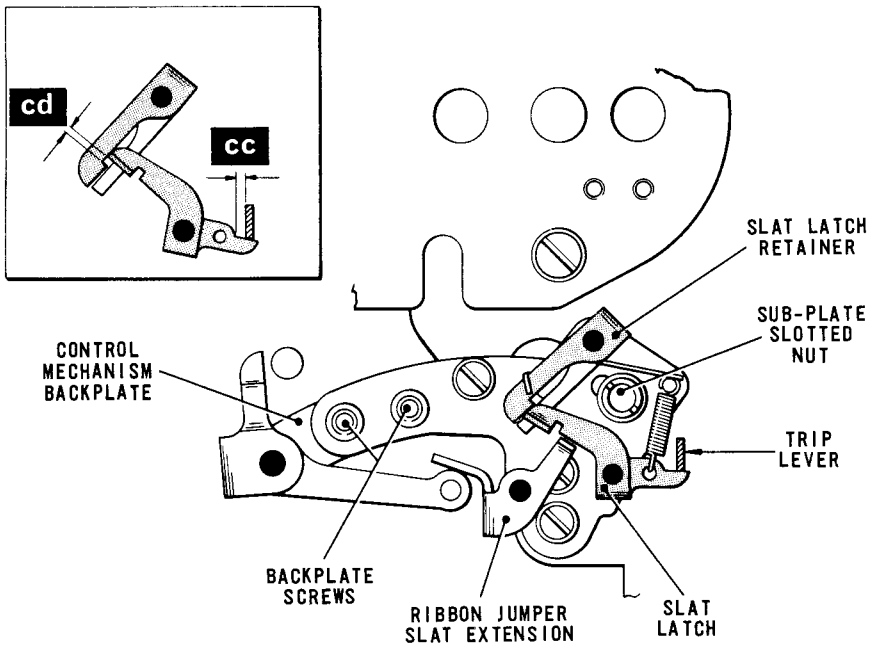


Fig. 4.92 TWO-COLOUR PRINTING—LATCH MECHANISM

Action

115.4 If any of the above conditions are not satisfied, adjust the mechanism by carrying out the following procedure.

(a) If it has not been done already, slacken the screw clamping the trip lever, Fig.4.92, to the lag weight release shaft and move the lever clear of the slat latch.

(b) Slacken the locknut of the lift lever eccentric, Fig.4.93, and turn the eccentric to its mid-position. Tighten the locknut.

(c) Using a tommy pin, slacken the two screws securing the control mechanism backplate, Fig.4.92, and move the backplate to the limit of its movement towards the front of the machine. Lightly clamp the screws securing the backplate.

(d) With the machine in the rest position, lift the slat latch so that it latches on the slat latch retainer. Slide the typehead carriage to its extreme right-hand position. Depress the key of any character on the top layer of the typehead check that the translator clutch abutment is lifted and turn the machine by hand until the typehead moves forward to print.

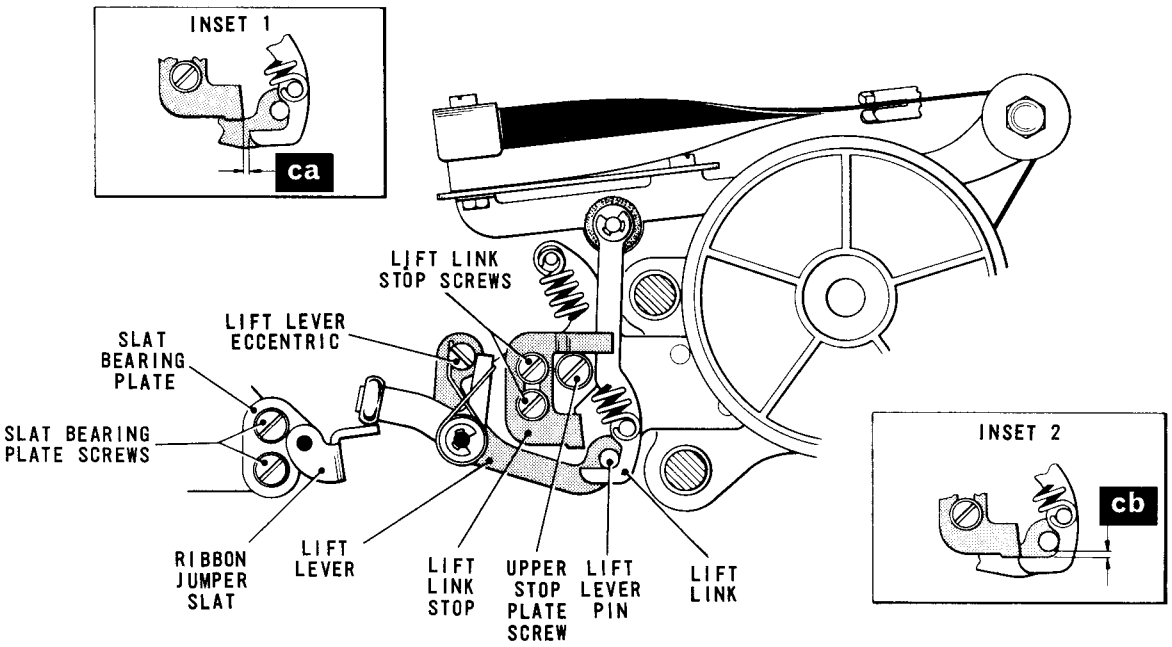


Fig. 4.93 TWO-COLOUR PRINTING—LIFT LINK MECHANISM

(e) Press the typehead casting forward so that the typehead moves towards the platen and check that the selected character is centrally positioned with respect to the lower (red) portion of the ribbon. If necessary, slacken the screw securing the lift link upper stop plate, Fig.4.93, and position the stop plate so that the condition is satisfied. Tighten the stop plate screw.

(f) Depress the ribbon jumper and check that the hook on the lift link is cammed out by the pin on the ribbon lift lever to clear the vertical edge of the lift link stop by approximately .015 in. (dimension 'ca' - inset 1). If necessary, slacken the screws securing the lift link stop until friction tight and tilt the stop slightly until the condition is satisfied. Tighten the stop screws.

(g) Lift the ribbon jumper slat so that its extension, Fig.4.92, is held by the slat latch and the hook on the lift link, Fig.4.93, moves down and rests against the bottom of the lift link stop. Press the typehead casting forward so that the typehead moves towards the platen and check that the selected character is now centrally positioned with respect to the upper (black) portion of the ribbon. To adjust, slacken the screws securing the lift link stop until friction tight and reposition the stop until the condition is satisfied. Tighten the stop screws.

(h) With the lift link latched under the edge of its stop, check that there is a clearance of .016 - .025 in. (dimension 'cb' - inset 2) between the pin on the ribbon lift lever and the horizontal face of the hook on the lift link. To adjust, slacken the sub-plate slotted nut, Fig.4.92, and the locknut of the lift lever eccentric, Fig.4.93. Reposition both the sub-plate and the eccentric until dimension 'cb' is obtained. Tighten the slotted nut and the eccentric locknut. Obtain the final setting with both adjustments as near the centre of their movements as possible.

(j) Operate the carriage return manual lever and check that dimension 'cb' is still present when the typehead is in its extreme left-hand position. If necessary, slacken the screws securing the slat bearing plate and adjust the height of the plate until dimension 'cb' is achieved. Tighten the bearing plate screws, ensuring that the pressure rollers are lightly engaged with the platen and have an even pressure.

(k) Position the trip lever, Fig.4.92, so that it just touches the slat latch and is approximately .015 in. (dimension 'cc' - inset) clear of the corner of the latch. Return the machine to the rest position.

(l) Slacken the screws securing the control mechanism backplate and move the backplate until the top of the ink ribbon is level with the base of the printed characters. Tighten the backplate screws.

(m) Depress any key on the keyboard and turn the machine by hand until the typehead moves forward to print. Check that there is now a clearance of .010 - .030 in. (dimension 'cd' - inset) between the engagement faces of the trip latch and the slat latch retainer. If necessary, reposition the trip lever until this clearance is obtained. Clamp the trip lever and return the machine to the rest position. Check that the trip latch has returned to its rest position and is not influenced by the trip lever. If necessary, refine the setting of the trip lever.

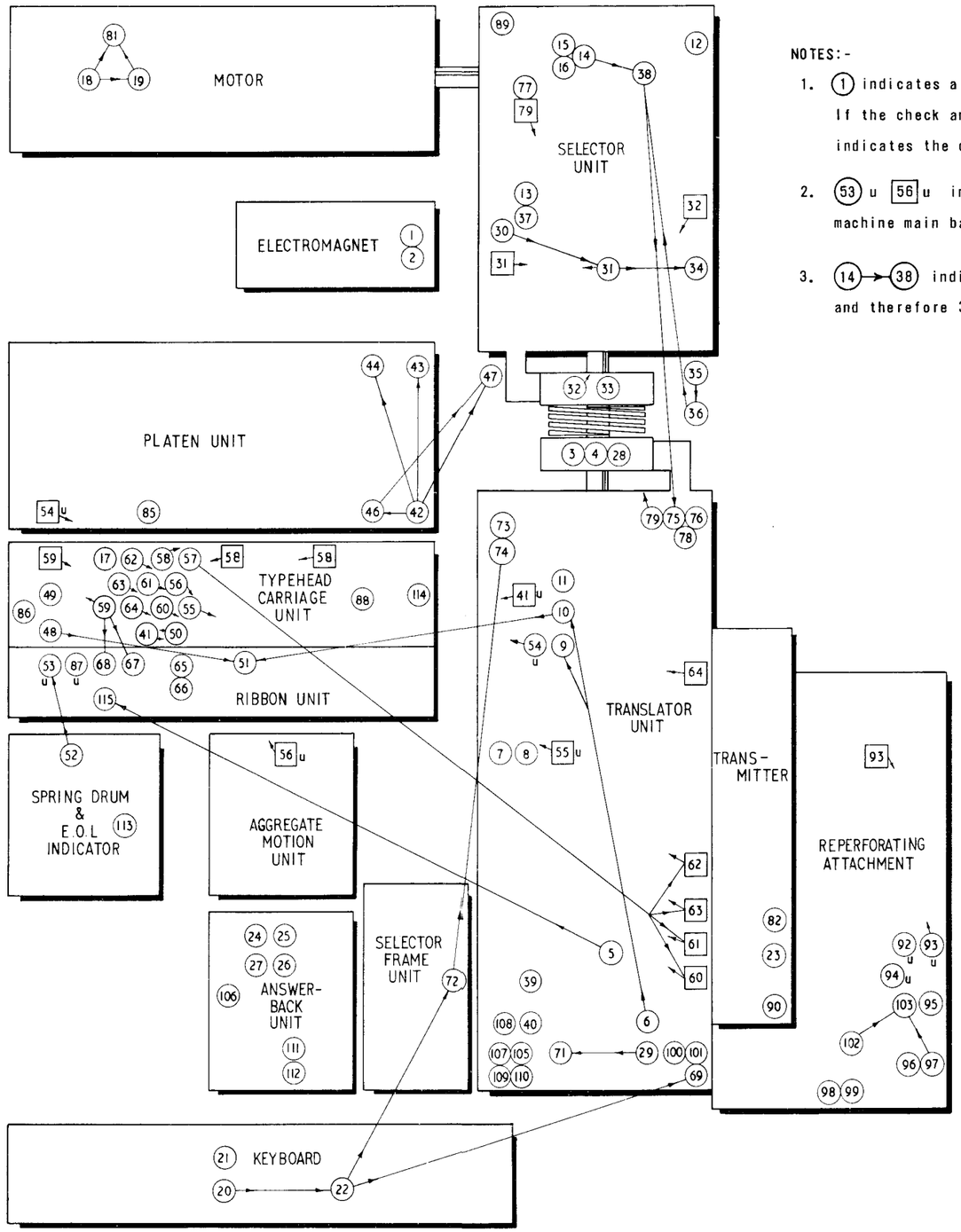


NOTES:-

1. (1) indicates a check point with an adjacent adjustment. If the check and adjustment points are apart, then (31) indicates the check and [31] the adjustment point.
2. (53) u [56] u indicates that the point is underneath the machine main base.
3. (14) → (38) indicates that adjustment 14 may effect 38, and therefore 38 should be re-checked if 14 is altered.

Fig. 4.94 ADJUSTMENT INTERLOCK CHART

# PART 5

## CONTENTS

## DISMANTLING AND ASSEMBLING INSTRUCTIONS


Page

General ..... 1

Section A.

TO DISMANTLE THE MACHINE INTO UNITS

1. Reperforating Attachment ..... 2
2. Operating Counter ..... 2
3. Transmitter Unit ..... 2
4. Answer-Back Unit ..... 2
5. Selector Frames Unit ..... 2
6. Keyboard ..... 3
7. Motor Unit ..... 3
8. End-of-Line Indicator and Carriage Return Spring Drum ..... 3
9. Ribbon Unit ..... 3
10. Typehead Carriage Unit ..... 3
11. Aggregate Motion Unit ..... 4
12. Selector Unit ..... 4
13. Function Bar Unit ..... 4
14. Translator Unit ..... 5
15. Electromagnet ..... 5
16. Platen Unit ..... 6

Section B.

TO REASSEMBLE THE UNITS TO THE MACHINE

1. Electromagnet ..... 7
2. Translator Unit ..... 7
3. Function Bar Unit ..... 7
4. Selector Unit ..... 8
5. Aggregate Motion Unit ..... 8
6. Typehead Carriage Unit ..... 9
7. End-of-Line Indicator and Carriage Return Spring Drum ..... 9
8. Ribbon Unit ..... 9
9. Platen Unit ..... 10
10. Motor Unit ..... 10
11. Keyboard ..... 10
12. Selector Frames Unit ..... 10
13. Answer-Back Unit ..... 10
14. Transmitter Unit ..... 10
15. Operation Counter ..... 11
16. Reperforating Attachment ..... 11

Page

Section C.

TO DISMANTLE INDIVIDUAL UNITS

1. Keyboard ..... 12
2. Motor Unit ..... 12
3. Ribbon Unit ..... 13
4. Typehead Carriage Unit ..... 13
5. End-of-Line Indicator and Carriage Return Spring Drum ..... 14
6. Selector Unit ..... 15
7. Function Bar Unit ..... 16
8. Translator Unit ..... 16
9. Platen Unit ..... 20
10. Answer-Back Unit ..... 21
11. Reperforating Attachment ..... 21

Section D.

TO REASSEMBLE INDIVIDUAL UNITS

1. Keyboard ..... 23
2. Motor Unit ..... 23
3. Ribbon Unit ..... 25
4. Typehead Carriage Unit ..... 25
5. End-of-Line Indicator and Carriage Return Spring Drum ..... 27
6. Selector Unit ..... 27
7. Function Bar Unit ..... 28
8. Translator Unit ..... 28
9. Platen Unit ..... 32
10. Answer-Back Unit ..... 33
11. Reperforating Attachment ..... 34

# LIST OF ILLUSTRATIONS

Fig. 5.1 Location of Unit Securing Screws

# PART 5

# DISMANTLING AND ASSEMBLING INSTRUCTIONS

## GENERAL

The dismantling and assembling instructions for the Model Seventy-five Teleprinter are divided into four main sections, as follows:

Section A - To dismantle the machine into units

Section B - To reassemble the units to the machine

Section C - To dismantle individual units

Section D - To reassemble individual units

The instructions in Sections A and B are presented in a convenient sequence for dismantling and reassembling a complete machine for a major overhaul. The detailed instructions for each unit, however, are given in such a way that it it possible to dismantle or reassemble the majority of the individual units on their own, as required. The exceptions to this procedure are the Typehead Carriage, Function Bar, Translator and Platen Units. The Translator Unit, in fact, cannot be dismantled or reassembled without prior removal of most of its adjacent units.

The disturbance of some adjustment points is unavoidable when dismantling, although the procedure given avoids this as far as possible. To obviate any excessive re-adjustment which might otherwise be unnecessary, it is essential that units are mounted firmly against their abutments when reassembled to the machine.

When reassembling a complete machine in the order given in Section B, it is advisable to carry out the reassembly and necessary adjustments in stages. A recommended sequence is given in the introduction to the Adjustment Instructions (Part 4, page 1). This describes the method of co-ordinating the reassembly and adjustment instructions so that the machine can be more readily brought to full working order after it is finally reassembled.

In the following instructions it is assumed that the main teleprinter cover has already been removed, thus allowing full access to the units concerned, Fig. 5.1 shows the location of all the screws securing the units to the machine, except those of the Reperforating Attachment and Electromagnet. In all other instances where figure references are required, the relevant exploded diagram in Part 7 is used in order to provide greater detail, particularly when dismantling and assembling the individual units.

When carrying out the instructions in sections A and C, it is important to note the position of any shims or washers dismantled, and also the length of screws as they are removed.

- Always remove the signal and power plugs from the rear of the machine main base before starting to dismantle any part of the machine.

- Take extreme care when winding or unwinding the carriage return spring drum as the spring is very powerful. It is advisable to hold a piece of rag in the hand when winding or unwinding the drum.

- Avoid moving screws which have been painted red unless a specific instruction to do so is given. Some of these red screws control one-time adjustments set at the initial assembly stage but others have been set to gauges in the factory and cannot be reset easily under field conditions.

# A. TO DISMANTLE THE MACHINE INTO UNITS

## 1. REPERFORATING ATTACHMENT

1.1 Remove the three screws securing the reperforator side cover DP, Fig.7.40, and the screw that secures the lower (curved) side cover DQ. Take off both covers.

1.2 Remove the three screws securing the reperforator support bracket A to the machine main base.

1.3 Slacken the screw securing the punching arm special pivot AN. Insert a tommy pin through the hole in the punching arm pivot and gently ease the pivot approximately ¼ in. (6.4 mm) towards the front of the machine. Remove the tommy pin.

1.4 Withdraw the unit from the machine.

## 2. OPERATION COUNTER

2.1 Remove the front two screws T, Fig.5.1. Slacken the rear screw T, slide the unit towards the front of the machine and lift it off the main base.

## 3. TRANSMITTER UNIT

3.1 Remove the three screws P, Fig.5.1, securing the transmitter cover and lift off the cover.

3.2 Disconnect the 18-way signals socket from its plug G, Fig.7.37, and carefully pull off the connexions to the Bell and WRU? contacts.

3.3 Dismantle the transmitter unit from the machine by one of the following methods according to the circumstances, taking care not to damage the code contacts and spring assemblies when lifting off the unit.

(a) If the transmitter unit **only** is required to be dismantled, remove the three screws (two on the left-hand, one on the right-hand side) securing the contact mounting plate A to the contact plate support Y, Fig.7.17, and lift off the unit.

(b) If it is intended later to dismantle the function bar unit from the machine, remove the four screws (two at each end) securing the contact plate support to the translator unit front and rear frames, and lift off the support together with the transmitter unit.

## 4. ANSWER-BACK UNIT

4.1 Remove the circlip connecting the top of the transfer lever link BH, Fig.7.36, to the release lever AV.

4.2 Remove the three screws Y, Fig.5.1, and lift the unit off the main base.

## 5. SELECTOR FRAMES UNIT

5.1 Disconnect the answer-back feed pawl spring and swing the feed pawl X, Fig.5.1, clear of the selector frames.

5.2 Remove the two screws W securing the unit front bearing, and slacken the two screws E securing the unit rear bearing. Slacken the trip bar retaining screw U sufficiently enough to allow the trip bar to be withdrawn.

5.3 Slide the unit to the left and lift it off the main base.

## 6. KEYBOARD

6.1 Support the weight of the keyboard with one hand and remove the two screws S, Fig.5.1, with the other.

6.2 Lower the keyboard and withdraw it from the main base.

## 7. MOTOR UNIT

7.1 Remove the two screws G, Fig.5.1, securing the paper guide plate AK and lift off the plate.

7.2 Slacken the two screws J and remove the rear tie rod H.

7.3 Disconnect the motor plug from its socket A on the main base.

7.4 Remove the four screws C securing the motor base and lift the unit clear of the machine.

## 8. END-OF-LINE INDICATOR AND CARRIAGE RETURN SPRING DRUM

8.1 Turn the carriage return spring drum AD, Fig.5.1, clockwise approximately 1/8 of a turn to relieve the tension on the carriage return tape, and disconnect the hook on the tape from its anchor on the spring drum. Allow the spring to unwind gently.

8.2 Remove the end-of-line indicator lamp AC and disconnect the wiring at terminal block AA.

8.3 Remove the three screws AB and lift the unit clear of the main base.

## 9. RIBBON UNIT

9.1 If not already done, unwind the carriage return spring drum AD, Fig.5.1, as described in paragraph 8.1 above.

9.2 Position the typehead carriage in the centre of its traverse.

9.3 Remove the four screws F (two at each end) securing the ribbon unit and take off the unit complete with its guide rails and brackets. Take care not to lose the cam roller CO, Fig.7.23, or its lubricating washer.

★ Note that the top right-hand screw F, Fig.5.1, also secures the function bar unit.

## 10. TYPEHEAD CARRIAGE UNIT

10.1 If not already done, dismantle the ribbon unit from the machine as described in paragraph 9 above.

10.2 Set up any printing combination of the pins, lift the translator clutch abutment and turn the machine by hand until the typehead moves forward to print.

10.3 Remove the two screws securing the print rail coupling AH, Fig.5.1.

10.4 Disconnect the carriage feed link AE by operating the carriage return lever AF and sliding the link out of its slot.

10.5 Remove the two screws AG and take off the left-hand typehead bearing block, noting any shims.

10.6 Withdraw the typehead carriage unit carefully to the left and lift it clear of the main base.

## 11. AGGREGATE MOTION UNIT

11.1 Remove the left-hand screw securing the traverse pivot bracket AV, Fig.7.16, to the translator unit front main frame, and temporarily slacken the bracket right-hand screw. Carefully lift the left-hand end of the pivot bracket clear of the aggregate motion mechanism and then secure it in this position by tightening the bracket right-hand screw.

11.2 Remove the nut (underneath the main base) securing the aggregate motion levers main pivot D, Fig.5.1.

11.3 Disconnect the aggregate motion lever springs and the compensator cam lever spring V.

11.4 Disconnect the circlips at Z and AJ, and lift the pushrod assemblies clear of their pivots.

11.5 Carefully withdraw each pushrod from its associated bellcrank lever.

## 12. SELECTOR UNIT

12.1 If not already done, disconnect the 18-way signals socket from its plug G, Fig.7.37, and carefully pull off the connexions to the Bell and WRU? contacts.

12.2 Remove the cleats securing the wiring to the translator unit rear frame and the selector unit casting, and move the wiring clear of the selector unit.

12.3 Remove the two screws K, Fig.5.1, and lift off the trip shaft M together with its bracket.

12.4 Ensure that the translator clutch is in the rest position so that the translator clutch bands are free of the selector clutch drum. Remove the three screws L securing the selector unit to the main base.

12.5 Disconnect the pecker frame spring T, Fig.7.15, and the traverse spring BA, Fig.7.16. Remove the screw securing the pecker slide block AZ and lift off the block.

12.6 Slowly and carefully ease the selector unit away from the translator unit and lift it off the main base.

## 13. FUNCTION BAR UNIT

13.1 If not already done, dismantle the transmitter unit from the machine as described in paragraph 3 above.

13.2 Disconnect the spring DX, Fig.7.17, from its anchor on the lag weight trip lever DW.

13.3 Remove the circlip connecting the top of the answer-back trip link CT, Fig.7.16, to the answer-back trip lever CS.

13.4 Ensure that the translator camshaft is in the rest position and insert a tommy pin through the hole in the function reset bar W, Fig.7.18. This ensures that the function bars remain in place when the unit is removed.

13.5 Lift the translator clutch abutment and turn the camshaft by hand through approximately half a revolution. Depress the extension arm of the function reset shaft on to the push rod W, Fig.7.17, to ensure that there is a clearance between the rear end of the function reset bar and the abutment block S.

13.6 Remove the four screws R, Fig.5.1, securing the unit and lift it off the translator unit.

★ If the ribbon unit has not already been dismantled, it will be necessary to remove the top right-hand screw F in addition, as this screw secures both units.

## 14. TRANSLATOR UNIT

14.1 If not already done, dismantle the following units from the machine.

Reperforating Attachment (paragraph 1 above refers)
Selector Frames Unit (paragraph 5 above refers)
Ribbon Unit (paragraph 9 above refers)
Typehead Carriage Unit (paragraph 10 above refers)
Aggregate Motion Unit (paragraph 11 above refers)
Selector Unit (paragraph 12 above refers)

★ In addition, if the machine is fitted with a Tape Reader, it will be necessary to dismantle the Keyboard as described in paragraph 6 above.

14.2 Remove the circlip connecting the top of the line feed link Q, Fig.5.1, with the platen unit right-hand side plate.

14.3 Disconnect the print beam AY, Fig.7.9, by removing the screw securing the pin retainer BX, Fig.7.17, to the print shackle BU. Take off the retainer followed by its pin BV.

14.4 Remove the six screws N, Fig.5.1, which secure the unit to the main base.

14.5 Remove the screw securing the bracket L, Fig.7.17, to the platen unit right-hand side plate, and gently lift the unit off the main base.

★ If the machine has a sprocket feed platen, before attempting to lift the unit off the main base it will be necessary to remove the two screws securing the bracket to the translator unit rear frame and take off the bracket. This is because of the length and position of the sprocket feed change lever. If this is done, refit the bracket to the translator unit rear frame and secure it with its two screws after the unit has been removed.

## 15. ELECTROMAGNET

15.1 If not already done, dismantle the motor unit from the machine as described in paragraph 7 above.

15.2 If the machine has been used on single-current operation, disconnect the biasing springs AX, Fig.7.19, from the electromagnet armature.

15.3 Stand the machine on its back, remove the five screws securing the SRBF cover plate and take off the plate.

15.4 Disconnect the two leads from the electromagnet to its terminal block. Slacken the two screws securing the terminal block to the main base and move the block clear of the magnet base.

15.5 Remove the four screws securing the electromagnet to the main base and withdraw the magnet through the hole in the main base casting.

## 16. PLATEN UNIT

16.1 If not already done, dismantle the motor unit from the machine as described in paragraph 7 above, and remove the bracket L, Fig.7.17, which secures the platen unit right-hand side plate to the translator unit rear frame, as described in paragraph 14.4 above.

16.2 Disconnect the print spring mechanism by unscrewing the special hexagonal nut AB, Fig.7.4, on the spring adjustment link AC.

16.3 Remove the four screws B, Fig.5.1, securing the platen unit to the main base and lift off the unit.

# B. TO REASSEMBLE THE UNITS TO THE MACHINE

## 1. ELECTROMAGNET

1.1 Refit the unit to the main base and secure it with its four screws.

1.2 Refit the terminal block and secure it with its two screws.

1.3 Connect the leads from the electromagnet to the terminal block as follows.

Red lead to terminal no.1
Black lead to terminal no.4

1.4 Refit the SRBF cover plate and secure it with its five screws.

1.5 If the machine is to be used on single-current operation, re-connect the biasing springs AX, Fig.7.19, to the electromagnet armature.

## 2. TRANSLATOR UNIT

2.1 Mount the unit in its approximate position on the main base and refit the six screws N, Fig.5.1, friction tight.

2.2 If the platen unit is already assembled, refit the bracket L, Fig.7.17, to the platen unit right-hand side plate and secure it friction tight with its screw. Re-connect the line feed link Q, Fig.5.1, to the side plate and secure it with a new circlip.

2.3 Re-connect the print beam AY, Fig.7.9, to the print shackle BU, Fig.7.17, by refitting pin BV and its retainer BX, and then securing the retainer with its screw.

2.4 When the selector unit has been reassembled to the machine, carry out the line-up procedure recommended in paragraph 4.3 below.

## 3. FUNCTION BAR UNIT

3.1 Lift the translator clutch abutment and turn the camshaft by hand through approximately half a revolution. Depress the extension arm of the function reset shaft on to the push rod W, Fig.7.17, ensuring that the push rod is fully engaged at both its top and bottom forks. Check that the function abutment plate R is now protruding through its slot in the function reset mechanism sub-plate E.

3.2 Mount the unit in its position on the translator unit and loosely refit its four securing screws R, Fig.5.1. Press the unit firmly against its abutment plates and tighten the right-hand rear screw first, ensuring that the unit does not clip the abutment plate, then tighten the three front screws.

★ If the ribbon unit is already assembled, refit the top right-hand screw F in addition.

3.3 Return the camshaft to the rest position and remove the tommy pin from the hole in the function reset bar W, Fig.7.18.

3.4 Re-connect the top of the answer-back trip link CT, Fig.7.16, to the answer-back trip lever CS and secure it with a new circlip.

3.5 Re-connect the spring DX, Fig.7.17, to its anchor on the lag weight trip lever DW.

## 4. SELECTOR UNIT

4.1 Ensure that the translator clutch is in the rest position.

4.2 Mount the selector unit against its abutments and secure it with its three screws L, Fig.5.1.

4.3 Ensure that the selector and translator units are correctly lined-up. In the factory this operation is carried out with the help of jigs, but in the field a suitable method of achieving a satisfactory line-up is as follows.

(a) Check that the six translator unit securing screws N, and, if the platen unit is already assembled, the screw securing bracket L, Fig.7.17, are only friction tight.

(b) Turn the selector clutch to the rest position and carry out Adjustment No.32 (Part 4, page 32) to obtain the correct clearance between the selector clutch trigger and its backstop.

(c) Lift the translator clutch abutment and, watching this clearance closely, turn the translator camshaft by hand through one complete revolution. If the two units are lined-up correctly, the clearance will not appear to vary by more than an estimated .003 in. during this operation.

(d) If the clearance variation appears excessive, move the translator unit within the limits imposed by the clearances of its securing screwholes.

(e) Repeat the above procedure until the line-up is satisfactory. Tighten screws N, Fig.5.1, and, if applicable, the screw securing bracket L, Fig.7.17.

4.4 Refit the pecker slide block AZ, Fig.7.16, and secure it with its screw. Re-connect the traverse spring BA and the pecker frame spring T, Fig.7.15.

4.5 Refit the trip shaft M, Fig.5.1, together with its bracket and secure the bracket with its two screws K.

4.6 Refit the wiring cleats to the selector unit casting and the translator unit rear frame, and secure them with their respective screws.

## 5. AGGREGATE MOTION UNIT

5.1 Remove the left-hand screw securing the traverse pivot bracket AV, Fig.7.16, to the translator unit front main frame, and temporarily slacken the bracket right-hand screw. Lift the left-hand end of the pivot bracket and then secure it in this position by tightening the bracket right-hand screw.

5.2 Ensure that all the pins in the pin-box are withdrawn. Lift the translator clutch abutment and turn the camshaft by hand through approximately half a revolution so that the bottom of the bellcrank levers are moved outwards to their fullest extent.

5.3 Mount the aggregate motion mechanism in its approximate position on the main base. Arrange the pushrods in their correct order for reassembly, i.e. 5-4-3-2-1-6 (shift) reading from the front. Refit each pushrod in turn to its associated bellcrank lever in the order recommended below.

Vertical movement. Pushrods 6-2
Horizontal movement. Pushrods 1-3-4-5

★ Note that the forks at the end of the pushrods are positioned between the felt washers and the bellcrank levers.

5.4 Reposition the aggregate motion mechanism on its pivots Z and AJ, Fig.5.1, and secure it in this position by fitting new circlips. Refit the nut (underneath the main base) securing the aggregate motion levers main pivot D.

5.5 Re-connect the compensator cam lever spring V and the aggregate motion lever springs.

5.6 When the unit has been reassembled, return the traverse pivot bracket AV, Fig.7.16, to its horizontal position and secure it with its two screws.

## 6. TYPEHEAD CARRIAGE UNIT

6.1 Ensure that the aggregate motion mechanism is in its rest position. Mount the typehead carriage unit in its approximate position on the main base, then slide the unit to the right so that it engages fully with its right-hand bearing block. Ensure also that the stud on the carriage return link arm U, Fig.7.23, is now engaged in the slot in the carriage return operating arm AU, Fig.7.17.

6.2 Refit the left-hand bearing block, together with any shims that may have been previously assembled. Secure the block lightly by tightening its screws AG, Fig.5.1, two or three turns only.

6.3 Turn the typehead so that the letter 'B' is directly facing the front of the machine and press the typehead downwards as far as it will go.

6.4 Holding the typehead in this position, mesh the carriage unit gears with the lift and rotation racks X and Y, Fig.7.8, on the main base. Press the left-hand bearing block lightly inwards to take up any carriage unit end-play and then fully tighten screws AG, Fig.5.1.

6.5 Re-connect the print rail coupling AH and secure it with its two screws.

6.6 Re-connect the carriage feed link AE by sliding the link into its slot.

## 7. END-OF-LINE INDICATOR AND CARRIAGE RETURN SPRING DRUM

7.1 Mount the unit in its position on the main base and secure it with its three screws AB, Fig.5.1.

7.2 Re-connect the wiring at terminal block AA and refit the end-of-line indicator lamp AC.

7.3 If the ribbon unit is already assembled, wind the carriage return spring drum as follows.

(a) Slide the typehead to its extreme right-hand position.

(b) Anchor the tape to the typehead carriage and pass it around the carriage return tape roller D, Fig.7.25.

(c) Wind the spring drum four complete turns to obtain the approximate operating spring pressure.

(d) Connect the hook on the tape to its anchor on the spring drum.

## 8. RIBBON UNIT

8.1 Position the typehead carriage in the centre of its traverse.

8.2 Mount the ribbon unit in its position on the main base and secure it with its four screws F, Fig.5.1.

8.3 If not already done, wind the carriage return spring drum as described in paragraph 7.3 above.

## 9. PLATEN UNIT

9.1 Mount the unit in its position on the main base and secure it with its four screws B, Fig.5.1.

9.2 Re-connect the print spring mechanism by securing the special hexagonal nut AB, Fig.7.4, on the spring adjustment link AC.

9.3 If not already done, refit the bracket L, Fig.7.17, to the platen unit right-hand side plate and secure it with its screw.

## 10. MOTOR UNIT

10.1 Locate the motor base against its abutments and secure it with its four screws C, Fig.5.1.

10.2 Re-connect the motor plug to its socket A on the main base.

10.3 Refit the rear tie rod H, ensuring that the holes in the rod are facing the rear of the machine, and secure it with its two screws J.

## 11. KEYBOARD

11.1 Ensure that the keyboard is in the reset condition, i.e. with the combination bars latched back.

11.2 Refit the unit to the main base and secure it with its two screws S, Fig.5.1.

## 12. SELECTOR FRAMES UNIT

12.1 Mount the unit in its approximate position on the main base and temporarily secure it by tightening the front and rear bearing screws W and E, Fig.5.1, friction tight. Tighten the trip bar retaining screw U.

12.2 Depress the Letters (MMMMM) key and check that there is now a clearance of .015 - .045 in. between the step on each selector bar O, Fig.7.35, and the selector bars traverse plate AQ, Fig.7.16.

12.3 If this clearance is not present for each of the selector bars, reposition the unit until the condition is satisfied. When no further adjustment is required, fully tighten the front and rear bearing screws W and E, Fig.5.1.

## 13. ANSWER-BACK UNIT

13.1 Mount the unit in its position on the main base and secure it with its three screws Y, Fig.5.1.

13.2 Re-connect the top of the transfer lever link BH, Fig.7.36, to the release lever AV and secure it with a new circlip.

13.3 Reposition the answer-back feed pawl X, Fig.5.1, and re-connect the feed pawl spring.

## 14. TRANSMITTER UNIT

14.1 Refit the transmitter unit by one of the following methods according to the circumstances, taking care not to damage the code contacts and spring assemblies in the process.

(a) If the transmitter unit only was dismantled, refit the contact mounting plate A, Fig.7.37, together with the transmitter unit to the contact plate support Y, Fig.7.17, and secure the plate with its three screws.

(b) If the function bar unit was also dismantled from the machine, refit the contact plate support, together with the transmitter unit, to the translator unit front and rear frames and secure the support with its four screws (two at each end).

★ Whichever method of reassembly is used, ensure that the unit is fully seated with the abutment and control plate J, Fig.7.37, touching the translator unit front frame at three points.

14.2 Re-connect the 18-way signals socket to its plug G and refit the connexions to the Bell and WRU? contacts.

14.3 Refit the transmitter cover and secure it with its three screws P, Fig.5.1.

## 15. OPERATION COUNTER

15.1 Mount the unit in its position on the main base and secure it with its three screws T, Fig.5.1.

## 16. REPERFORATING ATTACHMENT

16.1 Mount the unit in its approximate position and secure the reperforator support bracket A, Fig.7.40, lightly to the main base with the three bracket securing screws.

16.2 Insert a tommy pin through the hole in the punching arm special pivot AN and ease the pivot towards the rear of the machine as far as it will go. Tighten the pivot securing screw and remove the tommy pin.

16.3 Press the unit firmly downwards against its abutments and inwards towards the translator unit, and fully tighten the three support bracket screws.

16.4 Refit the lower (curved) side cover DQ and secure it with its screw. Refit the reperforator side cover DP and secure it with its three screws.

# C. TO DISMANTLE INDIVIDUAL UNITS

## 1. KEYBOARD

1.1 Slacken the four screws (two at each end) securing the keyboard mask E, Fig.5.1, to the unit frame and lift off the mask.

1.2 Slacken the two side screws securing the clamp plates FU, Fig.7.34, to the push rod top rack FS and lift off the push rod assembly.

1.3 Slacken the screws securing the four dowel clips EJ and slide the clips out of engagement with the keyboard front plate E, Fig.7.32.

1.4 Remove the four screws (two at each end) securing the clamp plates Q and take off the plates. The combination bar unit may now be withdrawn from the main frame.

## 2. MOTOR UNIT

★ To dismantle the motor unit, the following special tools will be required.

(a) Hide hammer or wooden mallet.

(b) Cranked hexagonal wrench, 1/16 in. (1.6 mm) across the flats.

(c) Bearing extractor (Creed Part No.TA1334).

(d) Piece of hard metal tube not less than 1 in. (25.4 mm) long, about 15/16 in. (23.8 mm) diameter and with a bore of approximately 3/4 in. (19 mm).

2.1 Remove the screw securing the governor contacts assembly AQ, Fig.7.26, and take off the assembly. Take care not to lose the contact peg Q, Fig.7.27.

2.2 Slacken the screw clamping the governor unit AP, Fig.7.26, to the motor shaft and take off the unit.

2.3 Remove the four screws securing the motor to its base Y and lay the base aside.

2.4 Remove the screw securing the motor pinion D, Fig.7.22, to the shaft and take off the pinion. Press out the parallel pin that keys the pinion to the shaft.

2.5 Remove the screw securing the brush box cover A, Fig.7.26, and take off the cover.

2.6 Remove the two motor brushes X. Slacken the four screws which secure the brush boxes V to their mounting plate N and slide the boxes off the plate. Disconnect the boxes from their leads.

2.7 Remove the four screws securing the fan end cover U to the motor body. Tap gently with the mallet on the commutator end of the motor shaft until the shaft is driven through the commutator end bearing E. Withdraw the armature L and cover U from the motor body.

2.8 Remove the three screws securing the fan end bearing cap G and take off the cap, gasket and special washer K.

2.9 With the hexagonal wrench, slacken the two special screws J which secure the bearing retaining washer H to the shaft and remove the washer.

2.10 Tap the fan end bearing E out of the cover U and remove the cover. Screw the three threaded studs of the bearing extractor into the bearing clamp plate C, and fit the pointed end of the capstan-headed extractor screw into the recess at the end of the motor shaft. Turn the capstan with a tommy pin and slowly draw the fan end bearing E, gasket and bearing clamp plate C off the motor shaft. Remove the bearing extractor. Take off the fan end thrust collar B.

2.11 Remove the four screws securing the commutator end cover M and take off the cover. Before removing the brush mounting plate from the cover as described in paragraph 2.12 below, make a special note of the position of the scribed line on the plate with respect to the cover, as this relationship must be maintained when the motor is reassembled.

2.12 Remove the two special screws P which secure the brush mounting plate N to the cover and take off the plate. Remove the three screws securing the commutator end bearing cap F and take off the cap and its adjacent gasket. Take off the commutator end thrust collar B, bearing clamp plate C and the remaining gasket.

2.13 As the commutator end bearing E was fitted whilst the cover M was hot, it cannot be pressed out by hand. Place the cover with its outer face upwards on a hard surface and fit the hard metal tube against the outer race of the bearing. Tap the tube gently with the mallet until the bearing is driven out of the cover.

2.14 Discard the four gaskets which have been removed.

## 3. RIBBON UNIT

3.1 Remove the two nuts securing the left-hand trackrail bracket A, Fig.7.25, and take off the bracket.

3.2 Slide the unit off the trackrails.

3.3 Remove the two ribbon spools, special nuts BD, bushes BC, spool retainers BB, tape retainers AZ and ribbon rollers AY. Unscrew the two roller pivots AW. The ribbon jumper AP may now be removed.

★ If the machine is fitted with two-colour printing mechanism, before removing the jumper it will also be necessary to disconnect the circlip connecting the lift link BG to the jumper. Discard the circlip and the lubricating felt.

3.4 Remove the two special end nuts U, nuts T and compression springs S. Note the position of any shims which may be at either or both ends of the springs.

3.5 Remove the two spool drive plates Q and damping washers P.

3.6 Remove the screws securing the right-hand side plate L and take off the plate.

3.7 Remove the right-hand ratchet coupling V and the circlip behind it. Remove the ratchet W, taking care not to lose the changeover bias spring AN which may attempt to jump out. Remove the remaining circlip and the left-hand ratchet coupling V. Discard both circlips.

3.8 The main unit shaft O may now be removed.

## 4. TYPEHEAD CARRIAGE UNIT

4.1 Slacken the screw securing the carriage return manual lever T, Fig.7.23, and take off the lever.

4.2 Remove the two screws (one at each end) securing the feed and retention racks M and K, and lift off the racks.

4.3 Remove the two nuts securing the right-hand ends of the two guide rails F, and the screw securing the left-hand end of the print rail R.

4.4 Remove the two circlips securing the right-hand ends of the two splined shafts V. Remove the two lubricating felts and take off the end plate E, together with the carriage return splined shaft S and the print rail. Discard the circlips and lubricating felts.

4.5 Slide the typehead carriage assembly AF off the splined shafts V.

4.6 Disconnect the feed and retention pawl springs CB.

4.7 Remove the two screws securing the pawl support plate BX and take off the plate.

4.8 Remove the two screws securing the carriage return lever retainers CG and take off the retainers and the carriage return lever CJ.

4.9 Remove the screw securing the oiler retainer J to the typehead casting and take off the retainer and the lubricating collar H. Discard the collar.

4.10 Disconnect the lifting link tension spring BV. Remove the two shouldered screws BR and rollers BQ, taking care not to lose special washer BT and any shims that may be fitted. Remove the lifting link BL, together with lifting block BO.

4.11 Remove the small nut securing the typehead. The typehead and its sleeve AG may now be removed, taking care not to lose the bush AK. Remove and discard the lubricating strip AJ.

4.12 Disconnect the corrector lever spring BC, remove the screw securing the eccentric BB and take off the eccentric and the corrector lever AZ, taking care not to lose the collar BA.

4.13 Remove the special screw AY securing the corrector bellcrank AX and take off the bellcrank.

4.14 Remove the remaining screw securing the backing plate BH and take off the plate.

4.15 Remove the screw securing the gear retainer AU and take off the retainer, taking care not to lose the two spacing collars. Bevel gear AS may now be removed.

4.16 Drive out the taper pin securing bevel gear AR to the typehead spindle AH and withdraw the spindle through the side of the casting. Take care not to lose any shims that may be present between the bevel gear and the unit casting.

## 5. END-OF-LINE INDICATOR AND CARRIAGE RETURN SPRING DRUM

5.1 Remove the nut underneath the spring drum assembly and take off the end-of-line indicator mounting bracket A, Fig.7.24. Lay the end-of-line indicator mechanism aside.

5.2 Remove the three screws securing the cam U and take off the cam. Withdraw the spring drum pivot O.

5.3 Insert the tips of a pair of snipe-nosed pliers into the holes in the inner (lower) half spring drum P. Holding the outer (upper) half spring drum S firmly, turn the inner drum counter-clockwise. This action unlocks the bayonet-type connexion between the two drums.

5.4 The inner drum may now be removed, together with the spring Q.

## 6. SELECTOR UNIT

6.1 Slacken screw AZ, Fig.7.19, and withdraw the driven gear C, Fig.7.22, from the drive shaft J, Fig.7.19.

6.2 Remove the two screws securing the camshaft gear clamp CO, Fig.7.20, to the selector camshaft BO and take off the clamp. Remove the camshaft gear CN and take off the ball thrust bearing CM which lies behind it, together with the large washer CK which lies between the gear and the bearing.

6.3 Remove the two screws securing the drive shaft bearing block G, Fig.7.19, to the unit casting A and take off the block. Withdraw the drive shaft J from the unit.

6.4 Slacken the screw retaining the bias adjustment clamp DZ, Fig.7.21, and turn the knurled bias adjustment screw EA clockwise as far as it will go. This action will free the rockshaft bearing bracket AC, Fig.7.19, from the spring anchor strip AW.

6.5 Remove the two screws securing the rockshaft bearing bracket AC. Slacken the screw clamping the rockshaft stop arm Q to the rockshaft S. Push the rockshaft out of engagement with its bearing bracket AC and remove the bracket.

6.6 Push the rockshaft S out of engagement with its bearing bracket P and take off the rockshaft, together with its stop arm Q.

6.7 Withdraw the send-receive delay lever EL, Fig.7.21, together with the two break-in levers EQ and ER.

6.8 Remove the screw securing the bias adjustment clamp DZ and take off the clamp. Turn the bias adjustment screw counter-clockwise until it is free. Withdraw the screw and remove the compression spring EC and the two shouldered bushes EB.

6.9 Disconnect the retention locking lever spring CQ, Fig.7.20, from its anchor on the starter mounting bracket C, Fig.7.21.

6.10 Remove the two screws securing the starter main plate D to the unit casting and take off the plate, together with the starter switch mechanism.

★ If the starter switch mechanism is required to be dismantled from the starter main plate, note the correct method of reassembly.

6.11 Remove the two screws securing the guide plate AY, Fig.7.19, and take off the plate. Withdraw the spring anchor strip AW.

6.12 Remove the five screws securing the rockshaft bearing bracket P and the tripshaft bearing bracket AE to the unit casting and take off both brackets, together with the tripshaft AF.

6.13 Remove the special screw CT, Fig.7.20, securing the striker lever CR and the retention locking lever CP on their common pivot and take off both levers, noting the position of any shims that may be present.

6.14 Locate the hole in the unit casting A, Fig.7.19. Turn the camshaft until a grub screw in the collar CH, Fig.7.20, can be seen through the hole. Slacken this screw, turn the shaft through $180^{o}$ and slacken a second grub screw in the same collar.

6.15 Disconnect the retention lever spring CY from its anchor pin. Tap out the camshaft BO complete with its cam assembly and clutch drum.

★ It is not normally necessary to dismantle the cam assembly and this should be avoided wherever possible.

6.16 Remove the three screws securing the camshaft thrust plate CL to the unit casting and take off the plate.

6.17 Remove the three screws securing the spring washer BN and take off the washer. Slacken the knurled head screw BL and ease the orientation casting BE off the shouldered bush B, Fig.7.19, taking care not to lose the clamp shoe BM, Fig.7.20, from the inner end of screw BL.

6.18 Remove the three screws which secure the shouldered bush B, Fig.7.19, and re-insert them finger-tight in the three holes in the bush which previously held the spring washer. Using a screwdriver, carefully tighten each screw a quarter of a turn at a time. Repeat this for each screw in turn until the bush is withdrawn from the casting. Remove the three screws from the bush.

6.19 Insert a suitable length of wooden dowel rod through the hole from which the bush was removed and set it squarely against collar CH, Fig.7.20. Tap out the ballrace CJ, together with the collar.

6.20 Press the clutch trigger BU against its backstop in the clutch frame BT and withdraw the clutch body BQ and camshaft BO from the cam assembly and clutch bands.

## 7. FUNCTION BAR UNIT

7.1 Remove the two screws securing the Bell and WRU? lever pivot bracket Y, Fig.7.18, and take off the bracket.

7.2 As it is essential to ensure that the same function bar spring is reassembled to the same function bar, make a special note of the position of each spring and then disconnect it from its function bar.

7.3 Remove the two screws securing each retaining plate T and take off the plates. Noting carefully the order of withdrawal, lift out each function bar in turn.

★ On no account should the dimension between the front and rear racks C and A be disturbed.

## 8. TRANSLATOR UNIT

8.1 Disconnect the abutment frame return spring DC, Fig.7.17. Slacken screw DF and remove the outer abutment frame CV, taking care not to lose any washers.

8.2 Remove the lag weight spring DU. Disconnect the carriage return lever spring CJ, the letter and line feed lever springs CE, and the two transmitter lever springs EK.

8.3 Remove the circlip connecting the abutment frame trip lever CS and take off the lever and its spring CT.

8.4 Remove the circlip behind the rear frame A which secures the function lever pivot CL and slowly take off the pivot. Remove the following items, noting their order of removal.

Transmitter lever (Start)
Shift bellcrank BL
Function reset lever X
Transmitter lever (Stop)
Print lever BT
Letter feed lever CD
Letter feed bellcrank CF
Carriage return lever CH
Line feed lever CK
Contact operating lever DZ

8.5 Rear frame A may now be removed.

8.6 Remove the two screws securing the pivot bracket AM, Fig.7.16, to the front main frame A.

8.7 Remove the circlip connecting the traverse multiplying lever AN to the pin-box end block AC. Remove the two screws securing the traverse control bracket AS to the front main frame and take off the multiplying lever and shouldered pin AT.

8.8 Remove the two screws securing the traverse lever pivot bracket AD to the base plate and take off the bracket.

8.9 Remove the two screws securing the front slide plate AO and take off this plate and the selector bars traverse plate AQ.

8.10 Ensure that all the pins in the pin-box are reset. Remove the screws securing the front pin-box guide plate AU, raise the selector plate lift frame BQ and take off the complete pin-box, together with its guide plate.

8.11 Disconnect the five springs CH from their respective selector code plates BS.

8.12 Disconnect the circlip connecting the traverse link AG, Fig.7.15, to the traverse bellcrank AW, Fig.7.16.

8.13 Remove the two nuts securing the main plate stay G, and the circlips connecting the front ends of the print control shaft BB and selector lever pivot BL to the front main frame. Remove the nut securing the front main frame support pin C.

8.14 Disconnect the five springs CG connecting the transmitter cam followers CB to the stop bracket CK.

8.15 Remove the two screws securing the stop bracket CK and take off the bracket.

8.16 Remove the two screws securing the bellcrank rack CM and take off the rack, taking care not to lose the two bushes CN.

8.17 Remove the two screws (underneath the base plate) securing the front main frame A. Disconnect spring E from its anchor on lubricator D. The front main frame may now be removed.

8.18 Remove the screw securing the print release pivot arm BJ to the print control shaft BB. Remove the inner circlip and take off the shaft.

8.19 Remove the two screws securing the selector plate rack support H to the middle main frame F. Withdraw the selector lever rack CJ, together with its support H, from the selector code plates BS. The selector code plate assembly may now be removed.

To Dismantle the Selector Assembly

8.20 Withdraw the selector lever pivot BL slowly, together with the print release lever BO. Remove each selector and transmitter lever in turn, noting carefully the order of removal.

★ Each selector lever has a reference number stamped on it for identification purposes, but it is just as important to note the order of the transmitter levers, as these must be reassembled in their correct order otherwise the transmitter timing will be disturbed.

To Dismantle the Vertical Levers and Cam Assemblies

8.21 Remove the two screws securing the vertical lever rack support AA, Fig.7.17, to the rear bearing. Remove the screw securing the support to the shift and

function reset rack T, Fig.7.16. Lift off the vertical lever rack Z, Fig.7.17, together with its support, noting the correct engagement of the rack with its associated levers.

★ If it is necessary to remove the screws securing the vertical lever rack to its support, note the position of the rack carefully as this is set in the factory to obtain optimum clearance and engagement of the vertical lever latches with their associated function bars.

8.22 Remove the two screws (underneath the base plate) securing the rear strike bearing M, Fig.7.15. Note that one of the screws is a long one and also secures the traverse rear bearing X.

8.23 Slacken the two special screws U which secure the pecker frame O to the striker shaft N. Withdraw the shaft from the front strike bearing M and the pecker frame. Remove the shaft and frame.

8.24 Withdraw the print adjustment rod CC, Fig.7.17, from the unit base plate.

8.25 Remove the two screws securing the middle main frame F, Fig.7.16, to the base plate. Disengage the bearing on the frame from traverse shaft Y, Fig.7.15, and lift off the frame.

8.26 Remove the six screws securing the rear bearing block DP, middle bearing block DO and front camshaft bearing block AJ to the base plate. Lift off the complete camshaft assembly.

8.27 Remove the three remaining screws securing the traverse rear bearing X and take off the bearing, together with the traverse shaft Y.

8.28 Remove the two screws securing the carriage return and line feed rack AR, Fig.7.17, and take off the rack, complete with its associated lever assembly.

8.29 The procedure for further dismantling of any items still attached to the unit framework will be obvious and should present no complications.

8.30 Discard all circlips and lubricating felts removed.

To Dismantle the Main Camshaft

★ It is essential that the components which comprise the main camshaft are reassembled in their correct order. Each cam has a reference letter or letters stamped on it for identification purposes (this reference is given in brackets below), but spacers and shims are not marked so a careful note must be made of their number and positions on the shaft as they are removed. It should also be noted that, owing to manufacturing tolerances, the number of shims used and their positions on the shaft may vary from the detailed list given below.

8.31 Remove the special nut AN, Fig.7.15, from the end of the selector traverse shaft AK. Take off the compensator lever AL, noting the position of the special washer AO.

8.32 Remove the nut, spring washer and washer from the front end of the main camshaft, followed by the keyboard reset cam (W)BJ, cam spacer BK, compensator cam (VA)BM, key BO, washer BL and bush BN.

8.33 Remove the front camshaft bearing block AJ, complete with its ballrace BP.

8.34 Remove the components on the main camshaft in the following sequence.

Bush BQ
Answer-back cam (U)BR
Cam spacer BS
Traverse drive gear BT

Key BU
Special washer BV
Bush BW
Retention and pin reset cam (T)BX
Shims BY
Cam spacer BZ
Print and feed control cam (S)CA
Cam spacer CB and shim
Selector plate lift cam (J)CC
Cam spacer BZ
Transmitter cam No.5 (R)CD
Cam spacer BZ and shim
Type rotation cam (Q)CE
Cam spacer BZ
Transmitter cam No.4 (P)CF
Cam spacer BZ and shim
Type rotation cam (K)CG
Cam spacer BZ
Transmitter cam No.3 (O)CH
Cam spacer BZ
Type rotation cam (K)CG
Cam spacer BZ
Transmitter cam No.2 (N)CJ
Cam spacer BZ and shim
Type lift and shift cam (M)CK
Cam spacer BZ
Transmitter cam No.1 (L)CL
Cam spacer BZ
Type rotation cam (K)CG
Shims BY
Cam spacer CM
Selector plate lift cam (J)CC
Key CN

★ Before removing the middle bearing block DO, note that it contains a loose-fitting roller assembly comprising, in sequence.

(a) Special washer CP
(b) Centre race
(c) 21 roller bearings
(d) Special washer CP.

8.35 Remove the middle bearing block and roller bearing assembly, taking care not to lose any of the rollers.

8.36 Continue removing the components on the main camshaft in the following sequence.

Transmitter cam - Start - (I)CQ
Cam spacer CR
Type rotation cam (K)CG
Cam spacer CS
Pecker operating cam (GA)CT
Cam spacer CU and shim
Function reset cam (G)CV
Cam spacer BZ
Transmitter cam - Stop - (F)CW
Cam spacer CX
Print cam (E)CY
Cam spacer CZ and shim
Letter feed cam (D)DA
Cam spacer DB
Carriage return cam (C)DC
Cam spacer DD and shim
Line feed cam (B)DE

Two shims
Key DF
Bush DG
Lag weight cam (A)DH
Key DJ
Cam spacer DK

8.37 Withdraw the rear bearing block DP, complete with its ballrace DL and two retaining plates DQ and DR.

To Dismantle the Traverse Shaft

8.38 Remove the traverse cam thrust washer AQ. Tap out the pin from the traverse cam AR and take off the camshaft assembly.

8.39 Remove the pin at the rear end of the selector traverse shaft. Slacken the screw securing the retaining bush BF and take off the bush and the pin re-setting frame BE.

## 9. PLATEN UNIT

Friction Feed

9.1 Remove the paper tube CC, Fig.7.30.

9.2 Remove the three screws securing the ratchet feed support plate BC and take off the plate.

9.3 Slacken the screw securing the pressure roller release lever AS and take off the lever.

9.4 Remove the two screws securing the paper guide BN and lift off the guide.

9.5 Disconnect the retention lever spring AW and the paper tension rod spring CJ from their common anchor pin.

9.6 Remove the two screws securing the platen feed ratchet Q. Slacken the two socket-headed screws clamping the platen knob coupling W to the platen spindle P and take off the coupling. The spindle may now be withdrawn to the right and the platen removed.

9.7 Remove one of the pivot screws of paper tension rod CD and take off the rod.

9.8 If any further dismantling is required, this may be achieved by removing the screws securing the side plates A and B.

Sprocket Feed

9.9 Move the top of the sprocket feed change lever S, Fig.7.30, to the right. Slide the distance collar U towards the platen to expose the shouldered screw T which links the lever to the spindle. Remove the screw and take off the lever and distance collar.

9.10 Slacken the screw securing the pressure roller release lever AS and take off the lever.

9.11 Disconnect the retention lever spring AW from its anchor pin.

9.12 Slacken the two socket-headed screws clamping the platen knob coupling W to the platen spindle P and take off the coupling.

9.13 Remove the three screws securing the platen sub-plate V and take off the plate.

9.14 Ensure that all the feed pins H are fully retracted and then carefully slide the complete platen assembly to the left, out of the right-hand side plate.

9.15 With the aid of the platen spindle, expel one of the feed pins just far enough to expose the hole beneath its domed end. Insert an office pin into this hole to maintain the feed pin in position. Repeat this procedure for the remaining 19 pins.

9.16 Remove the three screws securing the ratchet feed support plate BC and take off the plate. Carefully withdraw the platen spindle to the right.

9.17 Remove the three screws securing the platen retention wheel M and take off the wheel.

9.18 Remove the three screws securing the left-hand platen end cap O and take off the cap.

9.19 The feed pins may now be removed, one at a time or as required. Make a careful note of their method of assembly, particularly with regard to the way the feed pin springs J are fitted.

## 10. ANSWER-BACK UNIT

10.1 Disconnect spring BB, Fig.7.36, from its anchor on the release lever trip arm BA.

10.2 Remove the two circlips securing the 'Here Is' trip bellcrank BD and the release lever trip arm BA, and take off the bellcrank and trip arm.

10.3 Disconnect the release lever spring AX. Remove the rear circlip connecting the release lever spindle AY and withdraw the spindle towards the front of the unit.

10.4 Disconnect the latch trip lever spring AR, ratchet retention pawl spring AL and release lever catch spring AU. Remove the circlip which is located against the inner surface of the release pawl latch AN.

10.5 Withdraw the selector levers spindle X towards the front of the unit, releasing the latch AN and its torsion spring AO, ratchet retention pawl AK, and selector levers AH and their spacing collars AJ.

10.6 Remove the two screws securing the ward drum spindle support C and take off the support.

10.7 Slip the suppressor link AE off its lower retaining pin and remove the ward drum L.

10.8 Remove the circlip securing the lag disc release pawl AM and take off the pawl.

10.9 Remove the circlip securing the ward drum sleeve K and carefully take off the sleeve, lag disc spring J and lag disc F, noting any shims against the disc.

10.10 Discard all circlips removed.

## 11. REPERFORATING ATTACHMENT

11.1 Slacken the two screws securing the cuttings chute DM, Fig.7.40, and remove the chute.

11.2 Remove the two screws securing the tape guide DH and the retention lever bracket CH, and take off the guide and bracket.

11.3 Disconnect the punching arm spring AQ from its anchor pin on the support bracket A. Remove the two screws securing the punch block assembly to the unit casting. The punch block assembly may now be eased off the main assembly.

11.4 With the exception of the punch block head, any further dismantling of the unit will be obvious and should present no complications.

To Dismantle the Punch Block Head

11.5 Remove the two screws securing the punch cover plate and take off:-

(a) The cover plate.

(b) Two die plates.

(c) Tape guide plate.

(d) Four die plates.

(e) The five code punches and the feed hole punch.

11.6 Turn the punch block over and remove the two screws which secure the four bottom guide plates. Take off the plates.

# D. TO REASSEMBLE INDIVIDUAL UNITS

## 1. KEYBOARD

1.1 Reassemble the combination bar unit to the main frame. Refit the two clamp plates Q, Fig.7.32, (one at each end) and secure them with their screws.

1.2 Slide the four dowel clips EJ, Fig.7.34, so that they engage the keyboard front plate E, Fig.7.32, and tighten the clips with their screws.

1.3 Refit the push rod assembly, ensuring that the slot cut in each push rod FT, Fig.7.34, faces the answer-back unit, and tighten the side screws securing the clamp plates FU to the push rod top rack FS.

1.4 Before reassembling the keyboard mask as described in paragraph 1.5 below, carry out Adjustment Nos.20 – 22 (Part 4, pages 14-16).

1.5 Refit the keyboard mask E, Fig.7.1, to the unit frame and secure the mask with its four screws (two at each end).

## 2. MOTOR UNIT

★ To reassemble the motor unit, the following special tools will be required.

(a) Hide hammer or wooden mallet.

(b) Cranked hexagonal wrench, 1/16 in. (1.6 mm) across the flats.

(c) Piece of soft metal tube about 3 in. (76.2 mm) long, 3/4 in. (19 mm) maximum diameter and with a bore of 3/8 in. (9.5 mm).

(d) Piece of hard metal tube not less than 1 in. (25.4 mm) long, about 15/16 in. (23.8 mm) diameter and with a bore of approximately 3/4 in. (19 mm).

(e) A 3 in. (76.2 mm) length of 6BA threaded rod.

2.1 Refit the fan end thrust collar B, Fig.7.26, to the motor shaft. Smear a thin film of Creed No.4 lubricant over both sides of a new gasket and over that side of the fan end bearing clamp plate C which will be against its bearing E. Refit the plate and gasket to the shaft.

2.2 Fit the fan end bearing E on to the shaft and slip the soft metal tube over the shaft, holding it in contact with the inner race of the bearing. Tap the end of the tube until the bearing is seated fully against its thrust collar B.

2.3 Assemble the bearing retaining washer H to the shaft. Press the washer against its bearing and tighten the two special screws J with the hexagonal wrench.

2.4 Pass the end of the threaded rod through the assembled gasket and screw it a few turns into one of the threaded holes in clamp plate C.

2.5 Smear a thin film of No.4 lubricant on the inner face of the bearing housing in the fan end cover U. Pass the threaded rod through one of the screw channels in the cover and then press the cover on to the bearing.

2.6 Smear a thin film of No.4 lubricant on both sides of a new gasket and on the inner face of the fan end bearing cap G. Place the special washer K on the bearing. Assemble the new gasket and the bearing cap to the cover U, passing the threaded rod through one of the holes in both the gasket and the cap.

2.7 Holding the armature L fan end upwards, insert one of the bearing cap securing screws through a free hole in the cap and pass it through the cover U. With the threaded rod, draw the bearing clamp plate C up against the cover and pick up one of the plate screw holes with the cap securing screw just inserted. Turn the screw finger tight.

2.8 Insert a second bearing cap securing screw through to the clamp and pick up a second screw hole. Remove the length of threaded rod and insert the third bearing cap screw in its place. Tighten both screws finger tight only.

2.9 Refit the commutator end thrust collar B to the shaft. Smear a thin film of No.4 lubricant over both sides of a new gasket and over that side of the commutator end bearing clamp plate C which will be against its bearing E. Refit the plate and gasket to the shaft.

2.10 Fit the commutator end bearing E on to the shaft and position the soft metal tube against the bearing inner race. Tap the bearing until it is hard up against its thrust collar B.

2.11 Refit the brush mounting plate N to the commutator end cover M. Ensure that the position of the scribed line on the plate is correct with respect to the cover, and then secure the plate with the two special screws P.

2.12 Pass the threaded rod through the assembled gasket and screw it into one of the holes in clamp plate C.

2.13 Refit the commutator end cover M to the motor body and secure it with its four screws.

2.14 To enable the commutator end bearing to be re-housed in cover M, it will be necessary to heat the cover as follows.

(a) Fit the hard metal tube over the bit of a 60W soldering iron.

(b) Insert the tube and iron into the bearing housing in the cover.

(c) Allow the housing to heat up for approximately ten minutes and then remove the tube and iron.

2.15 Immediately pass the armature assembly through the motor body, passing the threaded rod through one of the screw channels in the commutator end cover, and ease the commutator end bearing E into its housing. It may be necessary to tap the fan end of the shaft to drive the bearing fully home.

2.16 Using the length of threaded rod, secure the commutator end bearing clamp place C and bearing cap F by the same method as described in paragraphs 2.7 and 2.8 above.

2.17 Fully tighten the six screws securing bearing caps F and G, and check that the armature now rotates freely. If not, lightly tap each end of the shaft with the mallet and re-check. If the armature is still not free, ease off the six bearing cap screws and secure free rotation by tapping the shaft ends, then tighten the screws again.

2.18 Re-connect the two brush boxes V to their leads and slide the boxes on to their mounting plate N. Position the boxes so that there is a clearance of .010 - .015 in. between the inner surface of each box and the surface of the commutator. When this condition is satisfied, tighten the four brush box securing screws. Refit the brushes X.

2.19 Refit the brush box cover A and secure it with its screw.

2.20 Press the parallel pin that keys the motor pinion D, Fig.7.22, back through the shaft. Refit the motor pinion to the shaft and secure it with its screw.

2.21 Fit the governor unit AP, Fig.7.26, to the motor shaft and clamp it firmly with its screw.

2.22 Refit the motor to its base Y and secure it friction tight with its four screws.

2.23 Fit the contact peg Q, Fig.7.27, into the governor boss, refit the governor contacts assembly AQ, Fig.7.26, and secure it with its screw.

2.24 Check that the motor is correctly positioned with respect to its base Y, as follows.

(a) Refit the motor, together with its base, to the machine main base, ensuring that the abutment screws on the motor base are in contact with the two abutment pins on the machine main base.

(b) Check that the motor pinion and selector unit driven gear mesh and can turn freely. If not, alter the position of the motor on its base until the condition is achieved.

(c) Remove the complete motor unit from the machine main base and fully tighten the four screws securing the motor to its base.

## 3. RIBBON UNIT

3.1 Assemble the main unit shaft O, Fig.7.25, to the left-hand side plate M. Refit the left-hand ratchet coupling V and fit a new circlip into the left-hand groove in the shaft.

3.2 Assemble the ratchet W, ensuring that it is fitted the correct way round with respect to the feed and retention pawls AA and AF. Ensure also that the pin on the feed change lever AK is engaged with the slot in the ratchet. Fit a new circlip into the right-hand groove in the shaft and then assemble the right-hand ratchet coupling V.

3.3 Refit the right-hand side plate L and secure it with its screws.

3.4 Assemble the two damping washers P and spool drive plates Q to the shaft.

3.5 Assemble the two compression springs S, together with any shims that were previously removed, and secure them to the shaft with nuts T and special end nuts U.

3.6 Assemble the ribbon jumper AP and refit the two roller pivots AW, ribbon rollers AY, tape retainers AZ, spool retainers BB, bushes BC and special nuts BD.

★ If the machine is fitted with two-colour printing mechanism, fit a new lubricating felt to the pin on the ribbon jumper and re-connect the lift link BG to the pin with a new circlip.

3.7 Assemble the two ribbon spools and slide the unit back on to its trackrails.

3.8 Refit the left-hand trackrail bracket A and secure it with its two nuts.

## 4. TYPEHEAD CARRIAGE UNIT

4.1 Assemble the typehead spindle AH, Fig.7.23, to the bevel gear AR, refitting any shims that may have been present between the gear and the unit casting, and secure the gear and spindle with the taper pin.

4.2 Assemble the bevel gear AS and the gear retainer AU, together with the two spacing collars. Secure the retainer with its screw.

4.3 Refit the backing plate BH and secure it with its special screw BK.

4.4 Refit the corrector bellcrank AX and secure it with its special screw AY.

4.5 Assemble the collar BA, corrector lever AZ and eccentric BB. Ensure that the corrector lever is in the centre of its adjustment range and then secure the eccentric with its screw. Re-connect the corrector lever spring BC.

4.6 Assemble a new lubricating collar H, together with its retainer J, and secure the retainer to the typehead casting with its screw.

4.7 Refit the carriage return lever CJ, together with its retainers CG, and secure the retainers with their two screws.

4.8 Refit the pawl support plate BX and secure it with its two screws.

4.9 Re-connect the feed and retention pawl springs CB.

4.10 Assemble the typehead carriage assembly AF to the splined shafts V, as follows.

(a) Position the splined shafts so that the hole in the collar at the end of each shaft is vertical.

(b) Depress the typehead boss AL as far as it will go and turn it so that the letter 'X' is facing the rear of the unit.

(c) Maintaining these conditions, engage the typehead carriage with the splined shafts.

4.11 Refit the end plate E, together with the carriage return splined shaft S and print rail R, as follows.

(a) Position the carriage return lever CJ so that it is horizontal.

(b) Hold the carriage return link arm U so that its operating pin is approximately mid-way between the rear splined shaft and the bearing on the end plate.

(c) Maintaining these conditions, engage the carriage return shaft with the typehead carriage.

(d) Assemble a new lubricating felt to the right-hand end of each splined shaft V and secure each shaft to the end plate with a new circlip.

4.12 Move the typehead carriage to its extreme right-hand position and secure the two guide rails F with their nuts. Secure the left-hand end of the print rail R with its screw. Check that the carriage will now move freely on its rails.

4.13 Refit the feed and retention racks M and K, and secure them with their two screws (one at each end).

4.14 Assemble bush AK and a new lubricating strip AJ to the typehead sleeve AG. Refit the typehead and its sleeve, as follows.

(a) Ensure that the corrector lever AZ is still in the centre of its adjustment range, and engage it fully with the corrector wheel AO.

(b) Fit the typehead sleeve to the typehead spindle so that, looking at the unit in plan, the face of the type on the typehead boss at the print-out point is parallel to the carriage return splined shaft S.

(c) Secure the typehead with its small nut.

4.15 Refit the lifting link BL, together with lifting block BO. Refit special washer BT and rollers BQ, together with any shims that may have been fitted. Refit the two shouldered screws BR and re-connect the lifting link spring BV.

4.16 Refit the carriage return manual lever T and secure it with its screw.

4.17 After reassembly, check the vertical movement of the typehead to ensure that there are no tight spots in any radial position. Spin the typehead and check that there is no friction in the rotating movement.

## 5. END-OF-LINE INDICATOR AND CARRIAGE RETURN SPRING DRUM

5.1 Before reassembly, lubricate the spring Q, Fig.7.24, and spring anchor R with Creed No.4 lubricant.

5.2 Ensure that the spring anchor is engaged with the hook on the end of the spring and refit the spring inside the inner drum P.

5.3 Assemble the spring drum pivot O to the outer drum S. Ensure that the inner end of the spring anchor is engaged with the slot in the pivot and refit the inner drum, together with the spring, to the outer drum. Hold the outer drum and turn the inner drum clockwise with a pair of snipe-nosed pliers to engage the bayonet-type connexion between the two drums.

5.4 Refit the cam U and secure it with its three screws.

5.5 Refit the end-of-line indicator bracket A, together with the end-of-line indicator mechanism, to the spring drum assembly and secure both units with the nut underneath the spring drum.

## 6. SELECTOR UNIT

6.1 Press the clutch trigger BU, Fig.7.20, against its backstop in the clutch frame BT and refit the clutch body BQ and camshaft BO to the cam assembly and clutch bands CD.

6.2 Ensure that the shoulder on the collar CH lies against the central channel of the ballrace CJ, then refit both collar and ballrace to the unit casting A, Fig.7.19, tapping them securely home with the wooden dowel rod. Do not tighten the two grub screws in the collar until the camshaft gear CN, Fig.7.20, has been fitted.

6.3 Align the three holes in the shouldered bush B, Fig.7.19, with those in the casting. Refit the bush to the casting and tap it fully home, then insert and tighten the three bush securing screws.

6.4 Assemble the orientation casting BE, Fig.7.20, to the bush, ensuring that the knurled head screw BL engages the clamp shoe BM. Tighten screw BL. Refit the spring washer BN and secure it with its three screws.

6.5 Refit the camshaft thrust plate CL to the unit casting and secure it with its three screws.

6.6 Assemble the spacing collar CG to the rear end of the camshaft BO. Refit the camshaft, complete with its cam assembly and clutch drum, to the unit casting and tap it fully home in its seating. Re-connect the retention lever spring CY to its anchor pin on the orientation casting.

6.7 Refit the striker lever CR and retention locking lever CP on their common pivot, together with any shims that were present, and secure the levers with special screw CT.

6.8 Refit the rockshaft bearing bracket P, Fig.7.19, and tripshaft bearing bracket AE, together with the tripshaft AF. Secure the brackets with their five screws to the unit casting, ensuring that the tripshaft moves freely both before and after tightening the screws.

6.9 Assemble the spring anchor strip AW and refit the guide plate AY to the unit casting. Ensure that the strip does not bind in the slot in the guide plate when the plate screws are tightened.

6.10 Assemble the starter main plate D, Fig.7.21, together with the starter switch mechanism, to the unit casting and secure it with its two screws. Ensure that the retention arm, Fig.7.20, is correctly positioned with respect to the striker lever CR.

6.11 Re-connect the retention locking lever spring CQ to its anchor on the starter mounting bracket C, Fig.7.21.

6.12 Pull the spring anchor strip AW, Fig.7.19, as far forward as it will go and refit the compression spring EC, Fig.7.21, together with its two shouldered brushes EB. Refit the bias adjustment screw EA and turn it clockwise until it is engaged. Assemble the bias adjustment clamp DZ and secure it with its screw.

6.13 Refit the send-receive delay lever EL, together with the two break-in levers EQ and ER.

6.14 Refit the rockshaft S, Fig.7.19, together with its stop arm Q, to its right-hand bearing bracket P. Refit the rockshaft into its left-hand bearing bracket AC. Ensure that the spring anchor strip AW is correctly engaged in the slot in the bracket, and then secure the bracket with its two screws. Tighten the rockshaft stop arm screw.

6.15 Assemble the drive shaft J. Refit the drive shaft bearing block G to the unit casting and secure it with its two screws.

6.16 Refit the special washer CK, Fig.7.20, ball thrust bearing CM and camshaft gear CN. Assemble the camshaft gear clamp CO and secure it with its two screws. Locate the hole in the unit casting and turn the camshaft until the grub screw in the collar AH can be seen. Hold the collar to the rear against its associated ballrace to take up any end-play in the shaft and tighten the screw. Turn the camshaft through 180° and repeat this operation for the second screw.

6.17 Refit the driven gear C, Fig.7.22, to the drive shaft J, Fig.7.19, and secure it with its screw AZ.

## 7. FUNCTION BAR UNIT

7.1 Refit each function bar in turn, ensuring that they are reassembled in their correct positions. Refit the two retaining plates T, Fig.7.18, and secure them with their two screws.

7.2 Re-connect each function bar spring to its associated function bar.

7.3 Refit the Bell and WRU? lever pivot bracket Y and secure it with its two screws.

## 8. TRANSLATOR UNIT

To Reassemble the Traverse Shaft

8.1 Assemble the pin resetting frame BE, Fig.7.15, to the selector traverse shaft AK, ensuring that the frame cam roller AY is aligned with the retention and

pin reset cam BX. Refit the retaining bush BE and secure it with its screw, ensuring that the frame is free to rotate about the traverse shaft with a minimum of end-play. Take care not to position the retaining bush screw so that it fouls the resetting frame. Tap the pin back into its housing in the rear end of the traverse shaft.

8.2 Refit the traverse cam AR and the camshaft assembly, ensuring that the cam is assembled in such a way that its two red spots will face the front of the machine.

To Reassemble the Main Camshaft

★ Before reassembling the rear bearing block DP, remove the screw securing the two retaining plates DQ and DR, and take off the plates. Remove the ballrace DL and clean it thoroughly in white spirit. Allow the race to dry off and then repack with Creed No. 4 lubricant. Reassemble the ballrace and its retaining plates to the bearing block and secure the plates with their screws.

8.3 Refit the rear bearing block DP, together with its ballrace DL and two retaining plates DQ and DR, to the main camshaft.

8.4 Assemble the components to the main camshaft in the following sequence. Note that the cams must be reassembled in such a way that their identification letters will face the front of the machine.

Cam spacer DK
Key DJ
Lag weight cam (A)DH
Bush DG
Key DF
Two shims
Line feed cam (B)DE
Cam spacer DD and shim
Carriage return cam (C)DC
Cam spacer DB
Letter feed cam (D)DA
Cam spacer CZ and shim
Print cam (E)CY
Cam spacer CX
Transmitter cam - Stop - (F)CW
Cam spacer BZ
Function reset cam (G)CV
Cam spacer CU and shim
Pecker operating cam (GA)CT
Cam spacer CS
Type rotation cam (K)CG
Cam spacer CR
Transmitter cam - Start - (I)CQ

★ Before reassembling the middle bearing block BO, clean the roller assembly thoroughly in white spirit.

8.5 Assemble the middle bearing block BO to the main camshaft as follows.

(a) Stand the camshaft on its rear end.

(b) Coat one face of one of the special washers CP with Creed No. 4 lubricant and assemble the washer to the shaft, lubricated face upwards.

(c) Coat the centre race with the same lubricant and assemble it to the shaft.

(d) Coat the inside of the bearing housing in the bearing block with the same lubricant and assemble the block, holding it centrally disposed about the race.

(e) Using a pair of tweezers, insert the rollers vertically so that they are retained by the lubricant.

(f) Coat one face of the remaining special washer with the same lubricant and assemble it to the shaft, lubricated face downwards.

(g) Assemble key CN to retain the roller assembly on the shaft. Note that the bearing block is not retained by the key.

8.6 Continue assembling the components to the main camshaft in the following sequence.

Selector plate lift cam (J)CC
Cam spacer CM
Shims BY
Type rotation cam (K)CG
Cam spacer BZ
Transmitter cam No.1 (L)CL
Cam spacer BZ
Type lift and shift cam (M)CK
Cam spacer BZ and shim
Transmitter cam No.2 (N)CJ
Cam spacer BZ
Type rotation cam (K)CG
Cam spacer BZ
Transmitter cam No.3 (O)CH
Cam spacer BZ
Type rotation cam (K)CG
Cam spacer BZ and shim
Transmitter cam No.4 (P)CF
Cam spacer BZ
Type rotation cam (Q)CE
Cam spacer BZ and shim
Transmitter cam No.5 (R)CD
Cam spacer BZ
Selector plate lift cam (J)CC
Cam spacer CB and shim
Print and feed control cam (S)CA
Cam spacer BZ
Shims BY
Retention and pin reset cam (T)BX
Bush BW
Special washer BV
Key BU
Traverse drive gear BT
Cam spacer BS
Answer-back cam (U)BR
Bush BQ

★ Before reassembling the front camshaft bearing block AJ, tap out the ballrace BP and clean the race thoroughly in white spirit. Allow the race to dry off and then repack with Creed No.4 lubricant. Reassemble the ballrace to its housing in the block and tap it securely home.

8.7 Ensure that the single red spot on the traverse drive gear BT is positioned between the two red spots on the traverse cam AR and then assemble the front camshaft bearing block AJ, complete with its ballrace BP, to the main and traverse camshafts.

8.8 Refit the bush BN, washer BL, key BO, compensator cam (VA)BM, cam spacer BK and the keyboard reset cam (W)BJ to the main camshaft and secure them with their washer, spring washer and nut.

8.9 Assemble the special washer AO and compensator lever AL to the selector traverse shaft AK. Turn the traverse cam thrust washer AQ against the traverse cam AR so that the cam is free to rotate but is without end-play. When this condition has been obtained, hold the thrust washer by its flats with a spanner to retain it in this position and then refit and tighten the special nut AN.

To Reassemble the Vertical Levers and Cam Assemblies

8.10 Refit the carriage return and line feed rack AR, Fig.7.17, together with its associated lever assembly, and secure the rack with its two screws.

8.11 Assemble the traverse rear bearing X, Fig.7.15, together with the traverse shaft Y, and secure the bearing with its three short screws only.

8.12 Mount the camshaft assembly on the base plate and secure the rear bearing block DP, middle bearing block DO and front camshaft bearing block AD with their six screws.

8.13 Refit traverse shaft Y to its bearing on the middle main frame F, Fig.7.16, and secure the frame to the base plate with its two screws.

8.14 Assemble the print adjustment rod CC, Fig.7.17, through the base plate.

8.15 Refit the striker shaft N, Fig.7.15, to the front strike bearing M and secure the shaft to the pecker frame O with its two special screws U.

8.16 Assemble the rear strike bearing M and secure it with its two screws.

8.17 Assemble the vertical lever rack support AA, Fig.7.17, together with the vertical lever rack Z. Refit the support to the rear bearing and secure it with its two screws. Secure the support to the shift and function reset rack T, Fig.7.16, with its screw.

To Reassemble the Selector Assembly

8.18 Refit the selector lever pivot BL, together with the print release lever BO, and each selector and transmitter lever in the order noted when they were dismantled.

8.19 Refit the selector plate rack support H, together with the selector lever rack CJ, and secure the support with its two screws to the middle main frame F.

8.20 Refit the print control shaft BB, ensuring that the print hook BD is hanging downwards, and secure the shaft with a new circlip. Ensure that the slot on the print release pivot arm BJ is engaged with the pin on the print release lever BO and secure the arm with its screw to the print control shaft.

8.21 Refit the front main frame A and a new lubricator D. Ensure that the lubricator is located correctly under its cam, and secure the frame with its two screws. Refit the main plate stay G and secure it with its two nuts. Re-connect spring E to its anchor on lubricator D.

8.22 Refit the two bushes CN and bellcrank rack CM and secure the rack with its two screws.

8.23 Clamp the stop bracket CK in its lowest position and secure it with its two screws. Ensure that the end of spring E is anchored on the underside of the bracket. Re-connect the five springs CG connecting the transmitter cam followers CB to the stop bracket.

8.24 Secure the front ends of the print control shaft BB and selector lever pivot BL to the front main frame with a new circlip. Refit the frame support pin C to the frame and secure it with its nut.

8.25 Re-connect the traverse link AG, Fig.7.15, to the traverse bellcrank AW, Fig.7.16, and secure the link with a new circlip.

8.26 Re-connect the five springs CH to their respective selector code plates BS.

8.27 Locate the pin-box guide plate AU, together with the pin-box, against its abutments and secure the plate with its two screws.

8.28 Assemble the selector bars traverse plate AQ. Refit the front slide plate AO and secure it with its two screws.

8.29 Locate the traverse lever pivot bracket AD against its abutments and secure it with its two screws.

8.30 Refit the shouldered pin AT and traverse control bracket AS, and secure the bracket to the front main frame with its two screws. Re-connect the traverse multiplying lever AN to the pin-box end block AC with a new circlip.

8.31 Refit the pivot bracket AM to the front main frame and secure it with its two screws.

8.32 Refit the rear frame A, Fig.7.17.

8.33 Refit the following items to the function lever pivot CL in the order noted when they were dismantled, and then refit the pivot to the rear frame and secure it with a new circlip.

Contact operating lever DZ
Line feed lever CK
Carriage return lever CH
Letter feed bellcrank CF
Letter feed lever CD
Print lever BT
Transmitter lever (Stop)
Function reset lever X
Shift bellcrank BL
Transmitter lever (Start)

★ Where applicable, ensure that the levers are located in their guides and that the cam followers are on the correct side of their cams.

8.34 Re-connect the abutment frame trip lever CS, together with its spring CT, and secure the lever to the rear frame with a new circlip.

8.35 Re-connect the two transmitter springs EK, the letter and line feed lever springs CE and the carriage return lever spring CJ. Re-connect the lag weight spring CU.

8.36 Refit the outer abutment frame CV, together with any washers that were removed, and tighten screw DF, ensuring that the frame is free on its shaft but with a minimum of end-play. Re-connect the abutment frame return spring DC.

8.37 Ensure that the spacing between the main frame is as follows.

Front to Middle - 1.865 - 1.875 in.
Rear to Middle - 2.219 in.

## 9. PLATEN UNIT

### Friction Feed

9.1 Refit the paper tension rod CD, Fig.7.30, and secure it with its pivot screws.

9.2 Assemble the platen E and the platen spindle P. Refit the platen knob coupling W to the spindle and secure the coupling with its two socket-headed screws. Tighten the two screws securing the platen feed ratchet Q.

9.3 Re-connect the paper tension rod spring CJ and the retention lever spring AW to their common anchor pin.

9.4 Refit the paper guide BN and secure it with its two screws.

9.5 Refit the pressure roller release lever AS and secure it with its screw.

9.6 Refit the ratchet feed support plate BC and secure it with its three screws.

9.7 Assemble the paper tube CC.

Sprocket Feed

9.8 If the feed pins H, Fig.7.30, were removed, refit them to the platen E as follows.

(a) Insert the straight end of one of the springs J through the inner hole of one of the feed pins. Note that the domed end of the pin always faces outwards.

(b) Fit the looped end of the spring round the feed pin and compress the two ends of the spring towards each other with a pair of tweezers.

(c) Insert the spring and feed pin into the platen and fit the pin into its housing. Slowly guide the spring loop over the pin housing and then release the tweezers.

(d) Push the pin far enough through its housing to expose the hole at its domed end. Pass an office pin through this hole to retain the pin in position while the remaining pins are assembled.

(e) Do not remove the office pins until the platen spindle is inserted and retained by the platen end cap O.

9.9 Refit the platen end cap O and secure it with its three screws.

9.10 Refit the platen retention wheel M and secure it with its three screws.

9.11 Assemble the platen spindle. Refit the ratchet feed support plate BC and secure it with its three screws.

9.12 Ensure that all the feed pins are fully retracted and then carefully slide the complete platen assembly through the right-hand side plate into its correct position.

9.13 Refit the platen sub-plate V and secure it with its three screws.

9.14 Refit the platen knob coupling W to the spindle and secure the coupling with its two socket-headed screws.

9.15 Re-connect the retention lever spring AW to its anchor pin.

9.16 Refit the pressure roller release lever AS and secure it with its screw.

9.17 Refit the distance collar U and the feed change lever S, and secure them with the shouldered screw T.

## 10. ANSWER-BACK UNIT

10.1 Assemble the lag disc F, Fig.7.36, together with any shims that were removed, lag disc spring J and ward drum sleeve K. Secure the sleeve with a new circlip.

10.2 Refit the lag disc release pawl M and secure it with a new circlip.

10.3 Assemble the ward drum L and slip the suppressor link AE on to its lower retaining pin.

10.4 Refit the ward drum spindle support C and secure it with its two screws.

10.5 Refit the selector levers spindle X slowly, assembling to it the release pawl latch AN with its torsion spring AO, ratchet retention pawl AK, and the selector levers AH and their spacing collars AJ. Fit a new circlip against the inner surface of the latch AN.

10.6 Re-connect the release lever catch spring AU, ratchet retention pawl spring AL and the latch trip lever spring AR.

10.7 Refit the release lever spindle AY and secure it with a new circlip. Re-connect the release lever spring AX.

10.8 Refit the release lever trip arm BA and the 'Here Is' trip bellcrank BD, and secure them with new circlips.

10.9 Re-connect spring BB to its anchor on the release lever trip arm.

## 11. REPERFORATING ATTACHMENT

To Reassemble the Punch Block Head

★ When assembling the guide and die plates, ensure that their cut-away corners are towards the feed wheel knob, Fig.7.40.

11.1 Refit the four bottom guide plates to the punch block casting AS and secure them with their two screws.

11.2 Assemble the following items to the punch block casting.

(a) The five code punches and the feed hole punch.
(b) Four die plates.
(c) Tape guide plate.
(d) Two die plates.
(e) The cover plate.

Secure the cover plate with its two screws.

11.3 Refit the punch block assembly and secure it with its two screws to the unit casting. Re-connect the punching arm spring AQ to its anchor pin on the support bracket A.

11.4 Refit the retention lever bracket CH and tape guide DH, and secure them with their two screws.

11.5 Assemble the cuttings chute DM and tighten its two screws.

★ After assembly, ensure that the chute is free to vibrate.

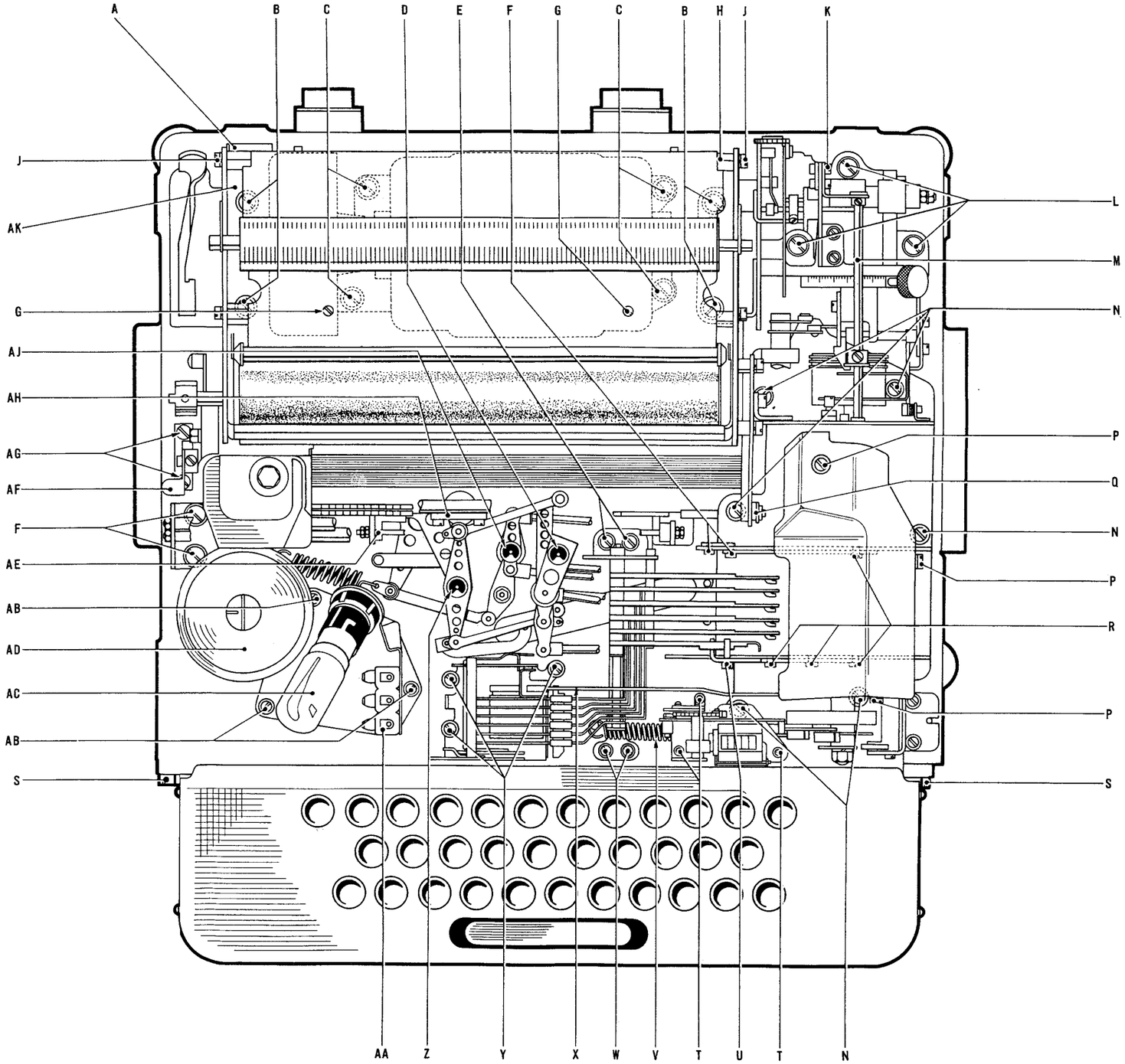


Fig. 5.1 LOCATION OF UNIT SECURING SCREWS

# PART 6

## CONTENTS


| | | Page |
|---|---|---|
| Appendix A | Imperial/Metric Conversion Table . . . . . | 1 |
| Appendix B | Lubricants . . . . . | 2 |
| Appendix C | Tools and Accessories . . . . . | 3 |
| Appendix D | Fault Location . . . . . | 7 |
| Appendix E | Loctite Sealant . . . . . | 26 |
| Appendix F | Glossary of Terms . . . . . | 28 |


♦ Appendices marked with this symbol apply only to special applications of the Model Seventy-five teleprinter and are not included in the standard equipment manual. They will, however, be obtainable on request.


| | |
|---|---|
| ♦ Appendix G | Synchronous Motor |
| ♦ Appendix H | Tape Reader Attachment |
| ♦ Appendix J | Silencing Cover |
| ♦ Appendix K | Parallel Input (5-wire) Version |
| ♦ Appendix L | Printing Reperforator Version |

# LIST OF ILLUSTRATIONS

Fig.6.1 Model Seventy-five Tools
Fig.6.2 Model Seventy-five Tools
Fig.6.3 Fault Localisation Table
Fig.6.4 Fault Localisation Chart

# APPENDIX A

## IMPERIAL/METRIC CONVERSION TABLE

| Inches | Millimetres |
|---|---|
| .001 | .025 |
| .002 | .051 |
| .003 | .076 |
| .004 | .102 |
| .005 | .127 |
| .006 | .152 |
| .007 | .178 |
| .008 | .203 |
| .009 | .229 |
| .010 | .254 |
| .011 | .279 |
| .012 | .305 |
| .013 | .330 |
| .014 | .356 |
| .015 | .381 |
| .016 | .406 |
| .017 | .432 |
| .018 | .457 |
| .019 | .483 |
| .020 | .508 |
| .021 | .533 |
| .022 | .559 |
| .023 | .584 |
| .024 | .610 |
| .025 | .635 |
| .026 | .660 |
| .027 | .686 |
| .028 | .711 |
| .029 | .737 |
| .030 | .762 |
| .031 | .787 |
| .032 | .813 |
| .033 | .838 |

| Inches | Millimetres |
|---|---|
| .034 | .864 |
| .035 | .889 |
| .036 | .914 |
| .037 | .940 |
| .038 | .965 |
| .039 | .991 |
| .040 | 1.02 |
| .041 | 1.04 |
| .042 | 1.07 |
| .043 | 1.09 |
| .044 | 1.12 |
| .045 | 1.14 |
| .046 | 1.17 |
| .047 | 1.19 |
| .048 | 1.22 |
| .049 | 1.24 |
| .050 | 1.27 |
| .051 | 1.30 |
| .052 | 1.32 |
| .053 | 1.35 |
| .054 | 1.37 |
| .055 | 1.40 |
| .056 | 1.42 |
| .057 | 1.45 |
| .058 | 1.47 |
| .059 | 1.50 |
| .060 | 1.52 |
| .061 | 1.55 |
| .062 | 1.58 |
| .063 | 1.60 |
| .064 | 1.63 |
| .065 | 1.65 |
| .066 | 1.68 |

| Inches | Millimetres |
|---|---|
| .067 | 1.70 |
| .068 | 1.73 |
| .069 | 1.75 |
| .070 | 1.78 |
| .071 | 1.80 |
| .072 | 1.83 |
| .073 | 1.85 |
| .074 | 1.88 |
| .075 | 1.90 |
| .076 | 1.93 |
| .077 | 1.95 |
| .078 | 1.98 |
| .079 | 2.00 |
| .080 | 2.03 |
| .081 | 2.06 |
| .082 | 2.08 |
| .083 | 2.11 |
| .084 | 2.13 |
| .085 | 2.16 |
| .086 | 2.18 |
| .087 | 2.21 |
| .088 | 2.23 |
| .089 | 2.26 |
| .090 | 2.29 |
| .091 | 2.31 |
| .092 | 2.34 |
| .093 | 2.36 |
| .094 | 2.39 |
| .095 | 2.41 |
| .096 | 2.44 |
| .097 | 2.46 |
| .098 | 2.49 |
| .099 | 2.51 |

# APPENDIX B

## LUBRICANTS

| Creed No. | Part No. | Supplied In. | Description | Equivalents |
|---|---|---|---|---|
| 1 | TA 1095 | ¼ pint tin | Thin oil - SAE 10 | Shell Clavus oil 17<br>Castrol Magna RS<br>G.P.O. oil No.12 |
| 2 | TA 1096 | ¼ pint tin | Medium oil - SAE 30 | Shell Talpa oil 30<br>Castrol XL<br>G.P.O. oil No.14 |
| 4 | TA 1097 | 2 oz. tin | Lithium base soft grease | AeroShell 6B<br>Castrol Spheerol AP.3 |
| 5 | TA 1098 | 2 oz. tin | Semi-fluid water-resistant grease | Shell Mytilus A<br>Castrol Impervia CL<br>Mobilgrease No.1 |
| 6 | TA 1317 | 2 oz. tube | High melting-point molybdenum disulphide grease | Rocol MT-LM |
| 7 | TA 1331 | 2 oz. tin | Lithium base soft grease | Shell Alvania No.1<br>Castrol Spheerol AP.1 |
| 8 | TA 1330 | ¼ pint tin | Thin oil - SAE 20 | Shell Tellus oil 33 |
| 9 | TA 1333 | ¼ pint tin | Thin oil - SAE 10 | Shell Tellus oil 29 |
| 10 | | | Thick oil - SAE 140 | Shell Omala 79<br>Mobilube GX140 |
| 11 | TA 1358 | ¼ pint tin | Thin oil + molybdenum disulphide | Rocol MO4 |

# APPENDIX C

## TOOLS AND ACCESSORIES

### 1. TOOLS

| Description | Quantity | Part No. | Reference |
|---|---|---|---|
| Spring Hook | 1 | TA 1008 | D, Fig.6.1 |
| Spring Hook | 1 | TA 1130 | A, Fig.6.1 |
| Tommy Pin - Medium | 1 | TA 1011 | E, Fig.6.2 |
| Tommy Pin - Small | 1 | TA 1020 | |
| Tommy Pin - Large | 1 | TA 1360 | |
| Spanner OBA - 2BA | 2 | TA 1039 | B, Fig.6.2 |
| Spanner 2BA | 1 | TA 1367 | A, Fig.6.2 |
| Spanner 4BA - 6BA | 2 | TA 1022 | B, Fig.6.2 |
| Spanner 8BA - 10BA | 2 | TA 1036 | |
| Box Spanner 2BA | 1 | TA 1375 | N, Fig.6.1 |
| Screwdriver 4 x 1/10 in. | 1 | TA 1053 | Q, Fig.6.1 |
| Screwdriver 5 x 5/32 in. | 1 | TA 1187 | S, Fig.6.1 |
| Screwdriver 5 x 1/4 in. | 1 | TA 1148 | P, Fig.6.1 |
| Autoplex Tension Gauge 0-4 lb | 1 | 1285/35 | R, Fig.6.1 |
| Autoplex Tension Gauge 0-12 oz | 1 | 1285/84 | |
| Allen key | 1 | 17504A | H, Fig.6.2 |
| Tweezers | 1 pair | 8199 | M, Fig.6.1 |
| Oilcan (For medium oil) | 1 | 8620 | E, Fig.6.1 |
| Oilcan -- (For thin oil) | 1 | 16771 | J, Fig.6.1 |
| Feeler Gauge .003 in. | 1 | TA 1344 | C, Fig.6.2 |
| Feeler Gauge .004 in. | 1 | TA 1345 | |
| Feeler Gauge .005 in. | 1 | TA 1346 | |
| Feeler Gauge .006 in. | 1 | TA 1347 | |
| Feeler Gauge .008 in. | 1 | TA 1348 | |
| Feeler Gauge .010 in. | 1 | TA 1349 | |
| Feeler Gauge .015 in. | 1 | TA 1350 | |
| Feeler Gauge .020 in. | 1 | TA 1351 | |
| Feeler Gauge .0625 in. | 1 | TA 1352 | |
| Feeler Gauge .005 in. | 1 | TA 1339 | G, Fig.6.2 |
| Feeler Gauge .010 in. Angled End | 1 | TA 1340 | K, Fig.6.2 |
| Feeler Gauge .032 in. Angled End | 1 | TA 1341 | D, Fig.6.2 |
| Feeler Gauge .045 in. Angled End | 1 | TA 1342 | |
| Feeler Gauge .045 in. Curved End | 1 | TA 1343 | F, Fig.6.2 |
| Slip Gauge .1250/.1094 in. | 1 | TA 1337 | J, Fig.6.2 |
| Slip Gauge .2187/.1562, .4375/.5000 in. | 1 | TA 1338 | |
| Circlip Applicator No.2 | 1 | TA 1373 | F, Fig.6.1 |
| Circlip Applicator No.3 | 1 | TA 1374 | |
| Spring Clip (For Transmitter machines only) | 1 | TA 1384 | M, Fig.6.2 |
| Contact Burnisher (For Transmitter machines only) | 1 | TA 1027 | L, Fig.6.2 |
| Contact Adjuster (For Transmitter machines only) | 1 | TA 1402 | K, Fig.6.1 |
| Timing Disc (For Transmitter machines only) | 1 | TA 1316 | B, Fig.6.1 |
| Stroboscope 140 dvs | 1 | TA 1117/140 | L, Fig.6.1 |
| Tape Pitch Gauge | 1 | TA 1385 | H, Fig.6.1 |
| Typehead Clamp | 1 | TA 1353 | C, Fig.6.1 |
| Lapping Block (For machines with Reperforating Attachment only) | 1 | TA 1301 | G, Fig.6.1 |

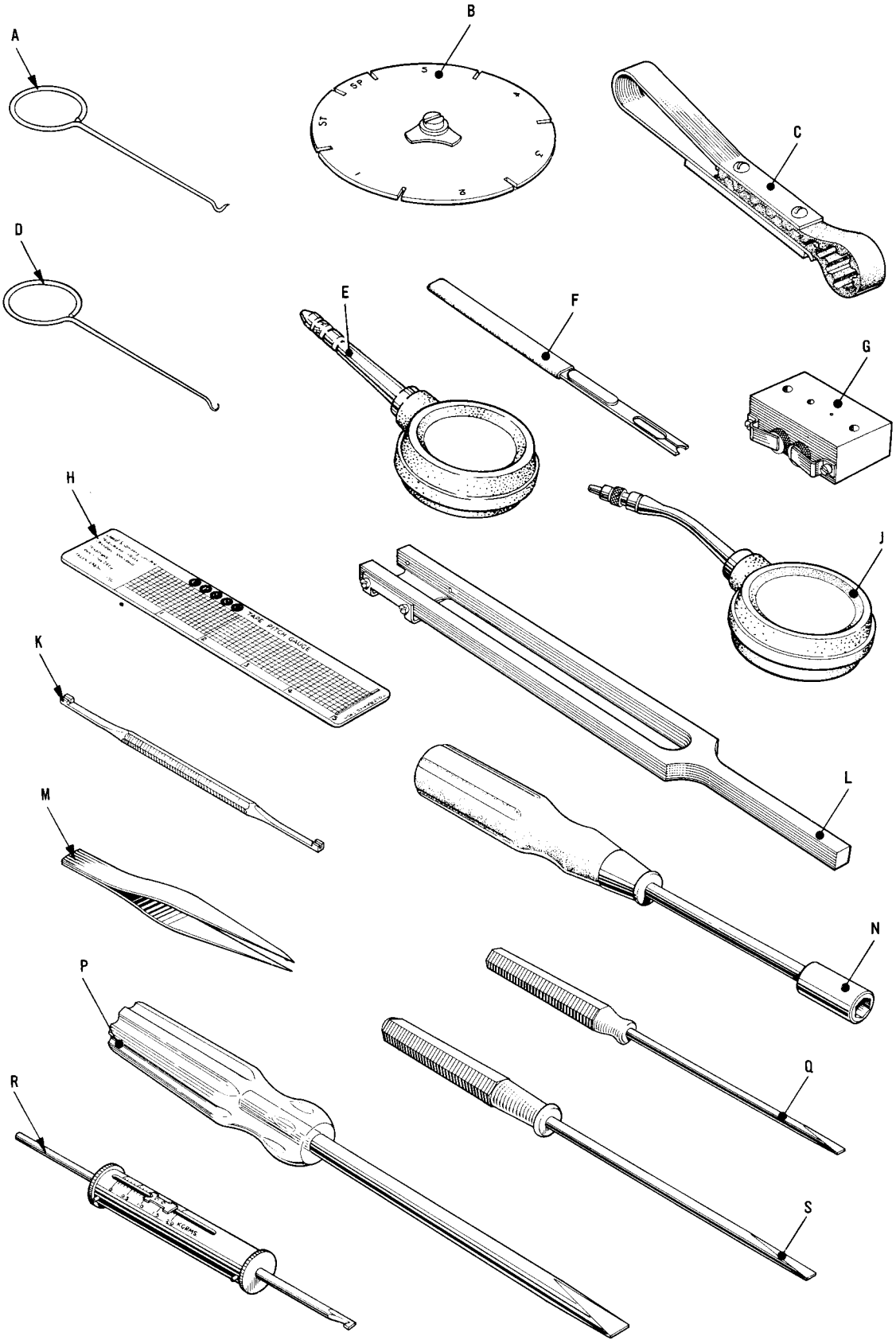


Fig. 6.1 MODEL SEVENTY—FIVE TOOLS

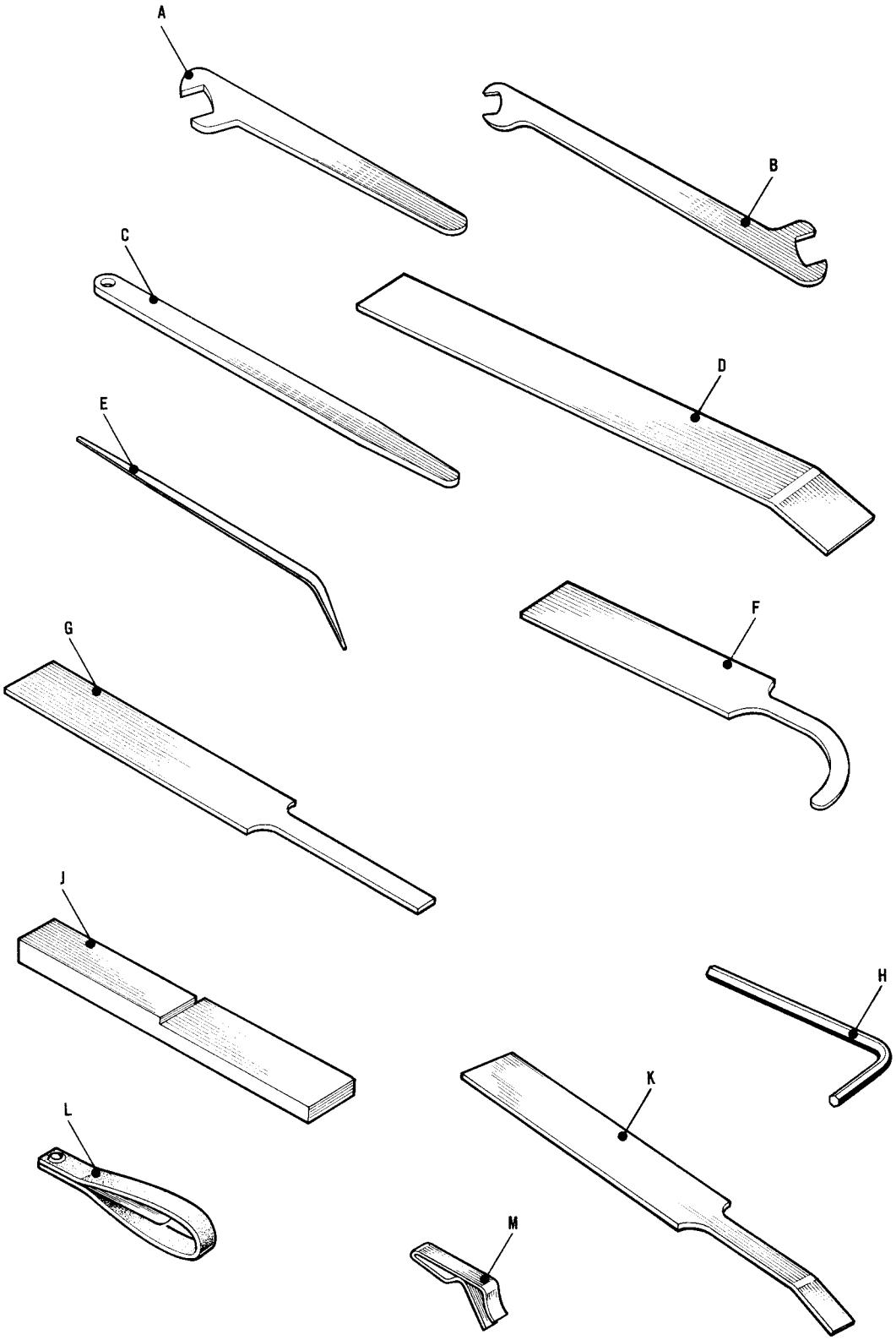


Fig. 6.2 MODEL SEVENTY—FIVE TOOLS

## 2. ACCESSORIES

| Description | Quantity | Part No. |
|---|---|---|
| Lubricant No.2 - ¼ pint tin | 1 | TA 1096 |
| Lubricant No.4 - 2 oz. tin | 1 | TA 1097 |
| Lubricant No.6 - 2 oz. tube | 1 | TA 1317 |
| Lubricant No.7 - 2 oz. tin | 1 | TA 1331 |
| Lubricant No.9 - ¼ pint tin | 1 | TA 1333 |
| Paper Roll, code word 'ABABY' | 1 | 8682 |
| Paper Tape Reel - 11/16 in. wide, code word 'ABAST' (For machines with Reperforating Attachment only) | 1 | 8184 |
| Copy of Typehead Chart | 1 | |
| Copy of Keyboard Chart | 1 | |
| Equipment Manual EM75 | 1 | |

# APPENDIX D

## FAULT LOCATION

### GENERAL

The efficient correction of faults depends upon a thorough knowledge of the principles of operation of the teleprinter and the type of circuit in which it is being used. Without this knowledge it may be possible to restore the machine temporarily to a working condition, but there will be no guarantee that it will continue to work satisfactorily for any length of time. This is because a fault may sometimes be cleared temporarily by adding a compensating maladjustment to the machine, e.g. bias in the incoming signals can be compensated by biasing the electromagnet. Such practises should be avoided because they have a cumulative effect on the serviceability of the teleprinter and, in time, any slight change in the circuit conditions or in the adjustment of the remainder of the machine will probably lead to a series of faults. The cause of the trouble should be systematically localised and, if adjustment is required, rectified by using the standard adjustments only.

Since a logical analysis of the fault symptoms is essential, wherever possible it is recommended that known test messages are used in conjunction with a second machine. Suitable test messages and their uses are given on page 18. If no other teleprinter is available and the machine is fitted with a keyboard and transmitter, the 'Self-test' method described in Part 2, page 3 may be used.

The Fault Localisation Table, Fig. 6.3, provides a systematic preliminary procedure for localising faults. This table is applicable to a simple point-to-point arrangement of two Model Seventy-five teleprinters but most of the procedure can be used, with very little alteration, for other arrangements.

| HOME STATION | | DISTANT STATION | | PROBABLE LOCATION OF FAULT |
|---|---|---|---|---|
| RECEPTION | LOCAL RECORD | RECEPTION | LOCAL RECORD | |
| Correct | Faulty | Faulty | Correct | Home keyboard or associated linkages |
| Faulty | Correct | Correct | Correct | (a) Home magnet or selector<br>(b) Distant transmitter<br>(c) No distant signalling power |
| Faulty | Faulty | Correct | Correct | Home translator and linkages or typehead |
| Faulty | Correct | Correct | Faulty | Distant keyboard or associated linkages |
| Correct | Correct | Faulty | Correct | (a) Distant magnet or selector<br>(b) Home transmitter<br>(c) No home signalling power |
| Correct | Correct | Faulty | Faulty | Distant translator and linkages or typehead |
| Faulty | Correct | Faulty | Correct | Line or line equipment |

Fig. 6.3 FAULT LOCALISATION TABLE

The majority of faults on the Model Seventy-five teleprinter will be found to be due to one or more of the following five causes.

- Maladjustment - cleared by local adjustment.
- Lack of lubrication - cleared either by lubricating or by cleaning and lubricating, possible necessitating local adjustment.
- Excess of dirt or foreign bodies - cleared by cleaning and lubricating, possibly necessitating local adjustment.
- Worn parts - cleared either by local adjustment, or by changing parts followed by local adjustment.
- Broken parts - cleared by changing parts followed by local adjustment.

The Fault Localisation Chart, Fig.6.4, and its associated text will act as an approximate guide to most general fault possibilities.

| Fig.6.4 Reference | Fault | Probable Cause | Rectification |
|---|---|---|---|
| | MOTOR | | |
| 1 | Motor will not start (Receive) | (a) Dirty or disconnected plug connexions | Clean or re-connect |
| | | (b) Starter switch operating link maladjusted | Adjustment No.37 |
| | | (c) Starter switch linkage stiff | Remove cause of stiffness |
| | | (d) Worn brushes | Renew |
| | | (e) Dirty commutator | Clean and polish |
| 2 | Motor will not start (Transmit) | (a) Dirty or disconnected plug connexions | Clean or re-connect |
| | | (b) Trip shaft maladjusted | Adjustment No.38 |
| | | (c) Starter switch linkage stiff | Remove cause of stiffness |
| | | (d) Worn brushes | Renew |
| | | (e) Dirty commutator | Clean and polish |
| 3 | Motor will not stop | (a) Incorrect engagement of starter switch spindle | Adjustment No.14 |
| | | (b) Starter switch hold-out lever maladjusted | Adjustment No.15 |
| | | (c) Starter switch hold-out bush maladjusted | Adjustment No.16 |
| | | (d) Trip shaft maladjusted | Adjustment No.38 |
| 4 | Motor speed incorrect | (a) Incorrect governor spring tension | Adjustment No.81 |
| | | (b) Governor contacts incorrectly set or damaged | Adjustment Nos.18 and 19 |
| | | (c) Variation in mains voltage | Adjust governor spring to suit |
| | | (d) Motor or governor components | See Fig.1.10 - Renew components if necessary |

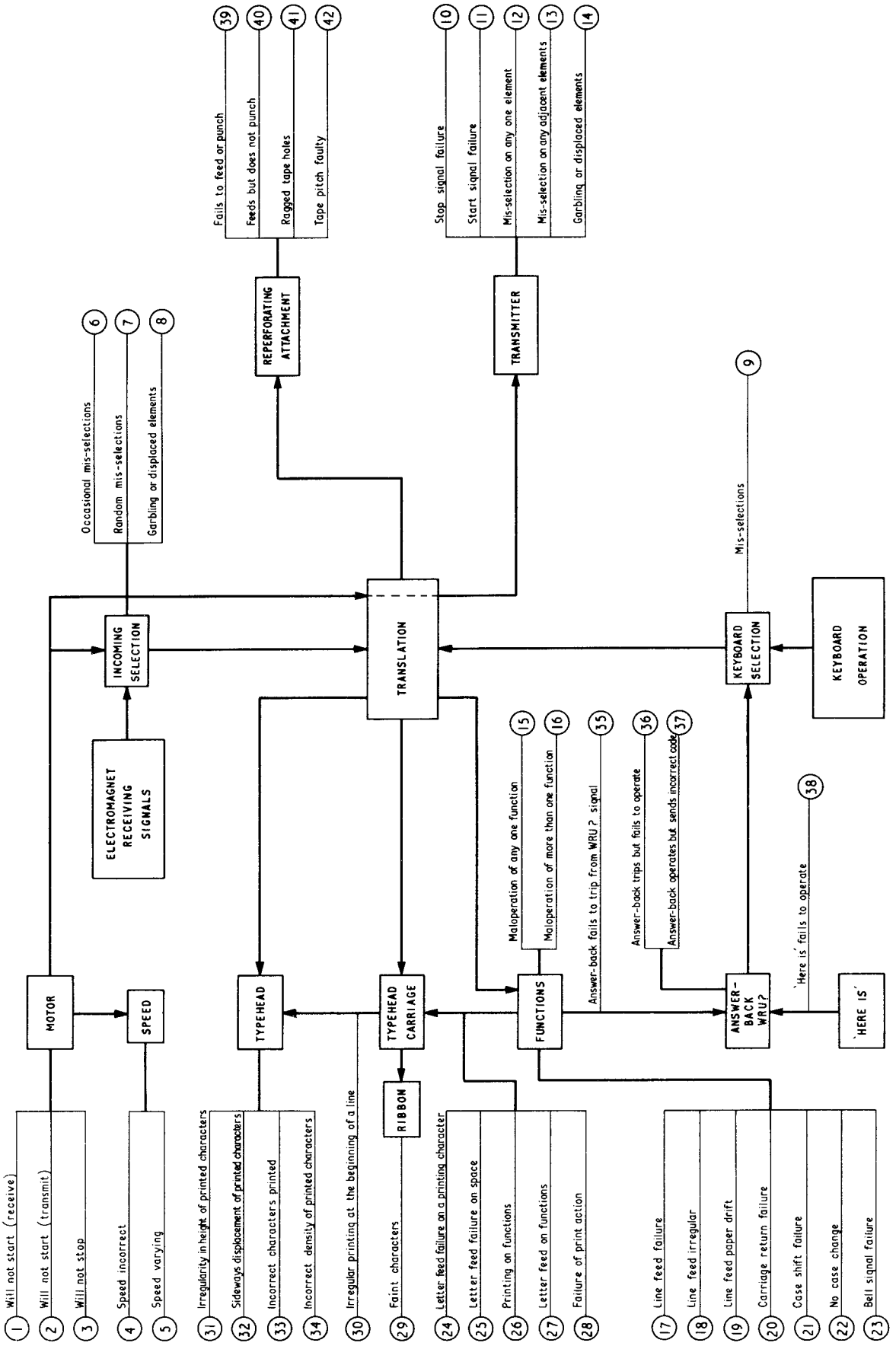


Fig. 6.4 FAULT LOCALISATION CHART

| Fig.6.4 Reference | Fault | Probable Cause | Rectification |
|---|---|---|---|
| 5 | Motor speed varying | (a) Governor contacts incorrectly set or damaged | Adjustment Nos. 18 and 19 |
| | | (b) Worn brushes | Renew |
| | | (c) Worn commutator | Skim and polish |
| | | (d) Faulty connexion in mains circuit | Repair connexion |
| | **RECEPTION** | | |
| 6 | Occasional mis-selections | (a) Pecker retention arm hook maladjusted | Adjustment No. 30 |
| | | (b) Incorrect pecker clearance | Adjustment No. 39 |
| | | (c) Pecker traverse maladjusted | Adjustment No. 40 |
| | | (d) Electromagnet/rockshaft linkage loose or jammed | Re-position linkage and tighten rockshaft operating arm screw |
| | | (e) Excessive play in pecker assembly | Renew worn parts |
| | | (f) Worn selection pins | Renew |
| | | (g) Weak pin springs | Renew |
| | | (h) Excessive side-play in selector camshaft | Renew bearings |
| 7 | Random mis-selections | (a) Motor speed incorrect | See paragraph 4 above |
| | | (b) Excessive bias on electromagnet | Adjustment No. 2 |
| | | (c) Pecker retention arm hook maladjusted | Adjustment No. 30 |
| | | (d) Rockshaft tight | Adjustment No. 34 |
| | | (e) Incorrect pecker clearance | Adjustment No. 39 |
| | | (f) Pecker traverse maladjusted | Adjustment No. 40 |
| | | (g) Pin-box endplate loose | Tighten |
| | | (h) Electromagnet/rockshaft linkage loose or jammed | Re-position linkage and tighten rockshaft operating arm screw |
| | | (j) Excessive play in pecker assembly | Renew worn parts |
| | | (k) Worn selection pins | Renew |
| | | (l) Weak pin springs | Renew |
| | | (m) Excessive side-play in selector camshaft | Renew bearings |

| Fig.6.4 Reference | Fault | Probable Cause | Rectification |
|---|---|---|---|
| 8 | Garbling or displaced elements | (a) Motor speed varying | See paragraph 5 above |
| | | (b) Incorrect translator clutch trigger backstop clearance | Adjustment No.3 |
| | | (c) Incorrect translator clutch abutment engagement | Adjustment No.4 |
| | | (d) Translator clutch maladjusted | Adjustment No.28 |
| | | (e) Incorrect selector detent clearance | Adjustment No.31 |
| | | (f) Excessive play in selector detent | Adjustment No.32 |
| | | (g) Selector clutch maladjusted | Adjustment No.33 |
| | | (h) Rockshaft tight | Adjustment No.34 |
| | | (j) Translator trip maladjusted | Adjustment No.36 |
| | | (k) Translator clutch abutment pivot dry | Lubricate |
| | | (l) Selector detent pivot dry | Lubricate |
| | | (m) Selector camshaft binding on drive spindle | Remove cause of binding |
| | | (n) Selector drive gear partially loose | Tighten |
| | | (p) Worn selector camshaft | Renew |
| | | (q) Worn selector detent | Renew |
| | | (r) Worn translator detent | Renew |
| | TRANSMISSION - LOCAL RECORD AND DISTANT STATION | | |
| 9 | Mis-selections | (a) Trip lever pivot incorrectly set | Adjustment Nos.21 and 70 |
| | | (b) Incorrect push rod lift | Adjustment No.22 |
| | | (c) Combination bar reset mechanism maladjusted | Adjustment No.69 |
| | | (d) Incorrect selector bar/selection pin alignment | Adjustment No.71 |

| Fig.6.4 Reference | Fault | Probable Cause | Rectification |
|---|---|---|---|
| | | (e) Incorrect selector bar/selection pin clearance | Adjustment No.72 |
| | | (f) Lag weight release lever maladjusted | Adjustment Nos.73 and 74 |
| | | (g) Keyboard combination bars stiff | Remove cause of stiffness |
| | | (h) Weak combination bar springs | Renew |
| | | (j) Keyboard push rods stiff | Remove cause of stiffness |
| | | (k) Keyboard selector bars stiff | Remove cause of stiffness |
| | | (l) Swarf between run out and trip bars | Clean |
| | | (m) Worn trip lever pivot | Renew |
| | | (n) Worn selection pins | Renew |
| | | (p) Weak pin springs | Renew |
| | TRANSMISSION - DISTANT STATION ONLY | | |
| 10 | Stop signal failure | (a) Incorrect setting of transmitter read-out contacts | Adjustment Nos.23 and 82 or 83 |
| | | (b) Send-receive switch contacts maladjusted | Adjustment No.78 |
| | | (c) Send-receive switch delay maladjusted | Adjustment No.79 |
| 11 | Start signal failure | (a) Incorrect setting of transmitter read-out contacts | Adjustment Nos.23 and 82 or 83 |
| | | (b) Send-receive switch contacts maladjusted | Adjustment No.78 |
| 12 | Mis-selection on any one element | (a) Incorrect setting of transmitter read-out contacts | Adjustment Nos.23 and 82 or 83 |
| | | (b) Incorrect setting of transmitter contacts | Adjustment No.82 or 83 |
| 13 | Mis-selection on any adjacent elements | (a) Incorrect setting of transmitter read-out contacts | Adjustment Nos.23 and 82 or 83 |
| 14 | Garbling or displaced elements | (a) Motor speed incorrect | See paragraph 4 above |
| | | (b) Transmitter levers stiff | Remove cause of stiffness |
| | | (c) Transmitter lever stop bracket displaced | Clamp bracket in its lowest position |

| Fig. 6.4 Reference | Fault | Probable Cause | Rectification |
|---|---|---|---|
| | FUNCTIONAL | | |
| 15 | Maloperation of any one function | (a) Function bar reset mechanism maladjusted | Adjustment No. 5 |
| | | (b) Print release lever maladjusted | Adjustment No. 6 |
| | | (c) Weak function bar operating spring | Renew |
| | | (d) Function bar stiff | Remove cause of stiffness |
| | | (e) Function bar unit incorrectly fitted | Refit unit correctly |
| 16 | Maloperation of more than one function | (a) Function bar reset mechanism maladjusted | Adjustment No. 5 |
| | | (b) Print release lever maladjusted | Adjustment No. 6 |
| | | (c) Function bar unit incorrectly fitted | Refit unit correctly |
| 17 | Line feed failure | (a) Line feed operating lever latch maladjusted | Adjustment No. 42 |
| | | (b) Weak line feed operating lever spring | Renew |
| | | (c) Maloperation of any one function | See paragraph 15 above |
| 18 | Line feed irregular | (a) Platen retention lever maladjusted | Adjustment No. 43 or 44 |
| | | (b) Line feed overthrow stop maladjusted | Adjustment No. 46 |
| | | (c) Platen pressure rollers too light | Adjust to increase pressure |
| 19 | Line feed paper drift | (a) Platen pressure rollers unequal | Adjust to equalise pressure |
| 20 | Carriage return failure | (a) Carriage return operating lever latch maladjusted | Adjustment No. 11 |
| | | (b) Insufficient carriage return pawl lift | Adjustment No. 41 |
| | | (c) Carriage return pawl latch maladjusted | Adjustment No. 41 |
| | | (d) Incorrect carriage return spring tension | Adjustment No. 52 |
| | | (e) Typehead carriage stiff | Remove cause of stiffness |
| | | (f) Weak carriage return operating lever latch spring | Renew |
| | | (g) Maloperation of any one function | See paragraph 15 above |

| Fig. 6.4 Reference | Fault | Probable Causes | Rectification |
|---|---|---|---|
| 21 | Case shift failure | (a) Shift bellcrank lever not centralised | Adjustment No. 8 |
| | | (b) Shift retainer stiff | Remove cause of stiffness |
| | | (c) Weak shift retainer spring | Renew |
| 22 | No case change | (a) Shift bellcrank lever not centralised | Adjustment No. 8 |
| | | (b) Shift retainer stiff | Remove cause of stiffness |
| | | (c) Maloperation of any one function | See paragraph 15 above |
| 23 | Bell signal failure | (a) Faulty contact spring settings | Adjustment No. 90 |
| | | (b) Function reset bar or switch arm maladjusted | Adjustment No. 90 |
| | | (c) Maloperation of any one function | See paragraph 15 above |
| 24 | Letter feed failure on a printing character | (a) Print release lever maladjusted | Adjustment No. 6 |
| | | (b) Letter feed operating lever latch maladjusted | Adjustment No. 10 |
| | | (c) Excessive typehead carriage end-play | Adjustment No. 48 |
| | | (d) Incorrect position of feed and retention pawls | Adjustment No. 51 |
| | | (e) Weak letter feed operating lever latch spring | Renew |
| | | (f) Worn pivot of feed and retention pawls | Renew |
| 25 | Letter feed failure on space | (a) Letter feed operating lever latch maladjusted | Adjustment No. 10 |
| | | (b) Maloperation of any one function | See paragraph 15 above |
| 26 | Printing on functions | (a) Print release lever maladjusted | Adjustment No. 6 |
| | | (b) Non-print hook maladjusted | Adjustment No. 9 |
| 27 | Letter feed on functions | (a) Print release lever maladjusted | Adjustment No. 6 |
| | | (b) Letter feed operating lever latch maladjusted | Adjustment No. 10 |
| | | (c) Weak letter feed operating lever latch spring | Renew |

| Fig.6.4 Reference | Fault | Probable Cause | Rectification |
|---|---|---|---|
| | | (d) Worn pivot of feed and retention pawls | Renew |
| 28 | Failure of print action | (a) Non-print hook maladjusted | Adjustment No.9 |
| | PRINTING | | |
| 29 | Faint characters | (a) Excessive typehead/ platen clearance | Adjustment No.55 |
| | | (b) Print beam stop screw maladjusted | Adjustment No.56 |
| | | (c) Ribbon feed failure | Adjustment No.67 |
| | | (d) Ribbon changeover failure | Clean and adjust changeover mechanism |
| 30 | Irregular printing at the beginning of a line | (a) Excessive typehead carriage end-play | Adjustment No.48 |
| | | (b) Incorrect position of retention pawl or pawl latch | Adjustment Nos.49 and 50 |
| | | (c) Incorrect carriage return spring tension | Adjustment No.52 |
| | | (d) Incorrect carriage return damping | Adjustment Nos.53 and 87 |
| 31 | Irregularity in height of printed characters | (a) Typehead rear splined shaft maladjusted | Adjustment No.59 |
| | | (b) Incorrect engagement of push rod/No.2 aggregate motion bellcrank | Adjustment No.64 |
| | | (c) Incorrect engagement of shift rod/shift bellcrank | Adjustment No.64 |
| | | (d) Typehead movement stiff | Remove cause of stiffness |
| | | (e) Weak typehead lift spring | Renew |
| | | (f) Worn typehead bushes | Renew |
| 32 | Sideways displacement of printed characters | (a) Eccentric pivot of typehead corrector maladjusted | Adjustment Nos.17 and 57 |
| | | (b) Corrector track rail height maladjusted | Adjustment No.58 |
| | | (c) Incorrect engagement of the push rods and the appropriate aggregate motion bellcrank | Adjustment Nos.60, 61, 62 or 63 |
| | | (d) Typehead rotary motion stiff | Remove cause of stiffness |

| Fig.6.4 Reference | Fault | Probable Cause | Rectification |
|---|---|---|---|
| | | (e) Weak aggregate motion spring | Renew |
| 33 | Incorrect characters printed | (a) Eccentric pivot of typehead corrector maladjusted | Adjustment Nos. 17 and 57 |
| | | (b) Incorrect engagement of the push rods and the appropriate aggregate motion bellcrank | Adjustment Nos. 60, 61, 62 or 63 |
| | | (c) Aggregate motion lever (usually No. 1) off its cam follower | Reset |
| 34 | Incorrect density of printed characters | (a) Print spring maladjusted | Adjustment No. 54 |
| | | (b) Incorrect typehead/ platen clearance | Adjustment No. 55 |
| | | (c) Print beam stop screw maladjusted | Adjustment No. 56 |
| | | (d) Corrector track rail height maladjusted | Adjustment No. 58 |
| | | (e) Ribbon worn in patches | Renew |
| | | (f) Worn platen | Renew |
| | ANSWER-BACK | | |
| 35 | Unit fails to trip from WRU? signal | (a) Lag disc spring unwound | Rewind spring |
| | | (b) Incorrect release lever lift | Adjustment No. 26 |
| | | (c) Lag weight release lever latch maladjusted | Adjustment No. 74 |
| | | (d) Vertical trip link maladjusted | Adjustment No. 107 |
| | | (e) Incorrect trip from function bar | Adjustment No. 108 |
| | | (f) Maloperation of any one function | See paragraph 15 above |
| 36 | Unit trips but fails to operate | (a) Incorrect release lever lift | Adjustment No. 26 |
| | | (b) Incorrect position of feed pawl | Adjustment No. 111 |
| | | (c) Feed pawl stop maladjusted | Adjustment No. 112 |
| | | (d) Weak lag disc spring | Renew |
| | | (e) Weak feed pawl spring | Renew |
| 37 | Unit operates but sends incorrect code | (a) Selector bar/selection pin maladjusted | Adjustment Nos. 71 and 72 |

| Fig.6.4 Reference | Fault | Probable Cause | Rectification |
|---|---|---|---|
| | | (b) Incorrect position of feed pawl | Adjustment No.111 |
| | | (c) Feed pawl stop maladjusted | Adjustment No.112 |
| 38 | 'Here Is' fails to operate | (a) Lag disc spring unwound | Rewind spring |
| | | (b) Incorrect release lever lift | Adjustment No.26 |
| | | (c) Lag weight release lever latch maladjusted | Adjustment No.74 |
| | | (d) 'Here Is' trip bell-crank maladjusted | Adjustment No.106 |
| | | (e) Incorrect position of feed pawl | Adjustment No.111 |
| | | (f) Feed pawl stop maladjusted | Adjustment No.112 |
| | REPERFORATING ATTACHMENT | | |
| 39 | Fails to feed or punch | (a) Incorrect position of interposer | Adjustment No.101 |
| | | (b) Worn fork driving plate | Renew |
| 40 | Feeds but does not punch | (a) Unit incorrectly fitted | Refit unit correctly |
| | | (b) Worn fork driving plate | Renew |
| 41 | Ragged tape holes | (a) Tape guide mal-adjusted | Adjustment No.102 |
| | | (b) Worn punches or die plates | Renew |
| 42 | Tape pitch faulty | (a) Tape guide mal-adjusted | Adjustment No.102 |
| | | (b) Incorrect feed hole pitch adjustment | Adjustment No.103 |

## TEST MESSAGES

Whenever possible it is recommended that known transmit or receive test messages are used in conjunction with a second machine as a guide to fault location. An example of each of these types of test message is given in Tables 1 and 2, together with an explanation of the code or mechanism which the particular line checks.

EEEEEEEEEEEEEEEEEEEEEEEEEEEEEEEEEEEEEEEEEEEEEEEEEEEEEEEEEEEEEEEEEEEEE

AAAAAAAAAAAAAAAAAAAAAAAAAAAAAAAAAAAAAAAAAAAAAAAAAAAAAAAAAAAAAAAAAAAAA

UUUUUUUUUUUUUUUUUUUUUUUUUUUUUUUUUUUUUUUUUUUUUUUUUUUUUUUUUUUUUUUUUUUUU

KKKKKKKKKKKKKKKKKKKKKKKKKKKKKKKKKKKKKKKKKKKKKKKKKKKKKKKKKKKKKKKKKKKKK

'LETTERS' REPEATED ON RUN-OUT.

VVVVVVVVVVVVVVVVVVVVVVVVVVVVVVVVVVVVVVVVVVVVVVVVVVVVVVVVVVVVVVVVVVVVV

MMMMMMMMMMMMMMMMMMMMMMMMMMMMMMMMMMMMMMMMMMMMMMMMMMMMMMMMMMMMMMMMMMMMM

OOOOOOOOOOOOOOOOOOOOOOOOOOOOOOOOOOOOOOOOOOOOOOOOOOOOOOOOOOOOOOOOOOOOO

TTTTTTTTTTTTTTTTTTTTTTTTTTTTTTTTTTTTTTTTTTTTTTTTTTTTTTTTTTTTTTTTTTTTT

S'S'S'S'S'S'S'S'S'S M.M.M.M.M.M.M.M.M.M

THE QUICK BROWN FOX JUMPS OVER THE LAZY DOG 1234567890

RYRYRY RYRYRY RYRYRY RYRYRY RYRYRY RYRYRY RYRYRY RYRYRY RYRYRY RYRYRY

Table I. TRANSMIT TEST MESSAGE

### Table I - Explanatory Notes

Line 1 checks code element No.1 (MSSSS)
Line 2 checks code element Nos.1 and 2 (MMSSS)
Line 3 checks code element Nos.1, 2 and 3 (MMMSS)
Line 4 checks code element Nos.1, 2, 3 and 4 (MMMMS)
Line 5 checks all five code elements (MMMMM)
Line 6 checks code element Nos.2, 3, 4 and 5 (SMMMM)
Line 7 checks code element Nos.3, 4 and 5 (SSMMM)
Line 8 checks code element Nos.4 and 5 (SSSMM)
Line 9 checks code element No.5 (SSSSM)
Line 10 checks the Figures/Letters case shift mechanism
Line 11 checks every individual letter and figure
Line 12 checks the operating limits of the mechanism by alternating 'R's (SMSMS) and 'Y's (MSMSM).

HAHBHCHDHEHFHGHIHJHKHLHMHNHOHPHQHRHSHTHUHVHWHXHYHZH

JJWWAAGGRRLLKKQQUUVVCCPPII BBDDZZEEOOTTXXFFYYSSMMNNHH

KXK8K£K KXK8K£K KXK8K£K KXK8K£K KXK8K£K KXK8K£K KXK8K£K

KQUVCPIJWAGRL (17=:082-@4) XFYSMNHBDZEOT /%6'.,£?+395

KQUVCPIJWAGRL (17=:082-@4) XFYSMNHBDZEOT /%6'.,£?+395

BHBHBHBHBHBHBHBHBHBHBHBHBHBHBHBHBHBHBHBHBHBHBHBHBHBHBHBHBHBH

?£?£?£?£?£?£?£?£?£?£?£?£?£?£?£?£?£?£?£?£?£?£?£?£?£?£?£?£?£?£?£?£?£?£

JIJIJIJIJIJIJIJIJIJIJIJIJIJIJIJIJIJIJIJIJIJIJIJIJIJIJIJIJIJIJIJIJIJIJIJI

88888888888888888888888888888888

JJJJJJJJJS'S'S'S'S'S'S'S

555555555555555555555555555555555555555555555555555555555555555555555555

RYRYRYRYRYRYRYRYRYRYRYRYRYRYRYRYRYRYRYRYRYRYRYRYRYRYRYRYRYRYRYRYRYRYRYRY

THE QUICK BROWN FOX JUMPS OVER THE LAZY DOG 1234567890.

* In the first two words each character is followed by Carriage Return, then each word is followed by Carriage Return and Letters, Space being used to come up to the correct word spacing.

Table 2. RECEIVE TEST MESSAGE

Table 2 - Explanatory Notes

Line 1 checks the overall printing mechanism. All characters should be level, equally spaced and printed squarely.
Line 2 checks the pin-box and pecker traverse mechanism.
Line 3 checks the vertical aggregate motion mechanism.
Lines 4 and 5 check the circular aggregate motion mechanism.
Lines 6, 7, 8 and 9 check the circular limits of the aggregate motion mechanism.
Line 10 checks the Figures/Letters case shift mechanism.
Line 11 checks the translator clutch mechanism.
Line 12 checks the distortion margin of the machine by means of the orientation device.
Line 13 checks the typehead carriage feed, carriage return and dashpot mechanism.

## FAULTY TEST MESSAGES

The most difficult types of fault to diagnose are printing faults due to the maloperation of the circular aggregate motion levers and their respective linkages, as the final position of any one type depends on a complex series of movements of one or more of the levers. Such faults may appear as a sideways displaced print-out of a character or even an adjacent type to the correct character.

A thorough knowledge of the principle of operation of the aggregate motion system and reference to a copy of the particular typehead chart will help in the location of printing

faults. For example, on the standard typehead, there is a greater chance of printing errors occurring on the letters 'T-L-R-O-G-I' (or their figure equivalents) in that order, than on other characters. This is because the positioning of these types depend on the movement of three circular aggregate motion levers, e.g. the letter 'T' or its figure equivalent is obtained by the largest total circular aggregate motion movement, i.e. levers 3,1 and 4, giving an 8 counter-clockwise movement set off against a 4 + 2 clockwise movement.

If the faulty test message does not provide enough information to determine exactly where the fault lies, lower the corrector track rail, Part 4 - Fig.4.50, by slackening the two track rail clamping screws 1/8 of a turn and screwing down the two shouldered pins as far as they will go. Re-run the text message. This procedure will isolate the typehead corrector mechanism from the printing action, thus the re-run copy will give a clearer indication where the aggregate motion levers are actually positioning the characters without reference to any correction which may have occurred in the original test message. If this procedure has to be adopted, restore the corrector track rail to its original position after the tests have been completed - Adjustment No.58 (Part 4, page 44) refers.

Examples of faulty test messages are given in Tables 3-8, together with explanations of the methods of analysing the faults and the recommended procedures for rectification.

HAHBHCHDHEHFHGHIHJHKHLHMHNHOHPHQHRHSHTHUHVHWHXHYHZH

JJWWAAGGRRLLKKQQUUVVCCPPII BBDDZZEEO ITTXXFFYYSSMMNNHH

KXK8K£K KXK8K£K KXK8K£K KXK8K£K KXK8K£K KXK8K£K KXK8K£K

KQUVCPIJWAGRL (17=:082→-4) XFYSMNHBDZEOT /%6'.,£?+3 5

KQUVCPIJWAGRL (17=:082-@4) XFYSMNHBDZEOT /%6'.,£?+395

BHBHBHBHBHBHBHBHBHBHBHBHBHBHBHBHBHBHBHBHBHBHBHBHBHBHBHBHBHBHBHBH

?£?£?£?£?£?£?£?£?£?£?£?£?£?£?£?£?£?£?£?£?£?£?£?£?£?£?£?£?£?£?£?£

JIJIJIJIJIJIJIJIJIJIJIJIJIJIJIJIJIJIJIJIJIJIJIJIJIJIJIJIJIJIJIJIJIJI

88888888888888888888888888888888

JJJJJJJJJS'S'S'S'S'S'S'S

555555555555555555555555555555555555555555555555555555555555555555

RYRYRYRYRYRYRYRYRYRYRYRYRYRYRYRYRYRYRYRYRYRYRYRYRYRYRYRYRYRYRYRYRYRY

THE QUICK BROWN FOX JUMPS OVER THE LAZY DOG 1234567890.

Table 3. FAULTY TEST MESSAGE No. 1.

Table 3 - Explanatory Notes

Obvious printing errors in Table 3 are '0' (line 2) '@' and '9' (line 4). All these characters appear to be moving too far from a counter-clockwise direction and partly printing the following adjacent character. However, since this is not conclusive enough to determine the cause of the errors, it will be necessary to lower the corrector track rail as described above and re-run the test message with the typehead corrector mechanism isolated. The re-run test is shown in Table 4.

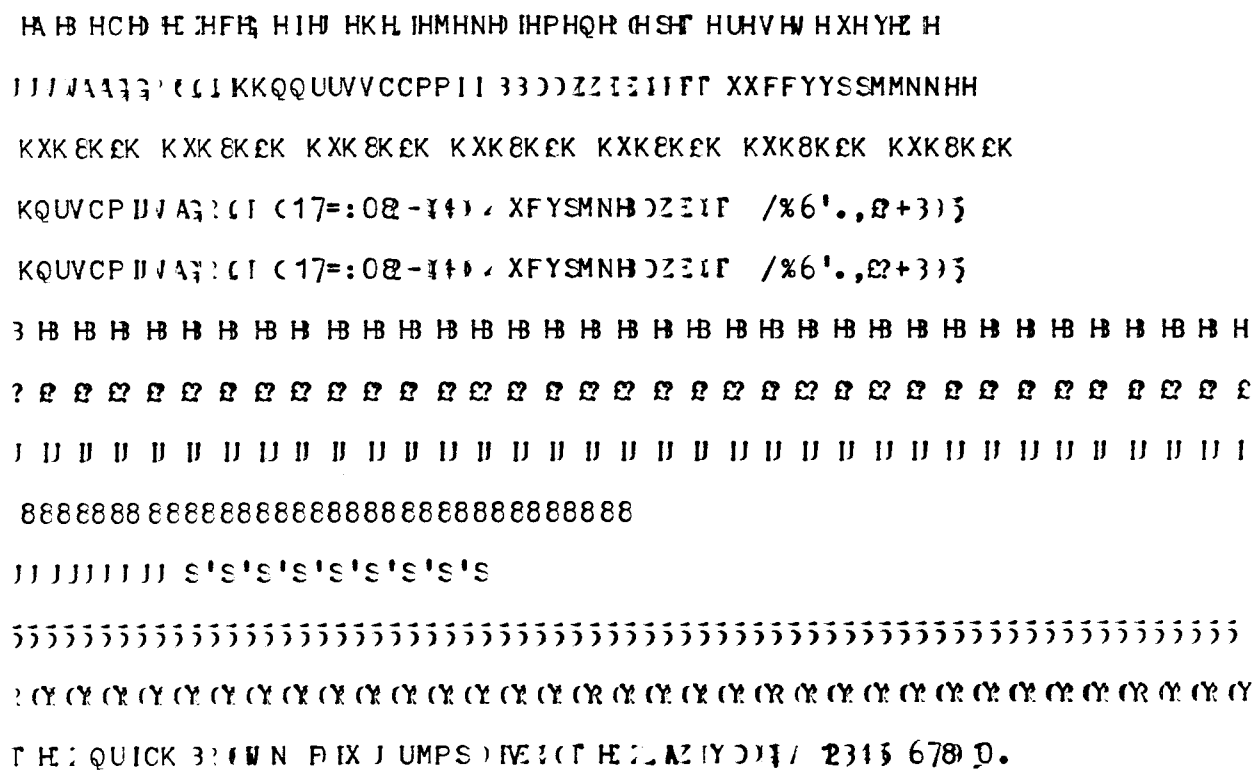

Table 4. RE-RUN FAULTY TEST MESSAGE No. 1

Table 4 - Explanatory Notes

It can now be seen that all the characters on the clockwise movement side of the typehead are printing substantially squarely. The characters on the counter-clockwise movement side, however, are all printing heavily on their right-hand sides. This indicates that they are moving too far under the drive of the aggregate motion lever common to them all, i.e. No.3. This lever requires a slight readjustment to restrict its movement, after which all the characters, except those in lines 6, 7, 8 and 9, should print squarely. Note that the characters in lines 6, 7, 8 and 9, which check the circular limits of the aggregate motion mechanism, may not print squarely even after the readjustment of the lever has been made, because without any corrector action some overthrow is usually unavoidable.

As a final check, return the corrector track rail to its operating position and re-run the test message.

H/HBHCHDHEHFHGHIHJHKHLHMHNHOHPHQHRHSHTHUHVHWHXHYHZH

JJWW; GGRRLLKKQQUUVVCCPPII BBDDZZEEOOTTXXFFYYSSMMNNHH

KXK8K£K KXK8K£K KXK8K£K KXK8K£K KXK8K£K KXK8K£K KXK8K£K

KQUVCPIJW/GRL (17=:082-@4) XFYSMNHBDZEOT /%6'.,£?+395

KQUVCPIJWAGRL (17=:082-@4) XFYSMNHBDZEOT /%6'.,£?+395

BHBHBHBHBHBHBHBHBHBHBHBHBHBHBHBHBHBHBHBHBHBHBHBHBHBHBHBHBHBHBHBH

?£?£?£?£?£?£?£?£?£?£?£?£?£?£?£?£?£?£?£?£?£?£?£?£?£?£?£?£?£?£?£?£

JIJIJIJIJIJIJIJIJIJIJIJIJIJIJIJIJIJIJIJIJIJIJIJIJIJIJIJIJIJIJIJIJIJI

88888888888888888888888888888888

JJJJJJJJJS'S'S'S'S'S'S'S

55555555555555555555555555555555555555555555555555555555555555555555

RYRYRYRYRYRYRYRYRYRYRYRYRYRYRYRYRYRYRYRYRYRYRYRYRYRYRYRYRYRYRYRYRYRY

THE QUICK BROWN FOX JUMPS OVER THE LAZY DOG 1234567890.

Table 5. FAULTY TEST MESSAGE No. 2

Table 5 - Explanatory Notes

Obvious printing error in Table 5 is 'A' (lines 1, 2 and 4) not moving far enough from the counter-clockwise direction and thus partly printing the preceding adjacent character 'G'. The letter 'D' (line 5) is blurred, with an indication that it is not moving far enough. Lower the corrector track rail and re-run the test message which will now be as shown in Table 6.

HAHBHCHDHEHFHGHIHJHKHLHMHNHOHPHQHRHSHTHUHVHWHXHYHZH

JJKKLLMMNNOOPPQQRRSSTTUUVVWWXXYYZZEEOOTTXXFFYYSSMMNNHH

KXKEKDK KXKEKDK KXKEKDK KXK8KDK KXK8KDK KXK8KDK KXK8KDK

KQLVCPIJKAGPL (17=:C82-@4) XFYSMNHBDZEOT /%6'.,£?+395

KQLVCPIJKAGPL (17=:C82-@4) XFYSMNHBDZEOT /%6'.,£?+395

BHBHBHBHBHBHBHBHBHBHBHBHBHBHBHBHBHBHBHBHBHBHBHBHBHBHBHBHBHBHBHBH

?£?£?£?£?£?£?£?£?£?£?£?£?£?£?£?£?£?£?£?£?£?£?£?£?£?£?£?£?£?£?£?£?£

JIJIJIJIJIJIJIJIJIJIJIJIJIJIJIJIJIJIJIJIJIJIJIJIJIJIJIJIJIJIJIJIJIJI

888888888888888888888888888888888888

JJJJJJJJJJ'3'3'3'3'3'3'3'3'3

555555555555555555555555555555555555555555555555555555555555555555555555555555

RYRYRYRYRYRYRYRYRYRYRYRYRYRYRYRYRYRYRYRYRYRYRYRYRYRYRYRYRYRYRYRYRYRYRYRYRYRY

THE QUICK BROWN FOX JUMPS OVER THE LAZY DOG 1234567890.

Table 6. RE-RUN FAULTY TEST MESSAGE No. 2

Table 6 - Explanatory Notes

It can now be seen that fifteen characters are printing heavily on their left-hand sides. Make a list of these characters against the levers which move to print them. From this list it will be found that No.1 lever appears 5 times, No.3 lever 7 times, No.4 lever 7 times and No.5 lever 7 times, thus the re-run test shows that no particular lever is causing the errors. The fault could possibly be due to general wear but is more likely to be due to the rest position of the typehead being displaced. This conclusion is also supported by the fact that the key letter 'X' is printing slightly heavily on its left-hand side. Return the corrector track rail to its operating position and check the equality of backlash around the printing point of the key characters 'X', 'K', 'Q', 'V' and 'B', as recommended in Adjustment Nos. 59 and 64 inclusive (Part 4, pages 45 to 47). Follow this with another re-run with the corrector track rail lowered and examine the copy again. If any characters are still printing heavily on one side make a further analysis to determine which lever is causing the trouble and refine that lever adjustment accordingly.

As a final check, return the corrector track rail to its operating position and re-run the text message.

HAHBHCHDHEHFHGH HJHKHLHMHNHOHPHQHRHSHTHUHVHWHXHYHZH

JJWWAAGGRRLLKKQQUUVVCCPP I I BBDDZZEEOOTTXXFFYYSSMMNNHH

KXK8K£K KXK 8K£K KXK8K£K KXK8K£K KXK8K£K KXK K£K KXK8K£K

KQUVCPIJWAGRL (17=:082-@4) XFYSMNHBDZEOT /%6'.,£?+395

KQUVCPIJWAGRL (17=:082-@4) XFYSMNHBDZEOT /%6'.,£?+395

BHBHBHBHBHBHBHBHBHBHBHBHBHBHBHBHBHBHBHBHBHBHBHBHBHBHBHBHBHBHBHBHBHBHBH

?£?£?£?£?£?£?£?£?£?£?£?£?£?£?£?£?£?£?£?£?£?£?£?£?£?£?£?£?£?£?£?£?£?£?£

JIJIJIJIJIJIJIJIJIJIJIJIJIJIJIJ IJ IJIJIJIJIJIJIJIJIJIJIJIJIJIJIJIJIJI

88888888888888888888888888888888888

JJJJJJJJJS'S'S'S'S'S'S'S'S

555555555555555555555555555555555555555555555555555555555555

RYRYRYRYRYRYRYRYRYRYRYRYRYRYRYRYRYRYRYRYRYRYRYRYRYRYRYRYRYRYRYRYRYRYRY

THE QU CK BROWN FOX JUMPS OVER THE LAZY DOG 1234567890.

Table 7. FAULTY TEST MESSAGE No. 3

**Table 7 - Explanatory Notes**

Obvious printing errors in Table 7 are 'I' (lines 1, 2 and 8) and '8' (line 3) moving too far from the clockwise direction under the action of the three clockwise levers. To determine which of the levers is at fault, lower the corrector track rail and re-run the test message which will now be as shown in Table 8.

HA HB HCHD HE HF HG H IHJ HK HLH MH MHOHFHQHRHS HTHUH VHW HXHY HZ H

JJWWAAGCRRLLKKQQUU VVCCFFII BBDDZZEE OOTTXXFFYYSS MMNNHH

K XK 8K £K K XK 8K £K K XK 8K £K K XK 8K £K K XK 8K £K K XK 8K £K K XK 8K £K

KQU VCF IJWA GRL (17 =:(82-@4) XFYS MNHBDZE OT /%6! .,£?+3 95

KQU VCF IJWAGPL (17 =:(82-@4) XFYS MNHBDZE OT /%6! .,£?+3 95

B HB HB HB HB HB HB HB HB HB HB HB HB HB HB HB HB HB HB HB HB HB HB HB HB HB HB HB HB HB HB HB HB HB H

? £? £? £? £? £? £? £? £? £? £? £? £? £? £? £? £? £? £? £? £? £? £? £? £? £? £? £? £? £? £? £? £? £? £

J IJ IJ IJ IJ IJ IJ IJ IJ IJ IJ IJ IJ IJ IJ IJ IJ IJ IJ IJ IJ IJ IJ IJ IJ IJ IJ IJ IJ IJ IJ IJ IJ IJ I

88888888888888888888888888888888888

JJJJJJJJS'S'S'S'S'S'S'S

555555555555555555555555555555555555555555555555555555555

RY RY RY RY RY RY RY RY RY RY RY RY RY RY RY RY RY RY RY RY RY RY RY RY RY RY RY RY RY RY RY RY RY RY

THE QUICK BROWN FOX JUMPS OVER THE LAZY DOG 1234567890.

Table 8. RE-RUN FAULTY TEST MESSAGE No. 3

Table 8 - Explanatory Notes

Examination of Table 8 shows two main groups 'VCPI' and 'MNH' printing heavily on their left-hand sides. Both these groups are operated by No.1 lever. The characters 'G' and 'R' also show the same symptoms and are partially operated by No.1 lever. It is necessary, therefore, to restrict the movement of this lever until all these characters are printing squarely.

Although having no connexion with the original fault, line 13 of the re-run test message shows that the characters 'Q', 'E' and 'A' are all printing heavily on their right-hand sides. These characters are operated by No.4 lever and it is advisable to adjust this lever now otherwise, at some later date, a further fault may develop due to this condition.

As a final check, return the corrector track rail to its operating position and re-run the test message.

# APPENDIX E

## LOCTITE SEALANT

### GENERAL

Loctite sealant is a liquid polymer which possesses the property of hardening into a tough plastic bond when confined between closely-fitting metal parts. Nuts, screws and other fasteners retained with the medium strength grade of this sealant can later be released with ordinary hand tools.

Although this sealant does not harden off while exposed to air even when on a metal surface, once it is in close contact with metal in the absence of air, it begins to harden within a few minutes and reaches 85% of its final strength within 4 to 12 hours at 72°F. Loctite is effective on all common metals including steel, iron, brass, aluminium alloys, copper and silver.

The hardening process can be speeded up either by applying heat or by treating the components involved with an activating rinse called Locquic. The bonding time of components previously treated with activator is reduced to about an hour. This activating rinse can also be used to prime the surface of non-metallic and plated parts and so render them capable of being bonded together with Loctite.

The sealant is produced in six main strengths, each of which is made up in various degrees of viscosity. To discriminate between these strengths, the manufacturers tint each one a different colour. The various degrees of viscosity within a particular strength are identified by a reference letter marked on the package and on the sealant container.

At present only *Grade C* Loctite is used on the Model Seventy-five teleprinter. This grade has a shear strength of 300 - 400 psi and a viscosity of 10 - 15 degrees centipoise. It is a blue-tinted liquid with a consistency similar to paraffin. Stocks of Loctite Grade C can be obtained from the Service Division under reference TA1435. The activator Locquic is held under reference number TA1436, and is suitable for all grades of sealant and material.

### APPLICATION

1. Treat components which are to be sealed with a degreasing solvent such as white spirit or trichlorethylene to remove oil or grease. Allow the components to dry off.

2. Dip the components into Locquic priming rinse and then allow them to dry off again. *It is important to be sure that activated parts are quite dry before any of the sealant is applied.* If the components form part of major units secured to the machine, apply the priming rinse to the unit with a small brush. Shield adjacent parts while doing this to prevent the rinse splashing on to moving parts of the machine. Rinsed components can be stored before use, and do not necessarily lose their activation in storage.

3. A small quantity of the Loctite sealant (one drop is usually sufficient) may now be applied direct from the container to the threaded parts of the nut or screw involved, and the parts can then be screwed together. The sealant will harden off in about an hour, and thereafter the two components will be locked together until such time as a turning force sufficient to break down the plastic bond is applied to them.

4. The sealant may also be applied to a fully assembled and tightened nut or screw by placing a drop of sealant at the point where the two threaded portions of the fastener meet each other. The liquid will then be drawn up into the joint by capilliary attraction and will harden between the threads. The presence of a ring of sealant on the outside of the joint after a few minutes indicates that the threaded portion of the screw has been filled.

5. To re-use nuts and screws previously treated with sealant and activator, apply a drop of sealant to their threads either before or after tightening.

6. If any of the sealant drips into the mechanism, remove it at once with trichlorethylene. For obvious reasons, the sealant must not be allowed to harden off on moving parts. Any surplus activator should also be removed, as it has a trichlorethylene base and will therefore strip the oil from any component with which it comes into contact.

DATA SUMMARY

| | |
|---|---|
| Supplies | *Loctite* Grade C is TA1435.<br><br>*Locquic* Activator is TA1336. |
| Grade | Grade C sealant is tinted blue and has a shear strength of 300 - 400 psi. |
| Hardening time | At room temperature Loctite begins to harden within a few minutes of confinement between metal surfaces in the absence of air, reaches 85% of its final strength in 4 - 12 hours and is fully hardened within 24 hours.<br><br>Pre-treatment of components with Locquic priming rinse will reduce the hardening time to one hour Application of heat, in the order of 200°F, will harden off the seal in ten minutes. |
| Shelf life | In a sealed bottle Loctite has a shelf life of at least one year. It must not be contaminated with metal particles however or it will harden off inside the bottle.<br><br>Locquic has an indefinite shelf life but, as it has a trichlorethylene base, it should be kept in a tightly closed container otherwise it will evaporate. |
| Solubility | Loctite is soluble in trichlorethylene and in most degreasing solvents. Hardened Loctite is insoluble in water, petrol and mineral oils. |
| Handling | Loctite is non-toxic and no cases of allergy have been reported to the manufacturers. Avoid contact with organic finishes. Lacquer finishes are softened immediately, but baked enamel finishes will resist contact for several hours. Loctite does not affect thermosetting urea or phenolic-based plastics, neoprene, gum rubber, nylon or polythene. It softens polystrene, and cellulose and vinyl plastics. |
| Priming | The following materials and finishes require a priming rinse in Locquic primer to ensure an adequate bond.<br><br>* all non-metallic parts<br><br>* zinc, cadmium or gold-plated parts<br><br>* anodised parts. |
| Operating range | -65°F to 300°F. |
| Approval | Loctite and Locquic are approved by the Ministry of Aviation under specification DTD900/4588. Both materials are Air Registration Board approved. |

# APPENDIX F

## GLOSSARY OF TERMS

The following explanations of telegraph terms, except where they are derived from standard glossaries, are not intended to be exact definitions of universal application. They are included as descriptions of some of the commoner usages of telegraph terms, chiefly as these apply to Creed teleprinters.

Abbreviation: (BS) = British Standard

**Answer-Back**

A device which, when released by the receiving mechanism in response to an appropriate signal from the distant end, controls the transmitter and causes it to send back automatically the identity of the called station. This facility assures the calling operator:-

(1) that he is connected to the station desired,

(2) that the called teleprinter is operating, even if it is unattended, and

(3) if operated at the end of a message, that the whole message has been received.

**Baud**

The unit of telegraph speed. Telegraph signals are characterised by intervals of time of duration equal to or greater than the shortest or elementary interval. Telegraph speed is, therefore, expressed as the inverse of the value of the elementary interval in seconds. A speed of one elementary interval per second is termed one baud (BS).

The elementary interval for teleprinter transmission is 20 milliseconds i.e. 1/50th of a second. Therefore, the telegraph speed is 50 bauds (see Telegraph Speed).

**Bias Distortion**

Distortion due to either the marking or spacing elements of the signals being lengthened due to asymetry in the transmitting and receiving apparatus (BS).

**Cadence Speed**

For teleprinters this is the telegraph speed in words per minute. Two teleprinters having the same telegraph baud speed do not necessarily have the same cadence speed:

For a telegraph baud speed of 50 bauds, using 7-unit transmission, the cadence speed is 71.4 words per minute.

For a baud speed of 50 bauds, using 7-1/2-unit transmission, the cadence speed is 66.6 words per minute.

**Case**

In telegraphy this term is often used synonymously with shift.

**Character**

A printed symbol. Characters may be letters, figures, punctuation marks or signs. Signs may be sub-divided into operation signs (e.g. +./.=), abbreviation signs (e.g.@.£), and functional signs (e.g. ≡ for Line Feed).

**Combination**

A particular arrangement of code elements.

**Double-Current System**

A telegraph system in which signals are transmitted by reversing a current that is normally on the line during transmission (BS).

**Duplex System**

A multiple-way system in which the circuit is arranged for simultaneous operation in opposite directions, over a single circuit (BS).

| | |
|---|---|
| End-of-Line Indicator | A mechanism attached to the transmitter of a teleprinter, to provide a visual or aural indication when a specific number of keys have been depressed after the Carriage Return key. This device is used as a warning to depress the Carriage Return key in cases where there is no local record or only a tape record at the transmitting end and the receiving machine is a page machine. |
| Extra | A mis-selected element of a code combination in which a spacing condition has been replaced by a marking condition. |
| Failure | A mis-selected element of a code combination in which a marking condition has been replaced by a spacing condition. |
| Figure Shift | One of the shifts into which the characters and functions of the five-unit code are grouped. |
| Function | A teleprinter operation other than printing or perforating which requires the transmission of a particular code combination (e.g. Line Feed). |
| Letter Shift | One of the shifts into which the characters and functions of the five-unit code are grouped. |
| Local Record | A reproduction by the transmitting telegraph instrument of the message transmitted (BS). |
| Margin | The maximum distortion which, when occurring on any or all of the signals applied to a telegraph receiver, is compatible with correct registration of all the symbols for which the receiver is designed (BS). |
| Mark | One of the two kinds of elements in the international binary start-stop code, e.g. the first two elements in the combination for 'A' in the code are marks. |
| Reperforator | An instrument which converts incoming electrical impulses of the five-unit code into equivalent perforations of a paper tape. |
| Send-Receive Switch | A switch used in simplex systems for changing over from the sending to the receiving condition, and vice versa. On the teleprinter this switch is operated automatically, the tongue moving over to the send contact before the transmission of each character signal. The return to the receive contact may take place either directly after the transmission of the character signal, or be delayed. |
| Simplex System | A telegraph system in which the circuit is arranged for operation in one direction at one time (BS). |
| Space | One of the two kinds of elements in the international binary start-stop code, e.g. the last three elements of the combination for 'A' in the code are spaces. |
| TDMS | Teleprinter Distortion Measuring Set. An apparatus for making distortion and margin tests on the transmitting and receiving mechanisms of the teleprinter. |
| Telegraph Distortion | In telegraph systems in which the signals at their origin are characterised by modulation at specific instants, the degree of distortion of the modulations when reproduced at the receiver is the ratio of the difference in delay or reproduction of the instants to the duration of the shortest modulation interval applicable to the particular system under consideration (BS). |
| Telegraph Speed | The rate of transmission, either in characters or words per minute, or in bauds. For the purpose of calculation, a word is accepted as consisting of 5 letters and a space, or 6 characters (BS). |

# APPENDIX H

## TAPE READER ATTACHMENT

### 1. INTRODUCTION

This appendix provides a data summary, outline technical description, lubrication and adjustment instructions for the Tape Reader Attachment to the Creed Manual Seventy-five Teleprinter.

### 2. GENERAL

The Tape Reader Attachment is generally supplied as a factory-fitted unit for keyboard or receiver-only machines; it can also be fitted to machines already equipped with a Reperforating Attachment. The Tape Reader, which is located on the right-hand side of the teleprinter, can be set to accept 11/16 or 7/8 in. wide, 5-track fully-punched paper tape and it can transmit up to the maximum speed of the teleprinter, i.e. 100 words per minute.

No additional motor or transmitter is required as the Reader is driven by levers associated with the standard translator unit. The teleprinter transmitter is controlled by linkages that connect the peckers in the Reader with the combination bars of the keyboard unit. The code settings are conveyed to the translator unit and transmitter by the selector frames, as in normal keyboard operation. A dummy combination bar unit is used when the Reader is fitted to a receiver-only machine.

Depending on the wiring and adjustment of the teleprinter transmitter, the signal output form may be on a single- or double-current sequential basis for on-line telecommunications use, or in the multi-wire (parallel) form used for off-line data processing work.

The off-line use of the Reader is simplified by the mechanical local-record facility of the Model Seventy-five. This facility enables a perforated tape to be read and translated into page copy (off-line) without any signalling power supplies being necessary.

### 3. DATA SUMMARY

Facilities

Tape Reader only:

(a) On-line automatic reading of standard, 5-track punched tape with simultaneous printed local copy of all transmitted messages. Signalling battery required.

(b) Off-line automatic conversion of 5-track tape into page copy. No signalling battery required.

(c) FEED ONLY setting of the Reader control switch enables unwanted parts of the tape to be omitted.

Tape Reader and Reperforating Attachment:

(a) On-line automatic reading of standard, 5-track punched tape with simultaneous printed local copy of all transmitted messages. Signalling battery required.

(b) Normal reperforator facilities for preparing punched tape records of all incoming and outgoing messages.

(c) Off-line preparation of punched tape with local check copy. No signalling battery required.

(d) Off-line tape duplication with local check copy while duplication is in progress. No signalling battery required.

(e) Off-line tape editing involving the production of a second tape (by the Reperforating Attachment) that contains selected parts of a previously prepared tape (as it passes through the Reader) plus additional information inserted from the keyboard. A local check copy is produced automatically and records all material inserted in the new tape.

(f) FEED ONLY setting of the Reader control switch enables unwanted parts of the tape to be omitted.

| | |
|---|---|
| Signalling speed: | Transmits at speed of associated teleprinter. |
| Output: | Via teleprinter transmitter, which can be arranged to provide 5-unit start-stop sequential single- or double-current signals, or 5-element parallel output with a trip signal. |
| Local record: | Automatic local record of all transmitted messages. |
| Manual controls: | ON - Tape feeds and reads; keyboard not available.<br>OFF - Reader inoperative; keyboard available.<br>FEED ONLY - Read action suppressed; tape feeds whenever keyboard is operated. |
| Automatic controls: | Tight-tape and tape-out facilities fitted. |
| Tape details: | Adaptable for either 5-track, 11/16 or 7/8 in. wide fully-punched tapes. Maximum thickness .010 in. Adjustable for centre or advanced feed holes. |
| Feed direction: | Front to rear. |
| Feed action: | Step-by-step. |
| Dimensions: | 3 in. wide, 5 in. deep and 3 in. high. (7.62 cm x 12.7 cm x 7.62 cm.) |
| Weight: | 3 lb (1.3 kg) approximately. |

## 4. OUTLINE TECHNICAL DESCRIPTION

Operation of the Reader is controlled by a manually-operated switch shown in an inset to Fig.H.1. The switch has three positions, ON, OFF and FEED ONLY, which are identified to the operator by coloured bands on the boss of the knob, as follows:-

| | |
|---|---|
| ON | - GREEN |
| OFF | - RED |
| FEED ONLY | - BLACK |

When the switch is selected to ON, the tape feeds and reads. When the switch is selected to FEED ONLY, the sensing tips of the peckers are withdrawn below the tape plate and the feed action is controlled from the keyboard. Operation of any key on the keyboard will now advance the tape in the Reader by one character. Operation of the run out key together with another selected key will cause the tape to advance continuously until the run out key is released. The FEED ONLY facility can be used to omit unwanted portions of the tape as it passes through the Reader.

The Reader may also be switched off independently of the control switch by moving the tight-tape roller upwards so that it overrides the tight-tape latch arm. When switched

off in this manner, the Reader must be restarted by moving the tight-tape roller down past the lobe of the tight-tape latch.

### Sequence of Operation

Fig.H.2 shows the mechanism responsible for putting the keyboard into the continuous-cycling condition during which the Reader controls the teleprinter transmitter by acting on the keyboard combination bars. The mechanism is shown in the rest condition, i.e. the position it takes up when the manual control switch, Fig.H.1, is set to OFF.

In the OFF position, the lobe of a cam 4, Fig.H.2, mounted on the control switch camshaft 3, holds down the code bar suppressor 5. A horizontal projection at the left-hand end of the suppressor presses the five code bars 6 (for clarity, two only are shown in the figure) downwards, so holding the pecker withdrawl lever 15 away from its cam 16.

A torsion spring 12, acting through the pin in the trip link bracket 13 and the trip arm 14, presses the trip spindle 9 in a clockwise direction. The trip lever 8, which is keyed to the right-hand end of the spindle, tensions the trip bar 7 downwards so that the step at the top of the bar is held down against the code bar suppressor as shown in the inset. When the trip bar is in the rest position (as illustrated), the trip interposer 10 is held clear of the keyboard run out bar 11, so allowing the keyboard to function normally.

Switching the control knob to the ON position turns the cam on the control switch camshaft so that its flat portion is presented to the code bar suppressor which then rotates clockwise under the action of its spring. The suppressor lifts the trip bar causing the trip spindle to turn counter-clockwise; the trip interposer and trip arm, which are riveted together and keyed to the trip spindle, consequently move downwards.

This downward movement of the trip interposer and trip arm has three effects, as follows:-

(a) The trip interposer blocks the path of the keyboard run out bar, thus neutralising the single-cycle action of the keyboard mechanism.

(b) The trip arm, Fig.H.3, by acting on the pin in the trip link bracket, pulls down the trip bracket 23 causing it to tread on the keyboard trip slat 24, thus putting the keyboard into the run out condition. The translator camshaft, on which the reset cam 28 is mounted, will now revolve continuously in a clockwise direction.

(c) The trip bracket extension 22 moves down with the trip bracket and, in so doing operates a combination bar release delay mechanism consisting of the latch lever 20, disable lever 21 and release delay lever 27. The purpose of this mechanism is given on page H6.

The code bar suppressor, Fig.H.2, in rising to the ON position releases the code bars, so allowing the pecker withdrawal lever to make contact with its cam in preparation for the tape sensing movement of the peckers.

### Tape Sensing Action

Fig.H.4 illustrates the tape sensing mechanism in the act of reading the tape and transferring the code to the keyboard combination bars. In the illustration, No.1 pecker 29 is shown transferring a space condition through its code bar 31 to a keyboard combination bar 34, while No.5 pecker 30 is transferring a mark condition to combination bar 33 via its code bar 36.

As the pecker operating cam revolves, the roller on the pecker withdrawal lever follows the dictates of the cam to raise and lower the withdrawal lever. When the lever is raised it lifts the code bars which in turn move the peckers clockwise about their pivot, so that the tips of the peckers are withdrawn below the tape plate to enable the tape feed action to take place.

When the pecker withdrawal lever is lowered, the code bars are released. This allows the peckers to rotate counter-clockwise about their pivot under the action of their springs, and so raise the tips of the peckers above the tape plate to scan the underside of the tape.

If a pecker tip senses a hole (i.e. mark) in the tape, the subsequent passage of the tip through the hole will allow the pecker to rotate still further counter-clockwise and

depress its associated code bar fully downwards. This movement orientates the code frames assembly so that the end of its interposer 32 is out of the path of the keyboard combination bar which is then free to move forward and set up a mark condition in the translator unit when released in the normal manner.

If the pecker tip senses unperforated tape (i.e. space), the pecker is restrained by the tape from making any further counter-clockwise movement and the end of the interposer 35 is left in the path of the keyboard combination bar. This prevents the bar from moving forward when released, thus setting up a space condition in the translator unit.

### Tape Feed Action

Fig.H.5 illustrates the tape feed mechanism in the rest position, with tape loaded in the Reader and the tight-tape roller arm 37 fully down. The control switch is at ON.

The tape feed action is controlled by the carriage return cam 44, located on the translator camshaft. As the cam revolves, the roller on the carriage return lever 43 follows the cam profile resulting in an oscillating movement to the extension of the lever at the end farthest from the roller. The extension actuates the feed latch 42 to give an up and down movement to the feed link 41; this movement is transmitted to the feed lever 48 which operates the feed pawl 50. The pawl engages the feed ratchet wheel 52 which is linked to the tape feed spindle, causing the tape to be drawn step-by-step through the Reader.

When the control switch is set to OFF, a flat portion of the control camshaft is presented to the vertical arm of the feed suppression lever 49. This lever turns clockwise under the action of its spring and treads on the horizontal arm of the feed latch, moving the bottom end of the latch away from the carriage return lever and thus suppressing the tape feed action.

### Manual Control Switch

The effect of the three positions (ON, OFF and FEED ONLY) of the manual control switch, Fig.H.1, can be summarised as follows:-

OFF position:

(a) The lobe of the cam on the control camshaft holds down the code bar suppressor, holding the pecker withdrawal lever away from its operating arm. (Fig.H.2 refers.)

(b) The trip bar is down, allowing the trip interposer to be held out of the path of the keyboard run out bar so that the keyboard can function normally. (Fig.H.2 refers.)

(c) The lobe of the control camshaft acts on the short vertical arms of the peckers, holding the pecker tips below the tape plate. (Fig.H.4) refers.)

(d) The flat portion of the control camshaft is presented to the feed suppression lever which turns clockwise to press the feed latch away from the carriage return lever, thus suppressing the tape feed action. (Fig.H.5 refers.)

ON position:

(a) The flat portion of the cam on the control camshaft is presented to the code bar suppressor which rotates clockwise, allowing the pecker withdrawal lever to rise and its roller to make contact with the pecker operating cam. (Fig.H.2 refers.)

(b) The trip arm, acting through the trip link bracket, depresses the keyboard trip slat, so putting the keyboard into the run out condition. (Fig.H.3 refers.)

(c) The flat portion of the control camshaft is presented to the short vertical arms of the peckers, allowing them to turn counter-clockwise and sense the tape. (Fig.H.4 refers.)

(d) The lobe of the control camshaft holds the feed suppression lever away from the feed latch, allowing the tape feed action to take place once every cycle of the translator camshaft. (Fig.H.5 refers.)

FEED ONLY position:

(a) The lobe of the cam on the control camshaft holds down the code bar suppressor, holding the pecker withdrawal lever away from its operating cam. (Fig.H.2 refers.)

(b) The trip bar is down, allowing the trip interposer to be held out of the path of the keyboard run out bar so that the keyboard can function normally. (Fig.H.2 refers.)

(c) The lobe of the control camshaft acts on the short vertical arms of the peckers, holding the pecker tips below the tape plate. (Fig.H.4 refers.)

(d) The lobe of the control camshaft holds the feed suppression lever away from the feed latch, allowing the tape feed action to take place once every cycle of the translator camshaft. (Fig.H.5 refers.)

When the control switch is in the FEED ONLY position, the tape reading action will be suppressed but the tape will advance by one character whenever the translator camshaft is released to turn through one cycle. The translator camshaft can be released either by operating any key on the keyboard (except run out) or by a start signal being received from the distant station.

It should be noted at this stage that if the Reader is switched off either by the tape-out action or by lifting the tape gate, the Reader will disable its feed mechanism and then come to rest. To bring the Reader back into operation, the tape must be reloaded, the tape gate closed and the manual control switch turned to OFF and then back to ON again. The reason for this procedure is explained in the next section.

## Tape-Out Mechanism

Fig.H.2 illustrates the tape-out mechanism at the beginning of the reading cycle.

Once during each cycle the pecker withdrawal lever lowers the tape-out bar 17 and so allows the tape-out seeker 2 to rotate counter-clockwise under the action of its spring. If there is tape in the Reader, the upward movement of the right-hand end of the seeker will be arrested by the tape before the horizontal arm of the tape-out frame 1 can touch the top of the trip bar. If, however, the end of the tape has moved past the sensing point, the seeker will be able to rotate far enough counter-clockwise for the horizontal arm of the tape-out frame to disengage the step on the trip bar from the code bar suppressor.

The subsequent downward movement of the trip bar, caused by the trip link bracket torsion spring acting through the trip spindle, lifts the trip interposer out of the path of the keyboard run out bar. The normal single-cycle action of the keyboard mechanism can now operate and bring the keyboard and the Reader to rest.

It will now be appreciated why, once a tape-out condition has disengaged the trip bar from the code bar suppressor, the control switch must first be switched to OFF and then to ON again to bring the Reader back into operation.

Setting the switch to OFF depresses the code bar suppressor so that it can re-engage the step at the top end of the trip bar, as shown in the inset. Once this has been done, turning the switch to ON presents the flat portion of the cam on the switch camshaft to the code bar suppressor which turns clockwise, lifting the trip bar as it does so.

The bottom end of the trip bar turns the trip spindle to bring the trip interposer down into the path of the keyboard run out bar. Simultaneously, the trip arm depresses the trip link bracket to operate the keyboard trip slat, Fig.H.3, and so put the keyboard into the run out condition which drives the Reader.

## Tight-Tape Mechanism

Fig.H.5 illustrates the components which comprise the tight-tape mechanism (roller arm 37, operating lever 40, tight-tape bar 47 and its trip interposer 45) in the positions they take up when the tape is feeding normally. The control switch is in the ON position.

The tape path lies over the fixed guide roller 38 and beneath the tight-tape roller arm. This arm is held down by the spring connected to the tight-tape operating lever which is clamped round the pivot of the roller arm. A light spring on the tight-tape trip interposer holds the top end of the tight-tape bar in contact with a stop pin on the operating lever.

When the tape is feeding normally, the spring on the operating lever holds the tight-tape bar down, thus pivoting its trip interposer counter-clockwise so that the right-hand of the interposer is held clear of the keyboard trip bar 46. The keyboard can now function normally.

If the tape should tighten, the tight-tape roller arm lifts, allowing the tight-tape bar to rise. The right-hand end of the interposer can now move down into the path of the keyboard trip bar. The resulting inhibition of the keyboard trip action brings the translator camshaft and thus the Reader temporarily to the rest position.

When the tape is released and the tight-tape condition no longer exists, the roller arm moves down, depressing the tight-tape bar and thereby moving the interposer away from the keyboard trip bar. The trip bar can then move to the left so releasing the translator camshaft in the normal manner and restarting the tape reading action.

### Combination Bar Release Delay Mechanism

The combination bar release delay mechanism is located near the front end of the translator camshaft in the area indicated on Fig.H.1. The components which comprise the delay mechanism (latch lever 20, disable lever 21, trip bracket extension 22 and release delay lever 27) are illustrated in Fig.H.3. The function of the mechanism is to delay by some 20 milliseconds the time at which the combination bar reset lever 19 allows the combination bars to move to the right. This delay ensures that the tape reading action has been completed before the combination bars read off the code combination on the ends of the interposers.

When the control switch is at OFF, the trip bar is down and the trip interposer together with the trip arm consequently raised, as shown in Fig.H.2. The trip link bracket torsion spring, Fig.H.3, holds the trip bracket away from the keyboard trip slat and causes the left-hand end of its extension to turn the disable lever counter-clockwise. The left-hand end of the disable lever bears on the delay lever extension 25 (part of the release delay lever) and turns the delay lever clockwise against its spring. Latch arm 26 (also part of the release delay lever) is thus held away from the end of the latch lever, so allowing the combination bar reset lever to function normally.

When the control switch is turned to ON, a projection on the trip bracket treads on the keyboard trip slat releasing the keyboard trip bar and the five combination bars which then slide to the right. The keyboard trip bar releases the lag weight which in turn releases the translator camshaft causing the keyboard reset cam 28 to rotate. The five combination bars then sense the code combination on the ends of the interposers. The movement of the combination bars also turns the combination bar reset lever counter-clockwise to make contact with the keyboard reset cam which is turning to meet it.

After the Reader code setting has been transferred to the translator unit by the selector frames, the keyboard reset cam acts on the combination bar reset lever whose lower end presses the keyboard trip and combination bars back to the left. As the combination bar reset lever turns, the latch lever rises to allow the latch arm to slip beneath it.

Once the high point of the keyboard reset cam has passed the roller at the top end of the combination bar reset lever, the combination bars would be released again were it not for the latch lever being engaged with the latch arm. Because of this latching action, the combination bars are not released to read off the next code setting from the Reader until the high point of the keyboard reset cam has moved round to depress the release delay lever and release the latch. The time taken by the reset cam to travel from the roller on the combination bar reset lever to the roller on the release delay lever is approximately 20 milliseconds, and is the time delay referred to at the beginning of this section.

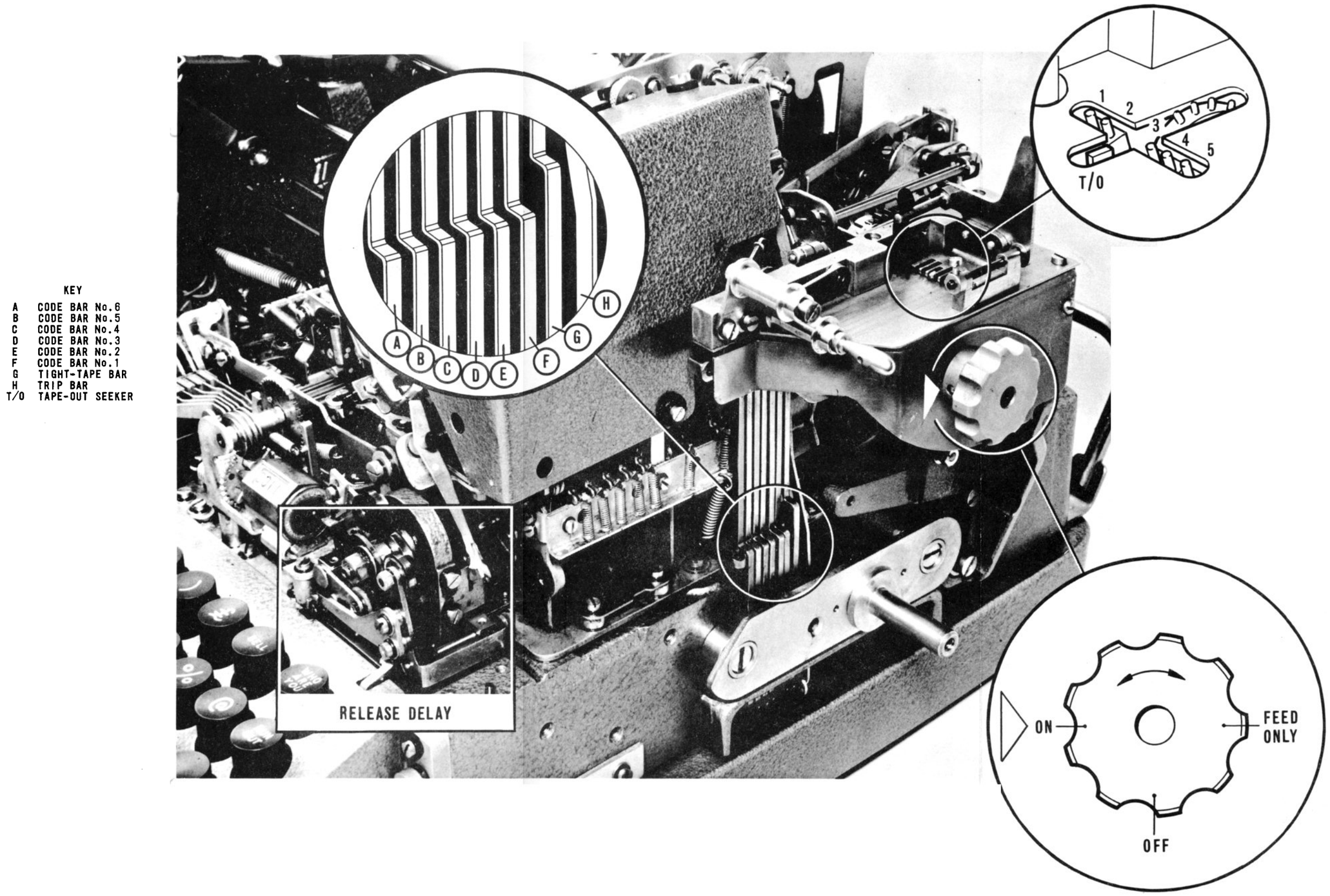


Fig. H.1 TAPE READER—MAIN FEATURES

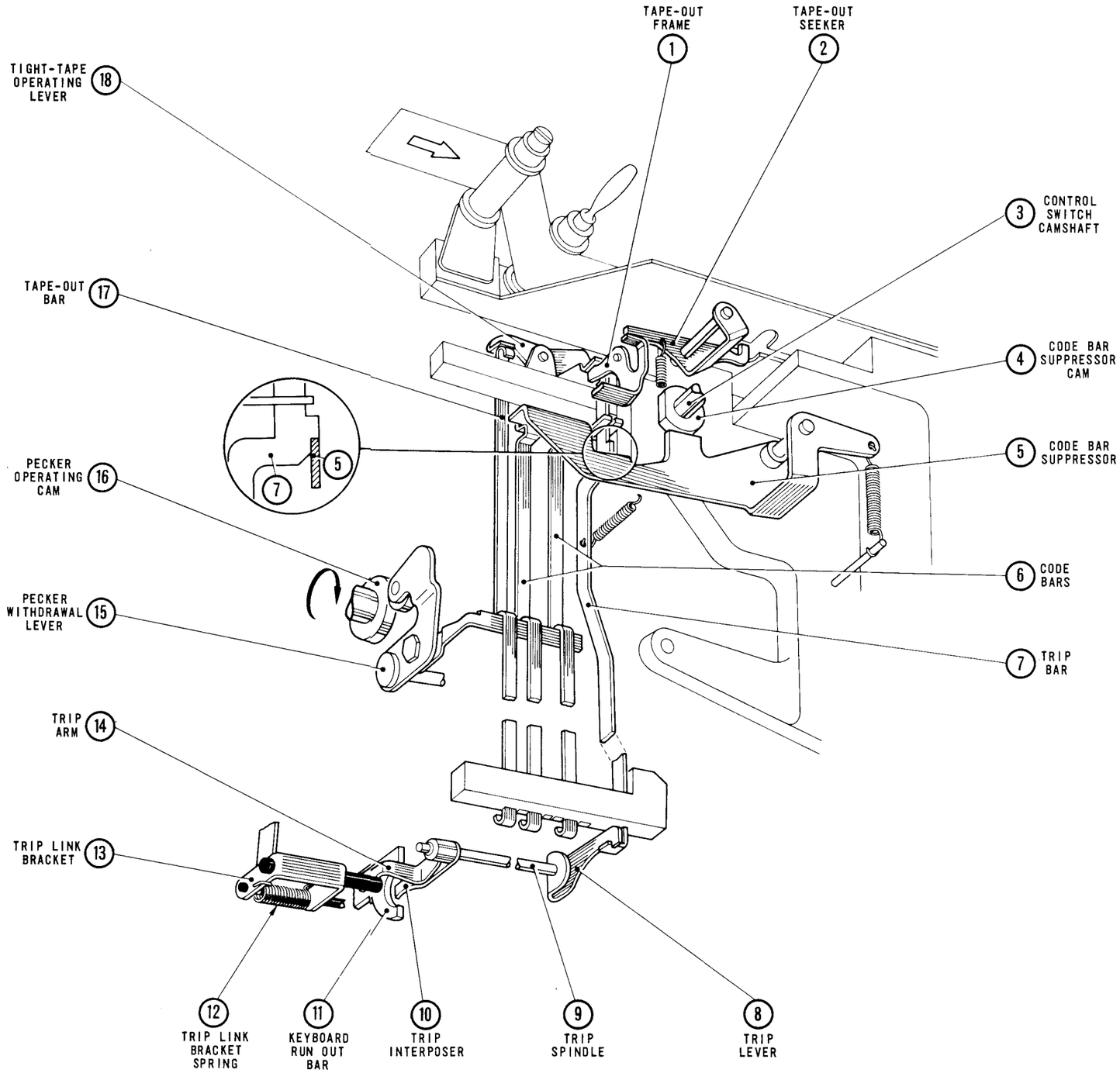


Fig. H.2 START AND TAPE-OUT MECHANISMS

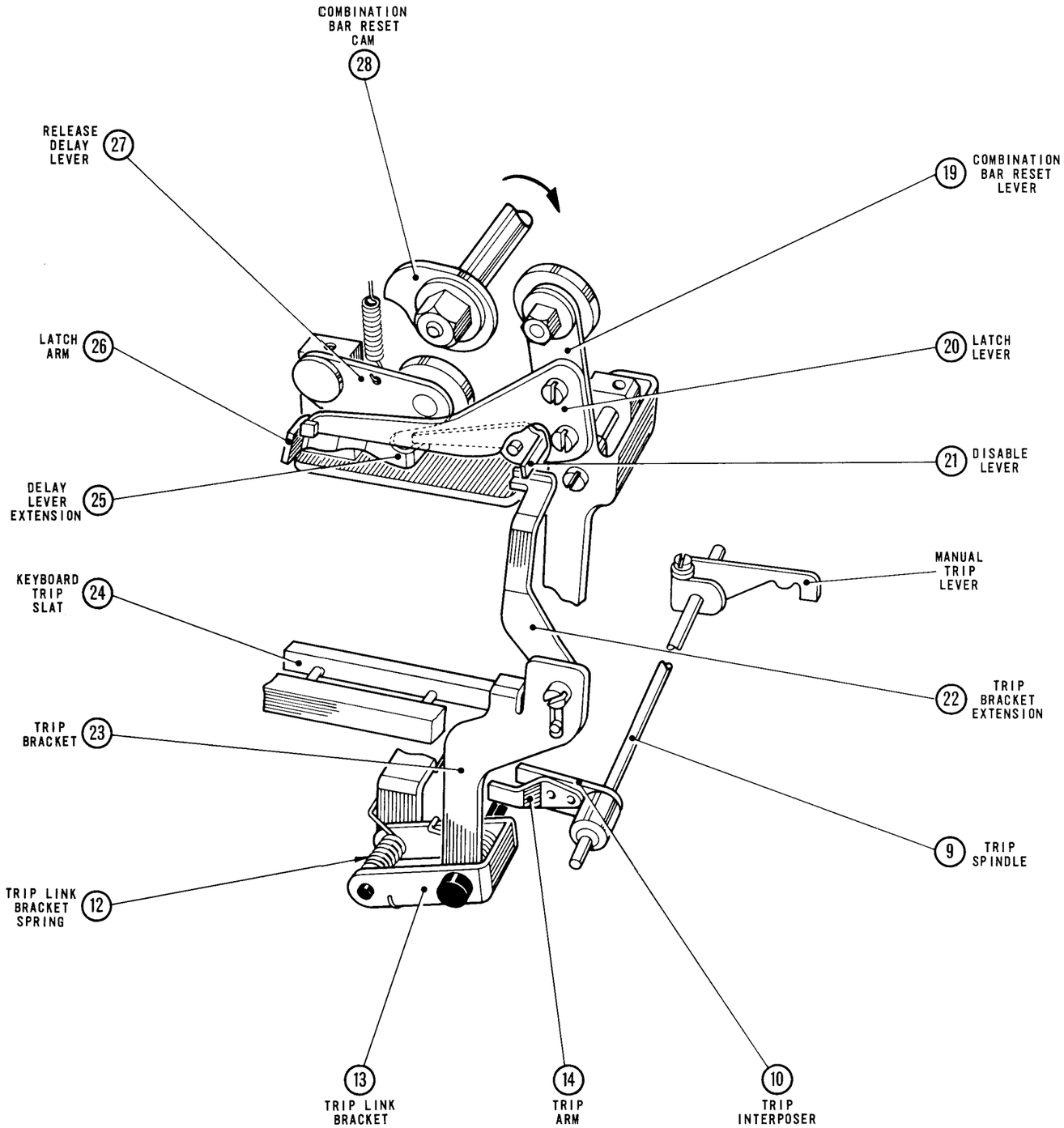


Fig. H.3 KEYBOARD TRIP AND RELEASE DELAY MECHANISMS

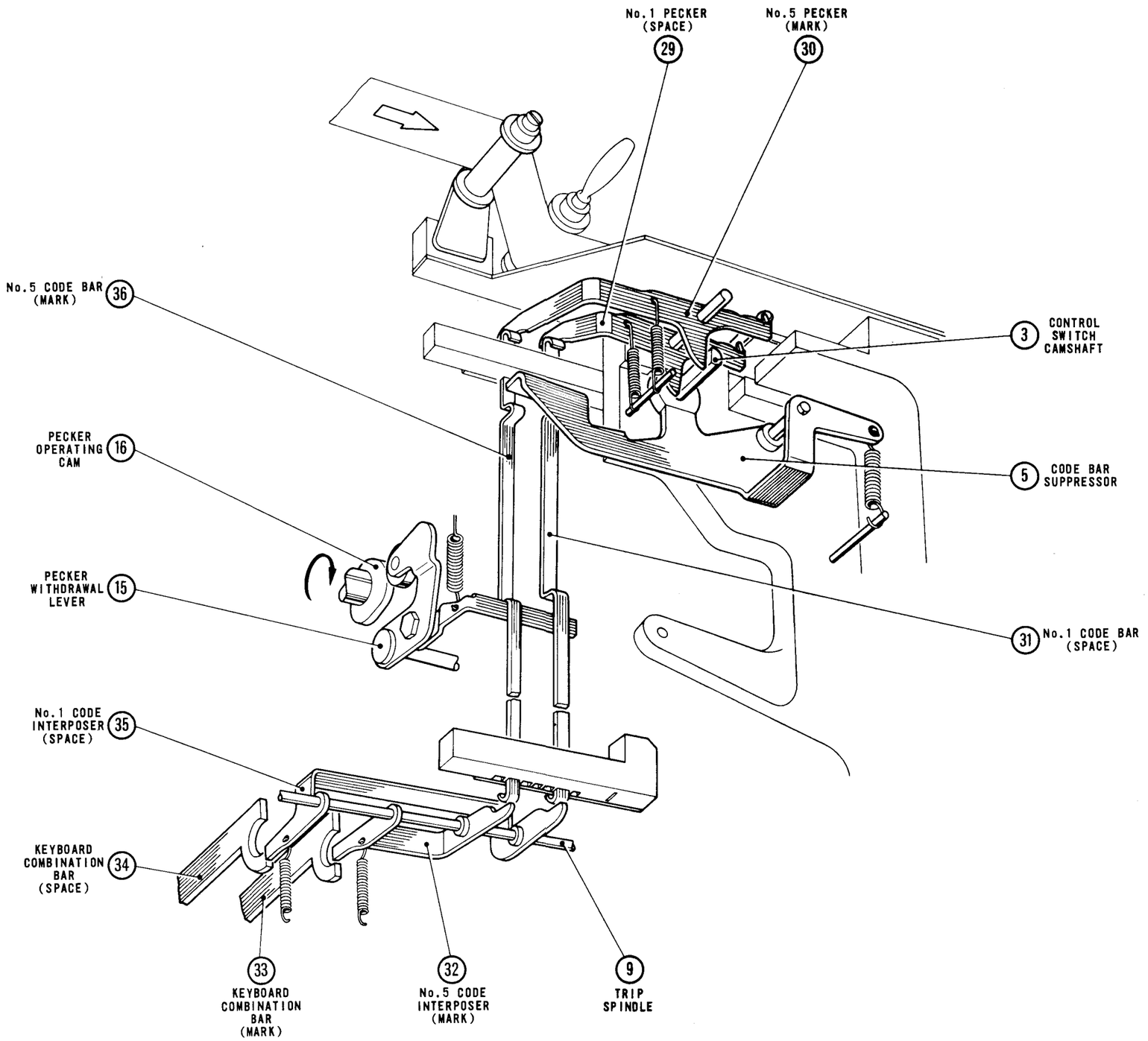


Fig. H.4 TAPE SENSING MECHANISM

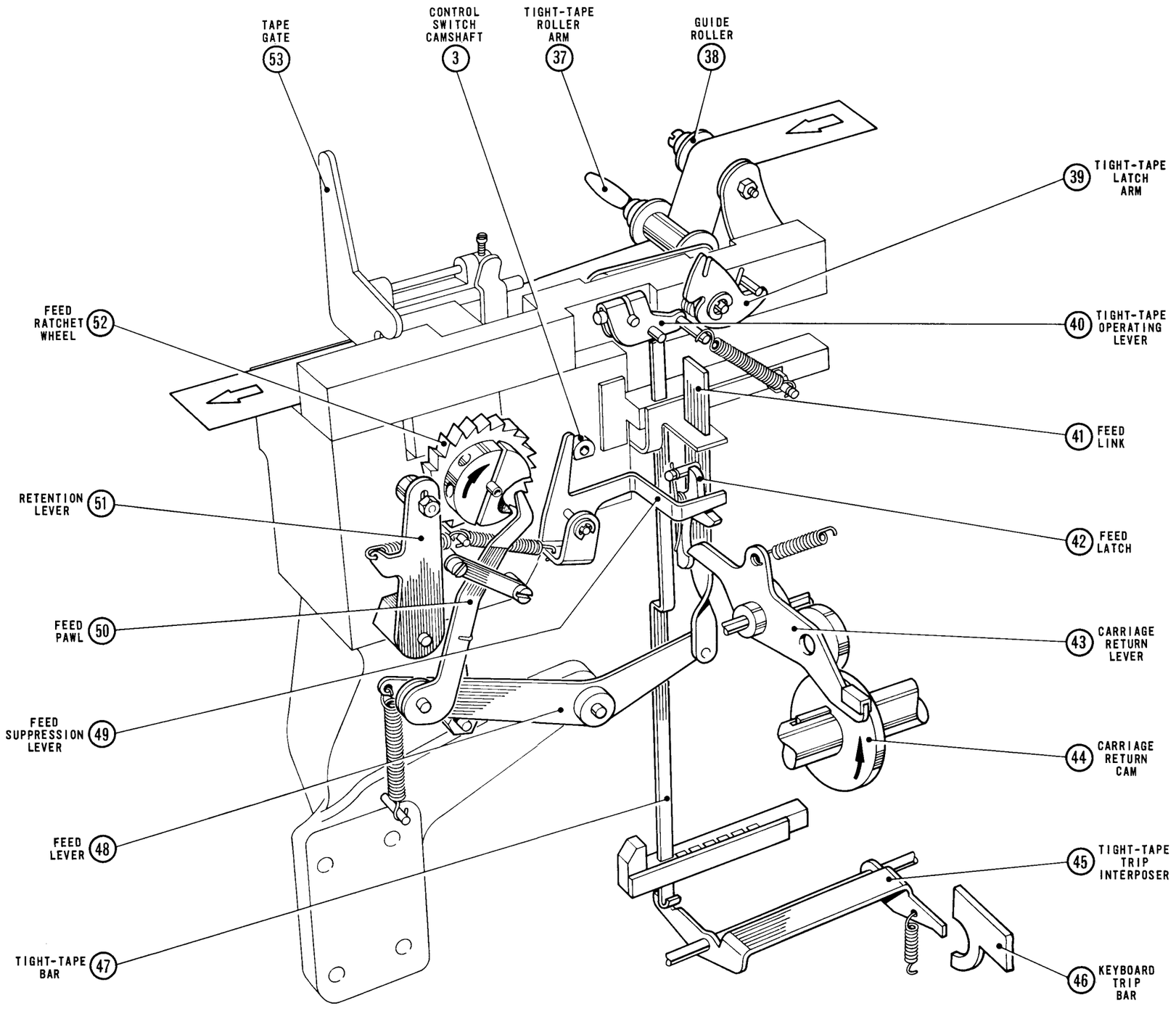


Fig. H.5 FEED AND TIGHT-TAPE MECHANISMS

## 5. LUBRICATION INSTRUCTIONS

Lubricate all pivots and bearings with Creed Lubricant No.2 at the intervals recommended in the Maintenance Instructions (Part 3, pages 1-10).

## 6. ADJUSTMENT INSTRUCTIONS

### 1. Keyboard Combination Bar Reset

Check

1.1 Set the manual control switch to OFF. Depress any key on the keyboard, lift the translator clutch abutment and turn the machine by hand until the roller on the combination bar reset lever, Fig.H.6, is approximately 1/8 in. (dimension 'ha' - inset 1) off the peak lift of the combination bar reset cam. Check that in this position the combination bar lever latch has now reset.

Action

1.2 If this is not so, clacken the nut securing the reset lever eccentric and adjust the eccentric until dimension 'ha' is obtained. Tighten the nut.

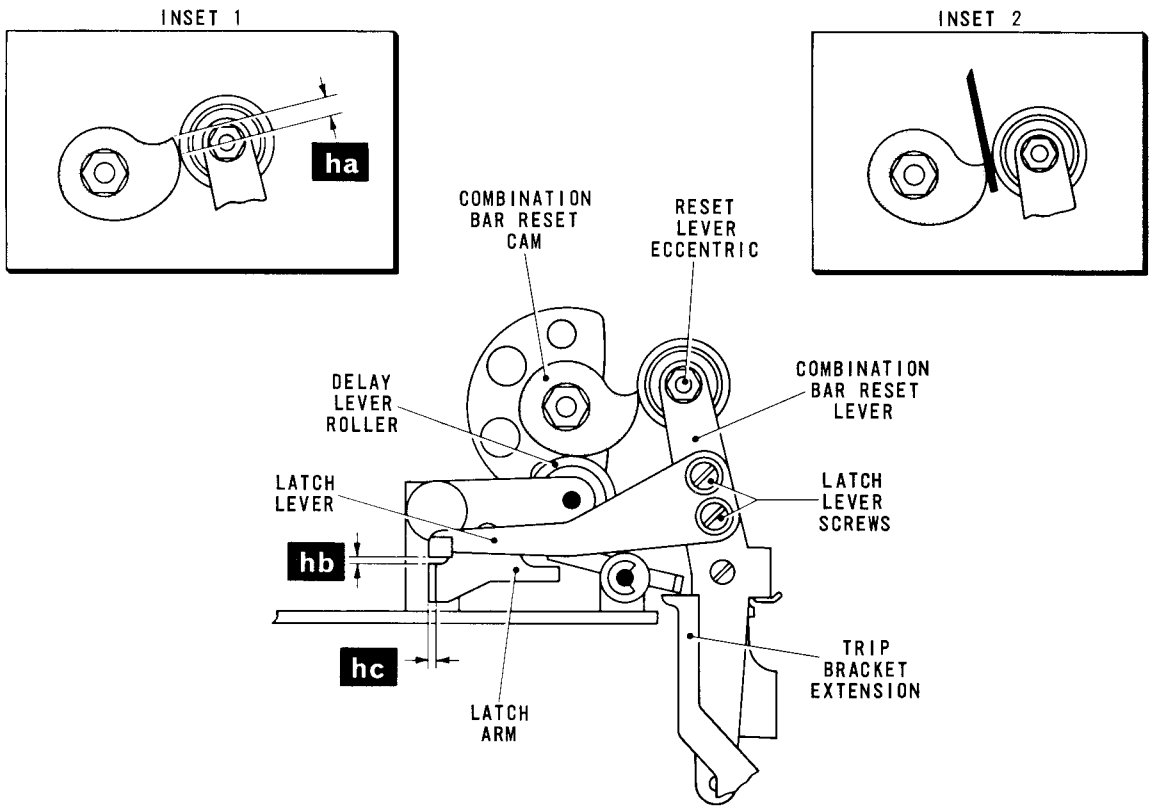


Fig. H.6 COMBINATION BAR RESET AND DELAY MECHANISMS

Check

1.3 Set the manual control switch to ON. Continue to turn the machine by hand until the roller on the reset lever is on the peak lift of the reset cam. Insert a .005 in. feeler gauge between the roller and the cam, as shown in inset 2. Depress each key on the keyboard separately in turn and check that all the keys have unrestricted movement.

Action

1.4 If necessary, refine Adjustment 1.2 above until the correct condition is obtained.

2. Delay Mechanism

Check

2.1 Lift the translator clutch abutment and turn the machine by hand until the roller on the combination bar reset lever, Fig.H.6, is on the peak lift of the combination bar reset cam. Depress the trip bracket extension so that the roller on the delay lever engages the reset cam. Check that there is now a clearance of .010 - .020 in. (dimension 'hb') between the shoe on the left-hand end of the latch lever and the top of the latch arm. Check also that the amount of engagement between the latch arm and the latch lever is approximately .045 in. (dimension 'hc'), i.e. the thickness of the end of the arm.

Action

2.2 To adjust, slacken the screws securing the latch lever and position the lever to satisfy the required conditions. Tighten the screws.

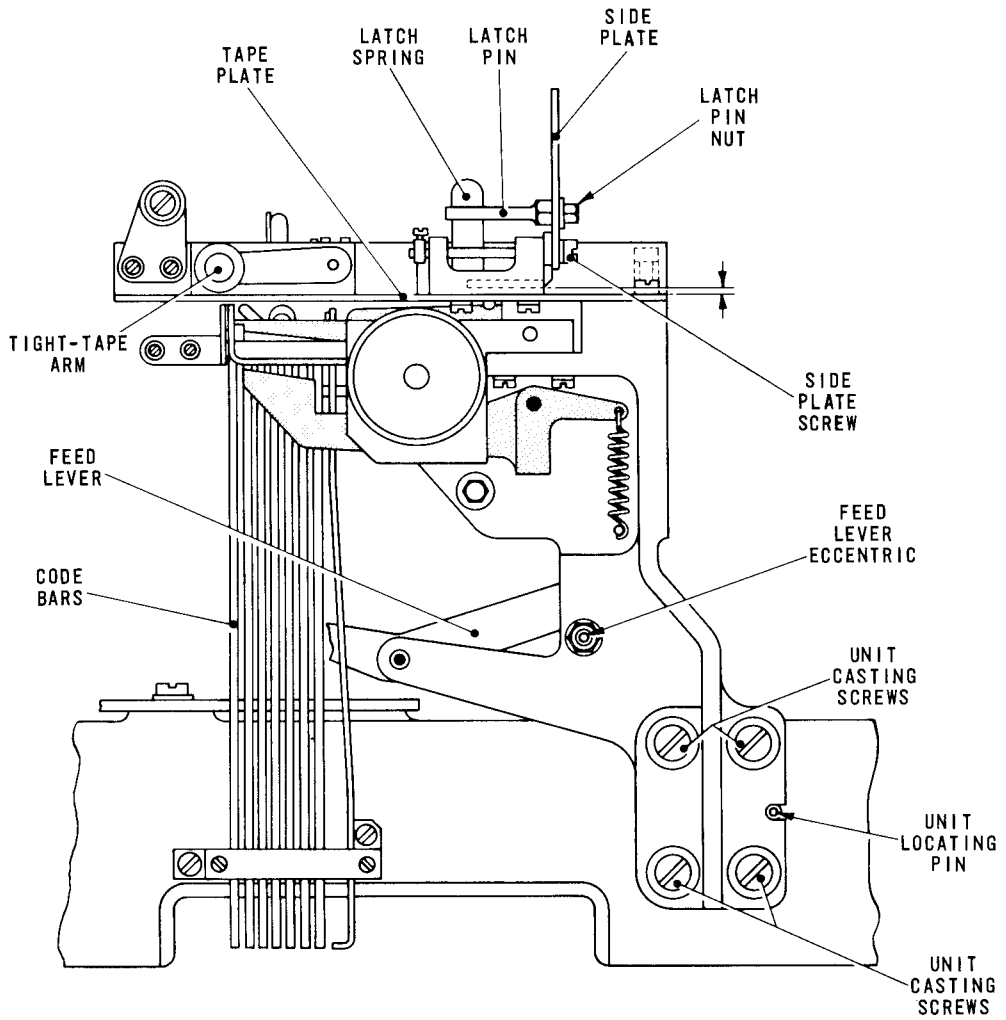


Fig. H.7 TAPE READER—RIGHT-HAND SIDE VIEW

3. Pecker Height

Check

3.1 Lift the translator clutch abutment and turn the machine by hand until the code bars, Fig.H.7, are fully raised. Check that the tips of the peckers are now .005 - .010 in. below the top surface of the tape plate.

Action

3.2 If adjustment is required, slacken the two screws securing the abutment plate, Fig.H.8. Slacken the four screws securing the unit casting, Fig.H.7, and swing the casting until the correct setting is obtained. Ensure that the unit locating pin is held against the casting during this operation. Tighten the four casting screws. Position the abutment plate, Fig.H.8, to abut against the translator rear frame and secure the plate with its two screws.

4. Tape-Out Seeker Height

Check

4.1 Set the manual control switch to ON. Lift the translator clutch abutment and turn the machine by hand until the peckers are fully withdrawn. Check that the tape-out seeker, Fig.H.9, is between .004 in. above and .008 in. below the top surface of the tape plate, Fig.H.7.

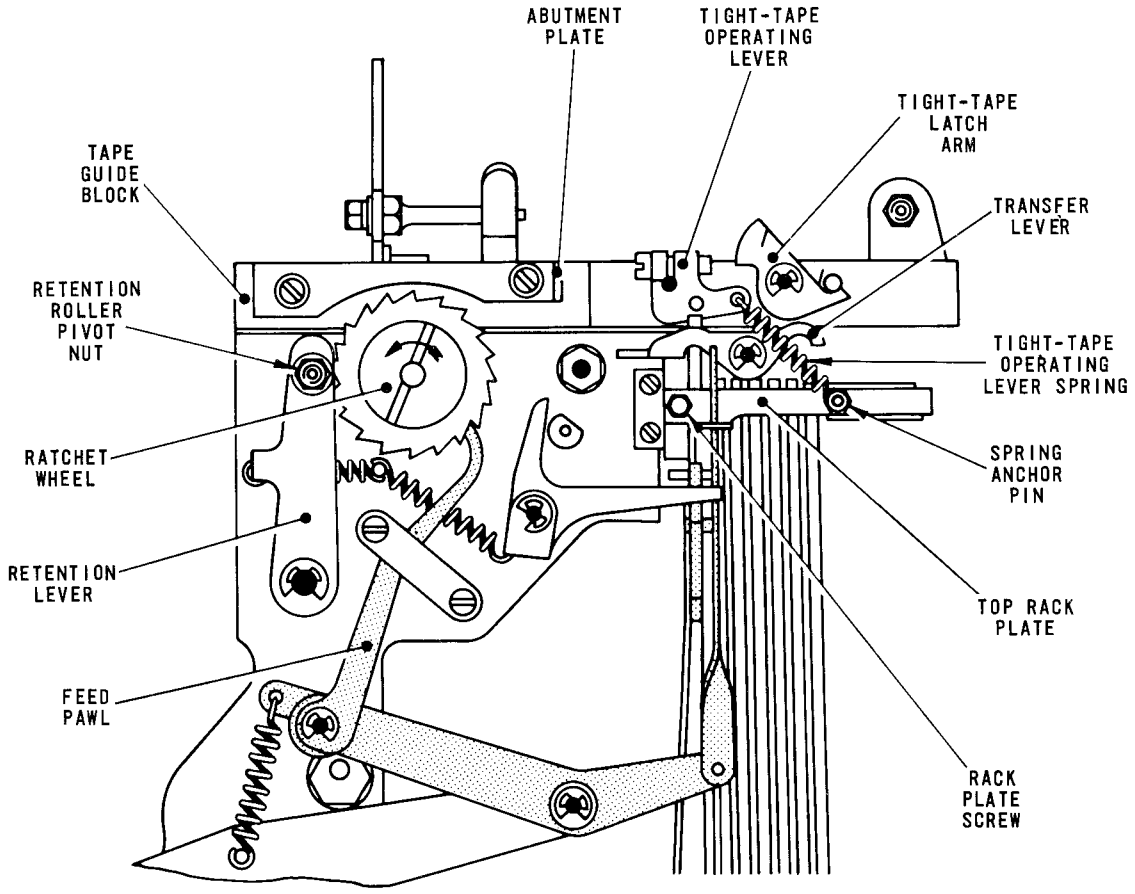


Fig. H.8 TAPE FEED RATCHET MECHANISM

Action

4.2 To adjust, remove the tight-tape operative lever spring, Fig.H.8, slacken the screw and spring anchor pin securing the top rack plate and move the **inner** plate carrying the transfer lever until the correct setting is obtained. Secure the top rack plate with its screw and spring anchor pin. Refit the tight-tape operating lever spring.

5. Feed Latch

Check

5.1 Set the manual control switch to ON. Check that the latching surface of the feed latch, Fig.H.10, lies in the path of the carriage return lever but clears it by .005 - .010 in. (dimension 'hd').

5.2 Depress the arm of the feed latch and check that the latch is free to move clear of the carriage return lever, and that it will snap back into the position shown in the figure as soon as it is released.

Action

5.3 To adjust, slacken the nut clamping the feed lever eccentric, Fig.H.7, and turn the eccentric until dimension 'hd' is obtained. Secure the eccentric with its clamp nut.

6. Retention Lever

Check

6.1 Turn the ratchet wheel, Fig.H.8, slowly from front to rear until the feed pawl **just** drops into a tooth in the wheel. Check that the periphery of the wheel can now be turned a further .010 - .020 in. before the retention lever roller fully engages the teeth.

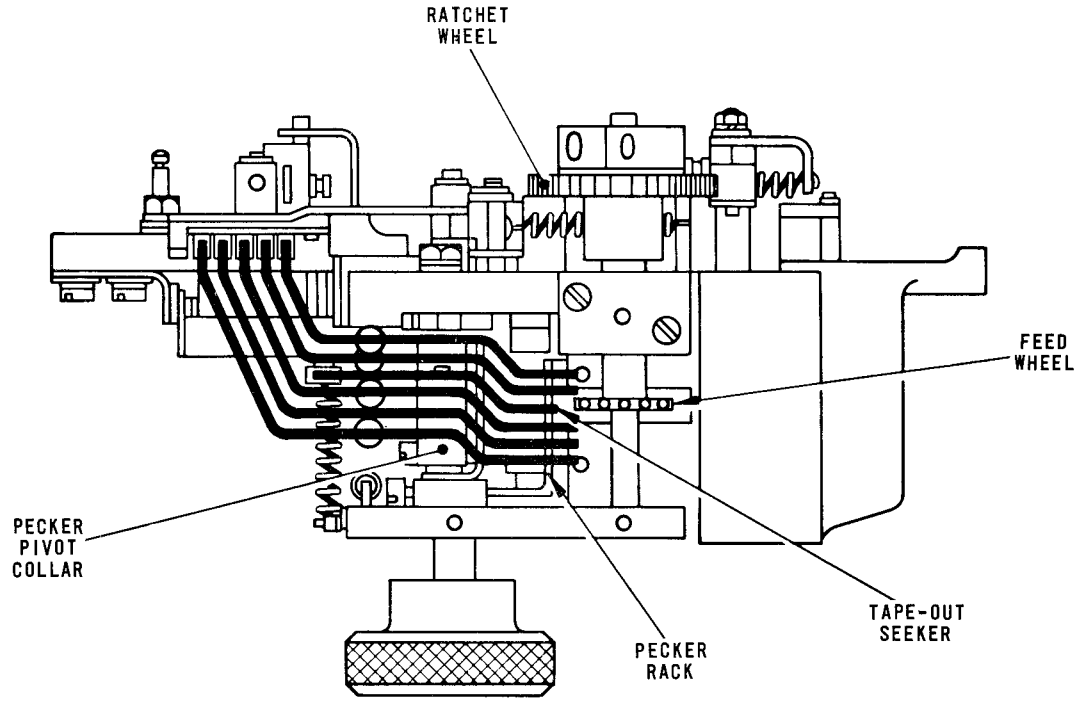


Fig. H.9 PLAN VIEW (TAPE PLATE REMOVED)

Action

6.2 To adjust, slacken the nut clamping the retention roller pivot pin and position the pin in its slot in the retention lever until the condition is satisfied. Secure the pin with its clamp nut.

7. Pecker Alignment

Check

7.1 Set the manual control switch to ON. Light the translator clutch abutment and turn the machine by hand until the peckers and tape-out seeker, Fig.H.9, are flush with the top surface of the tape plate.

7.2 Place a length of fully-punched tape over the feed wheel and pull the tape towards the front of the machine until the top pin of the feed wheel is against the leading edge of the feed hole. Check that the peckers are now in longitudinal alignment with the code holes in the tape. (Ignore lateral alignment at this stage.)

Action

7.3 To adjust, slacken the two screws securing the ratchet wheel and carefully turn the feed wheel in relation to the ratchet wheel until the correct condition is obtained. Tighten the screws.

Check

7.4 With the machine set up as in Check 7.1, ensure that the edge of the tape is registering against the side of the tape guide block, Fig.H.8. Check that the peckers are now in lateral alignment with the code holes in the tape.

Action

7.5 To adjust, slacken the screw securing the pecker pivot collar, Fig.H.9, and the two screws securing the pecker rack, and move the peckers on their pivot until the correct condition is obtained. Tighten the two pecker rack screws, re-position the pecker pivot collar lightly against the end pecker and secure it with its screw. Latch down the tape gate and turn the manual control knob from ON to OFF to ensure that the peckers pass freely through the code holes.

8. Tape Gate Latch

Check

8.1 Close the tape gate. Check that the gate is held down by the latch spring, Fig.H.7, firmly and without any vertical play, yet can be easily unlatched.

Action

8.2 To adjust, ensure that the latch spring is vertical, slacken the nut securing the latch pin and engage the pin with the camming face of the spring until the condition is satisfied. Tighten the nut.

9. Tape Gate

Check

9.1 Check that the tape gate is positioned centrally over the peckers and that there is a parallel clearance of .011 - .013 in. (dimension 'he') between the upper surface of the tape plate, Fig.H.7, and the underside of the gate.

Action

9.2 To adjust, slacken the two screws securing the side plate and insert a .012 in. feeler gauge under the gate near the gate hinge and clear of the peckers. Position the gate so that its slots are centrally over the peckers, and press it down on to the gauge. Tighten the side plate screws and remove the gauge.

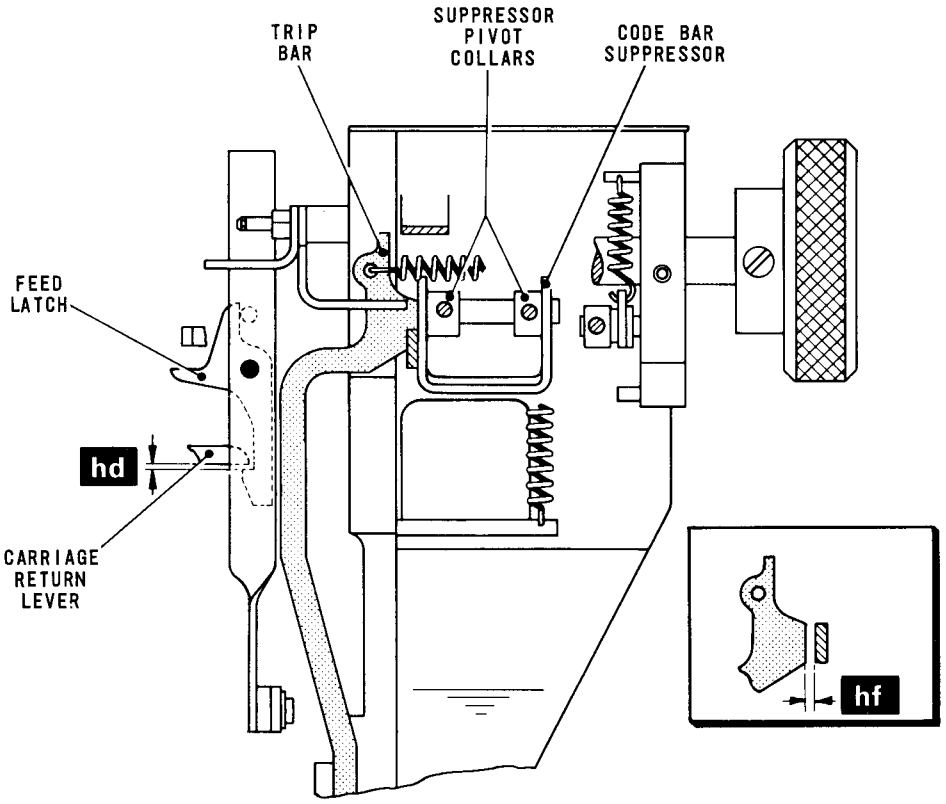


Fig. H.10 TRIP BAR/CODE BAR SUPPRESSOR MECHANISM

10. Trip Bar

Check

10.1 With no tape in the gate, check that there is a clearance of .004 - .010 in. (dimension 'hf' - inset) between the trip bar, Fig.H.10, and the code bar suppressor.

Action

10.2 To adjust, slacken the screws securing the suppressor pivot collars and adjust the code bar suppressor laterally until dimension 'hf' is obtained. Holding the suppressor in this position, set the collars against each flange as shown in the figure. Tighten the collar screws.

11. Keyboard Code Interposers

Check

11.1 With the manual control switch set to ON and the peckers fully raised, remove the signal and power sockets from the rear of the machine main base and

carefully turn the machine on its back. Depress the Letters key and check by eye (through the slot in the right-hand drawer runner) that there is an estimated vertical clearance of .030 - .045 in. (dimension 'hg' - inset 1) between No.1 code interposer, Fig.H.11, and No.1 combination bar. Check also that the code interposers are in alignment with the combination bars and vertical code bars, Fig.H.7.

★ Dimension 'hg' will show a progressive increase for each code interposer.

Action

11.2 To adjust for vertical clearance, remove the four rubber feet and support pillars together with the two round-headed screws which secure the tape drawer assembly. Take care not to damage the tape-out switch operating lever which protrudes through the SRBF cover plate. Remove the five screws securing the SRBF cover plate and take off the plate. Slacken the two screws securing the left-hand bearing bracket, Fig.H.11, and raise or lower the bracket until the required clearance is obtained. Tighten the screws.

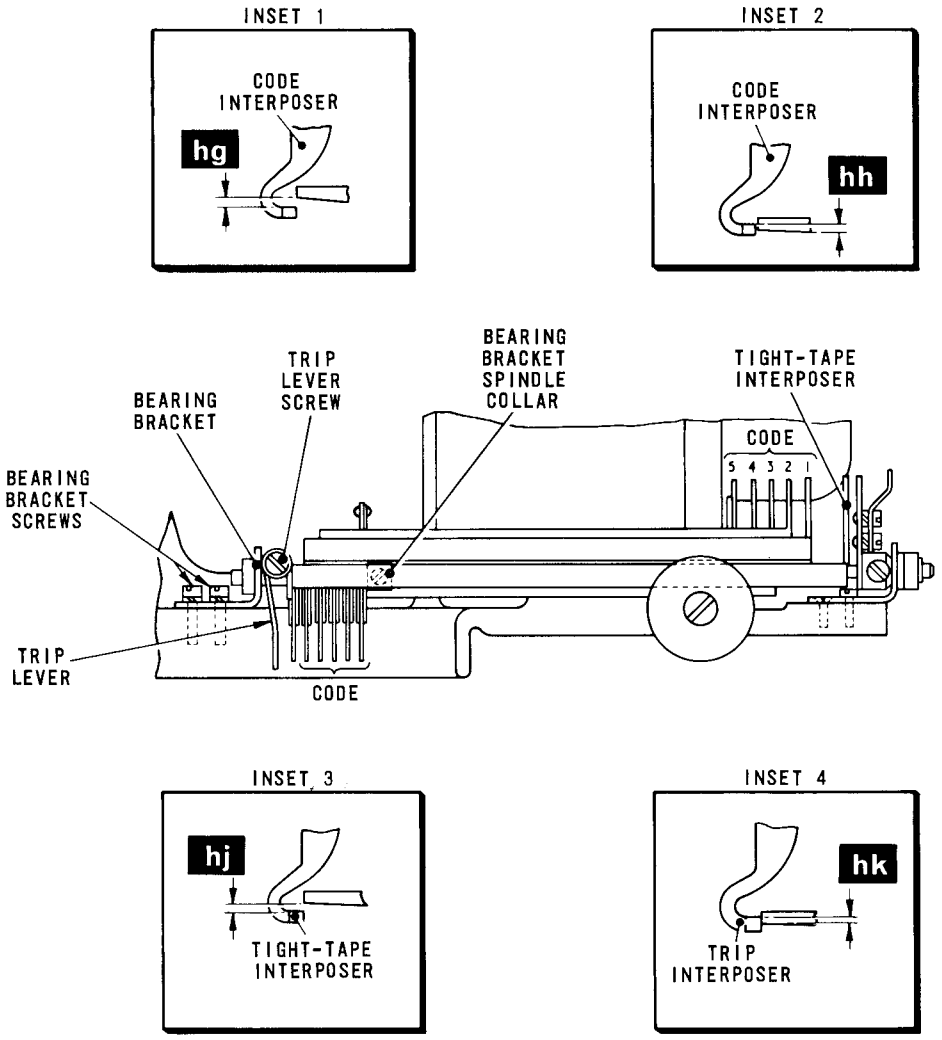


Fig. H.11 CODE FRAMES MECHANISM

11.3 To adjust for alignment with the combination bars and vertical code bars, Fig.H.7, slacken the screw securing the trip lever, Fig.H.11, and the screw securing the bearing bracket spindle collar, and position the bearing bracket, trip lever and collar until the correct condition is obtained. During this adjustment, ensure that the end-play in the code frames is kept to a minimum. Tighten the bearing bracket screws, trip lever screw and the screw clamping the bearing bracket collar.

Check

11.4 Reset the keyboard and set the manual control switch to OFF. Insert a short length of blank tape and turn the manual control switch to ON. Check that the code interposers now engage the faces of their corresponding combination bars by .030 - .045 in. (dimension 'hh' - inset 2).

Action

11.5 To adjust, refine Adjustment 11.2 until dimension 'hh' is obtained. Refit the SRBF cover plate and secure it with its five screws. Refit the tape drawer, ensuring that the tape-out switch operating lever is in the correct position.

12. Tight-Tape Arm

Check

12.1 With the tight-tape arm, Fig.H.7, fully lowered as shown in the figure, check that there is a vertical clearance of .030 - .045 in. (dimension 'hj' - inset 3) between the tight-tape interposer, Fig.H.11, and the keyboard trip bar.

Action

12.2 To adjust, slacken the screw clamping the tight-tape operating lever, Fig.H.8, and position the lever until dimension 'hj' is obtained. Tighten the clamp screw.

13. Manual Trip

Check

13.1 Insert a short length of blank tape and set the manual control switch to ON. Check that the trip interposer, Fig.H.11, now engages the face of the keyboard run out bar by .030 - .045 in. (dimension 'hk' - inset 4).

Action

13.2 If this is not so, slacken the screw securing the trip bracket extension, Fig.H.3. Slacken the two screws securing the trip arm, lift the arm to its highest position and tighten its screws. With the length of blank tape still inserted, turn the manual control switch to OFF. Slacken the screw securing the manual trip lever until it is friction tight, and pull down the trip arm until the keyboard is tripped. Depress the manual trip lever until the trip bar, Fig.H.10, engages the code bar suppressor. Turn the manual control switch to ON so that the manual trip lever, Fig.H.3, is lifted and secure the lever in this position. Turn the manual control switch to OFF and ensure that the trip interposer, Fig.H.11, is now clear of the keyboard run out bar. Tighten the screw securing the trip bracket extension, Fig.H.3.

★ When this adjustment has been completed, ensure that there is a small amount of free movement on the keyboard trip slat when the keyboard has been tripped. If this is not so, refine the adjustment of the manual trip lever.

## 14. Delay Mechanism

Check

14.1 With the machine in the rest position, set the manual control switch to OFF and check that the trip bracket extension, Fig.H.3, pivots the disable lever so that the left-hand end of the lever moves the latch arm out of engagement with the shoe on the end of the latch lever with a minimum clearance of 0.10 in.

14.2 Turn the manual control switch to ON and check that the trip bracket extension now moves down so that the disable lever does not restrict the movement of the release delay lever.

Action

14.3 To adjust, slacken the screw securing the trip bracket extension and adjust the extension until both conditions are satisfied. Tighten the screw.

Unfortunately Appendix J in this copy of the Model 75 Manual is a photocopy.

The quality of the photographs is therefore not up to the usual standard.

Sam Hallas 2009

# APPENDIX J

## SILENCING COVER

### 1. INTRODUCTION

This appendix provides an outline technical description, operating, adjustment, dismantling instructions and parts list for the six versions of the Silencing Cover used with the Creed Model Seventy-five Teleprinter.

The six versions are as follows:-

(a) S.4321 - To fit a Model 75K (Transmitter-Receiver with Keyboard).

(b) S.4322 - To fit a Model 75RP/K (Transmitter-Receiver with Keyboard and Reperforating Attachment).

(c) S.4323 - To fit a Model 75RP/TK (Transmitter-Receiver with Keyboard, Reperforating Attachment and Tape Reader).

(d) S.4324 - To fit a Model 75K/T (Transmitter-Receiver with Keyboard and Tape Reader).

(e) S.4296 - To fit a Model 75R (Receiver-only).

(f) S.4297 - To fit a Model 75RP/R (Receiver-only with Reperforating Attachment).

The four types of transmitter-receiver machines are shown enclosed in their respective silencing covers in Figs.J.1 and J.2. The two receiver-only machines are not illustrated.

### 2. GENERAL

The silencing cover for each of the six versions combines the function of silencing shell with that of cabinet for mounting the components of a page lighting system. Each assembly comprises a top cover and a base, the top cover including a detachable blister to accommodate a reperforating attachment and/or tape reader if fitted. The top cover, base and blister are matched items. They are selectively assembled during manufacture and an identical serial number stamped on each part.

The top cover and base are secured together to enclose the machine, leaving the keyboard and controls accessible to the operator. Doors at the top and side of the top cover provide immediate access for the renewal of paper roll, ink ribbon and paper tape.

### 3. OUTLINE TECHNICAL DESCRIPTION

The cover is fabricated of zinc-coated steel and finished in a light grey hammer-effect stoving enamel. The silencing property of the cover is obtained by lining the top cover, including the blister, with polyether foam and the base with a barrier mat of sound-absorbing felt, the upper surface of which is oil-resistant. Polyether foam on the base acts as a sound-deadener for the keyboard. The feet of the enclosed teleprinter rest on four anti-vibration mountings screwed to the base.

MODEL 75K
(TRANSMITTER-RECEIVER
WITH KEYBOARD)

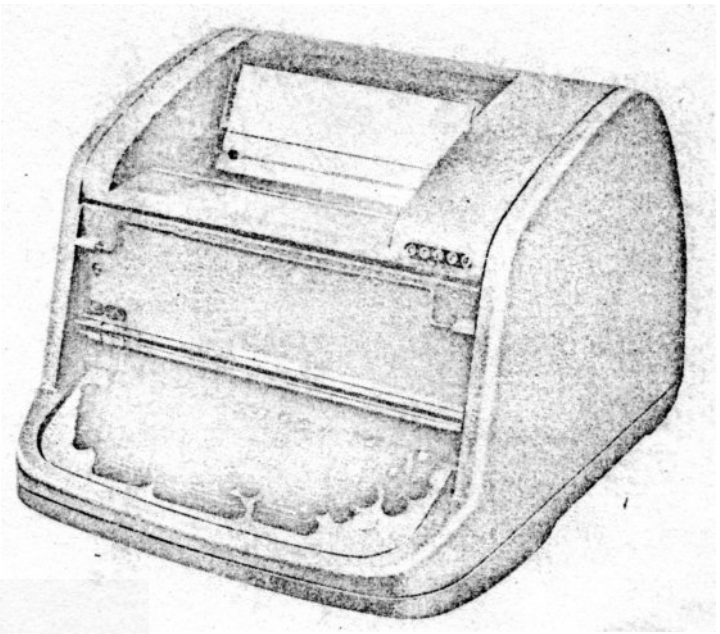

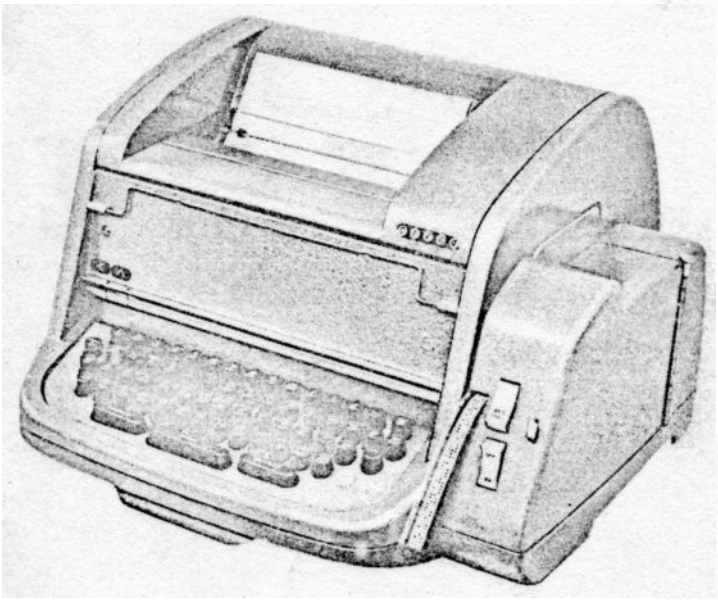

MODEL 75RP/K
(TRANSMITTER-RECEIVER WITH
KEYBOARD AND REPERFORATING
ATTACHMENT)

MODEL 75K/T
(TRANSMITTER-RECEIVER WITH
KEYBOARD AND TAPE READER)

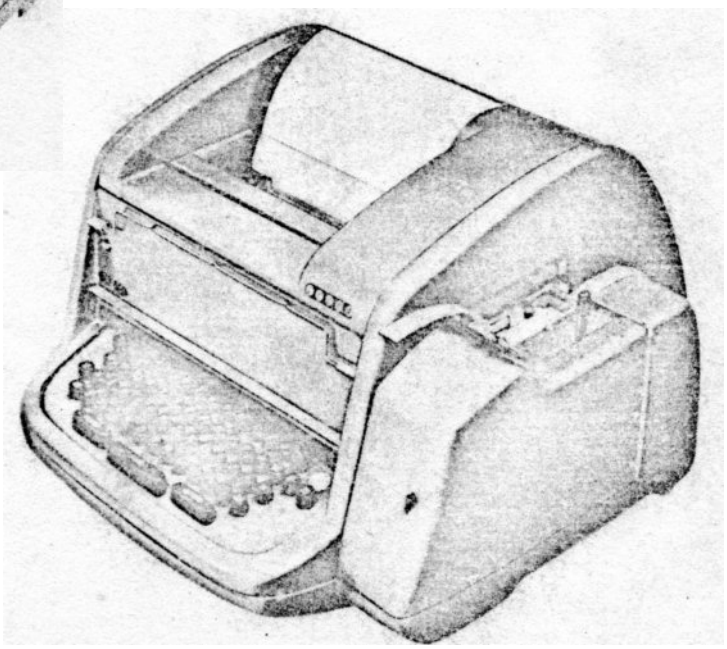

Fig. J.1 SILENCING COVER FOR MODELS 75K, 75RP/K AND 75K/T

Internal illumination of the paper is provided by a 6-watt fluorescent tubular lamp mounted inside the front of the top cover. A control unit located at the rear of this cover includes a lamp-only ON/OFF switch. An adjustable window flap of toughened glass gives a clear view of the printed page. The window is bevelled at its rear edge to facilitate paper tear-off.

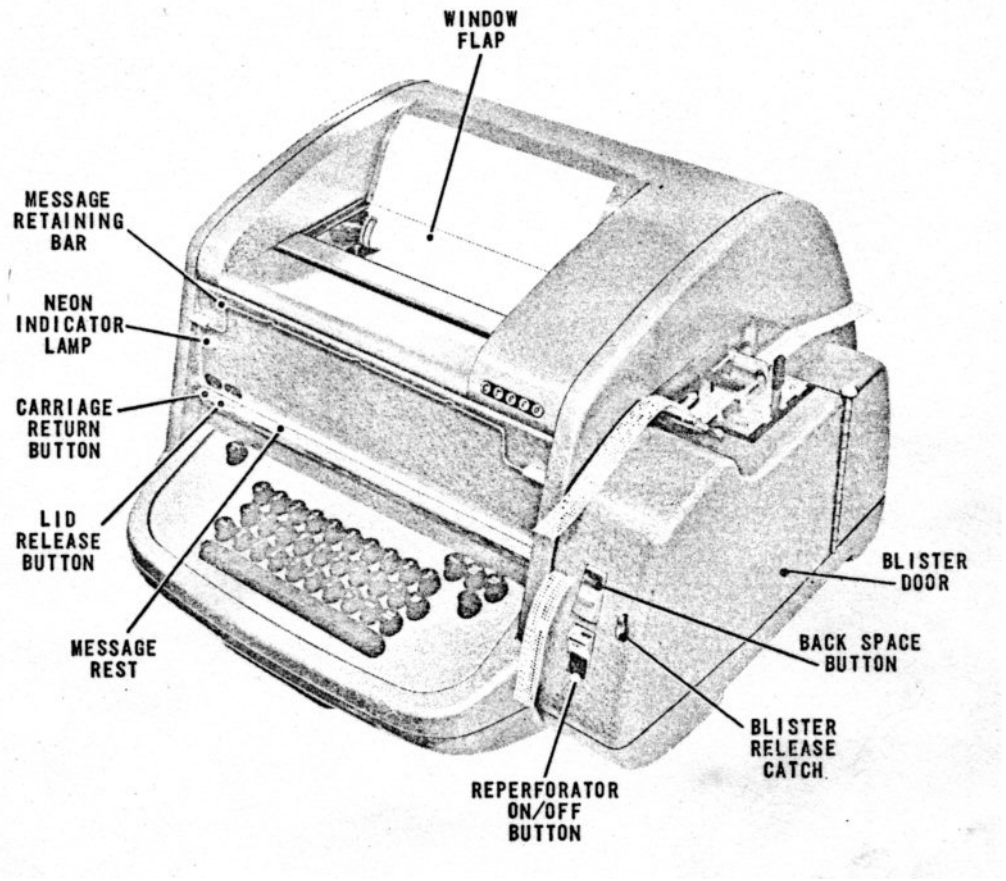


Fig. J.2 SILENCING COVER FOR MODEL 75RP/TK

Fig. J. 2 illustrates the external controls of a Silencing Cover S. 4323. Figs. J. 3 and J. 4 show internal views of the same type of cover and Fig. J. 5 a plan view of its base.

## External Controls

Access to the paper, platen and lighting switch is provided by an adjustable spring-controlled hinged lid, operated by depressing the LID RELEASE button, Fig. J. 2. This button is directly coupled to a spindle controlling the radial position of two spring-loaded latches which hold the lid closed. Depression of the button pivots the spindle and causes the latches to withdraw, so allowing the lid to open fully under the action of its two controlling springs, Fig. J. 3. These springs control the rate at which the lid opens and also prevent the lid from accidental closure.

Depression of the CARRIAGE RETURN button, Fig. J. 2, moves its arm extension, Fig. J. 4, to abut with and operate the teleprinter carriage return lever. Release of the button allows the arm extension to return to normal under the action of its compression spring. The LID RELEASE and CARRIAGE RETURN buttons are common to all versions of the cover.

A cut-out on the top of the attachment blister, Fig. J. 2, provides access to the tape reader and its three-position external control lever. Note that the positions of the ON and INCH ONLY controls are the reverse of those for the equivalent control knob fitted to the tape reader of a machine enclosed in a standard cover. The blister door is secured to the top cover by a hinge pin. This pin has a large diameter head so that it can be withdrawn and the door removed when the space adjacent to the installed machine is limited. In the closed position, the door is held fast by a catch engaging with the cover. Depressing the BLISTER RELEASE catch releases the door which swings clear of the attachment under the action of a leaf spring.

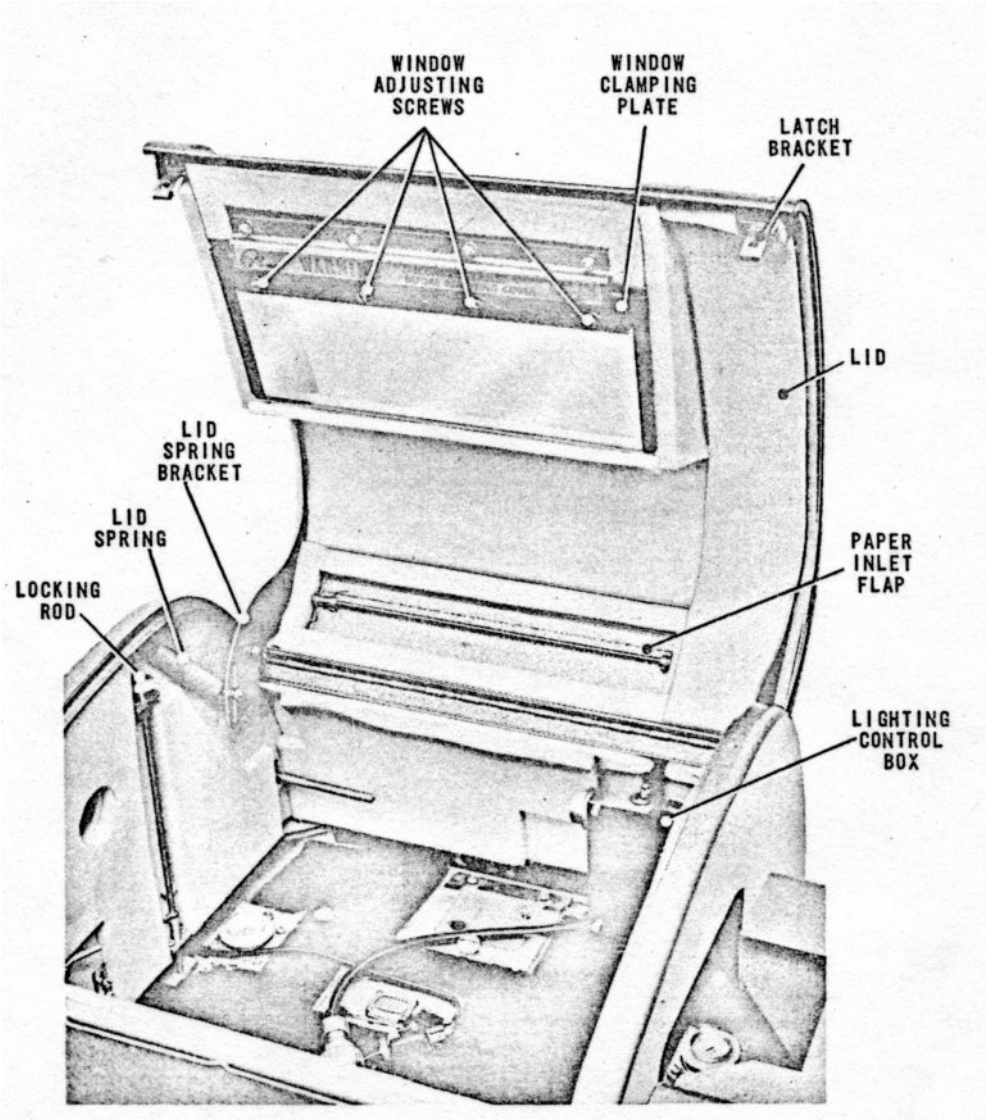


Fig. J.3 SILENCING COVER FOR MODEL 75RP/TK—INTERNAL VIEW

The BACK SPACE and ON/OFF controls for machines with a reperforating attachment are shown in Fig. J. 2. The BACK SPACE button is of the single action 'press-to-operate' type which returns to its initial position under the action of a spring. The ON/OFF button is pivoted at its centre so that, under the tension of a bow of spring steel, a quick toggle rocker movement operates the reperforator control knobs. Before closing the blister door, it is important to ensure that the setting of the ON/OFF button corresponds with that of the reperforator control knob.

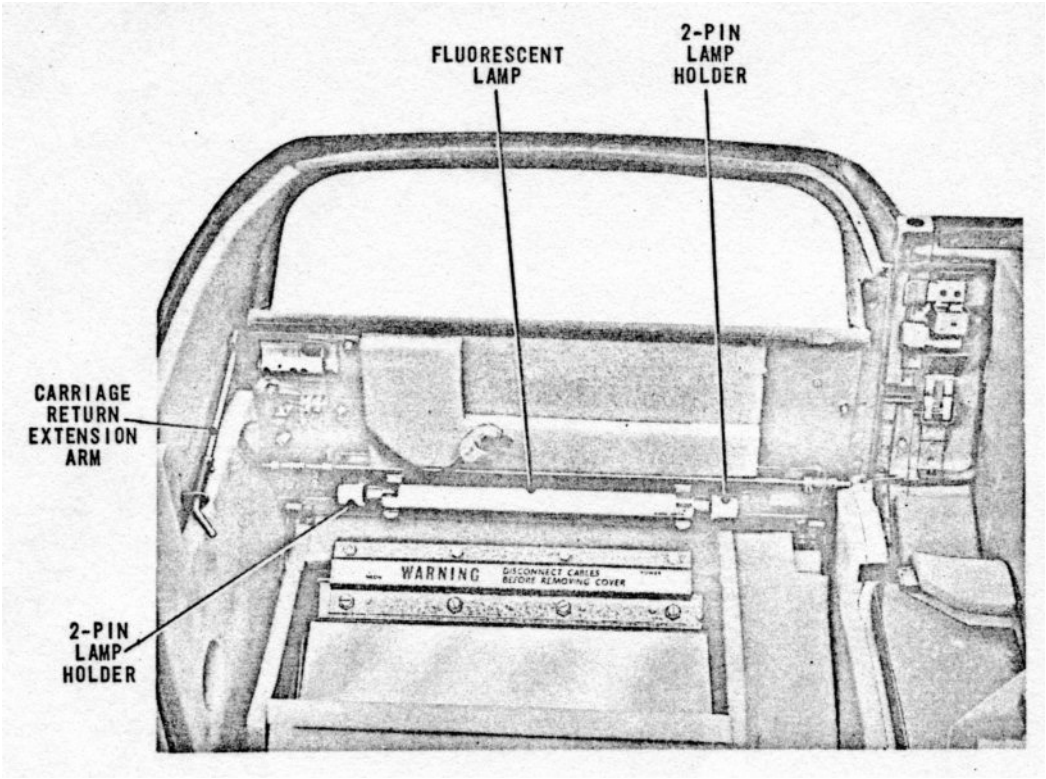


Fig. J.4 SILENCING COVER FOR MODEL 75RP/TK—INTERNAL VIEW FROM REAR

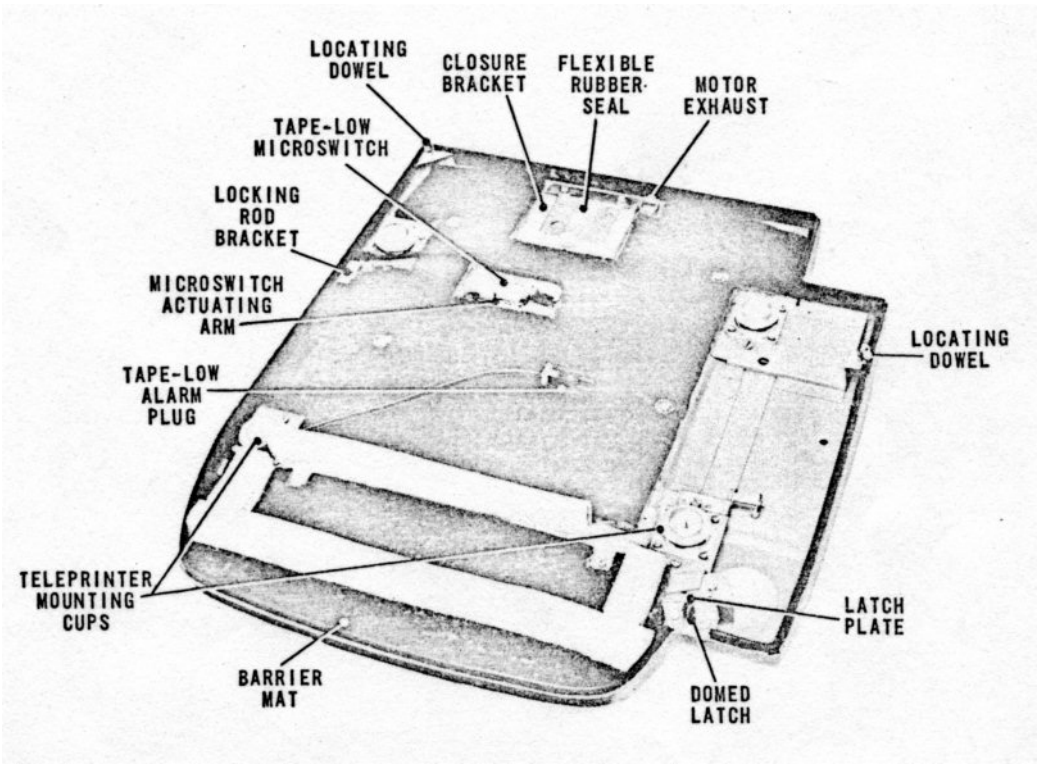


Fig. J.5 SILENCING COVER BASE FOR MODEL 75RP/TK

A rectangular slot is cut out of the rear panel of the top cover so enabling an external supply of paper to be fed into the teleprinter. The slot is covered by a paper inlet flap, Fig.J.3, which is designed to allow the paper to flow with the flap closed. The flap is hinged on a pivot pin and held in the closed position by the action of a spring on the pin.

A circular cut-out on the left-hand side of the top cover is provided for use when an external platen knob and extension is fitted to the machine. When this cut-out is not required it is covered over by a plastic blanking disc.

## Cover Mountings

For machines without a tape reader or reperforating attachment, the top cover is held fast to its base by two spring-loaded locking rods (one shown in Fig.J.3). These rods are located on the side panels of the cover and, when depressed and turned clockwise through 90°, engage with a bracket on the base.

For machines incorporating a tape reader and reperforating attachment, the cover is secured by the left-hand locking rod and by a domed latch, Fig.J.5, fitted on the base forward of the attachment. The cover is positioned by the engagement of two locating dowels on the base with brackets on the cover, and by the domed latch. When correctly positioned, the cover is secured by operating the locking rod, Fig.J.3, and moving the latch plate, Fig.J.5, to the horizontal position.

Provision is made for some lateral adjustment of the four machine mounting cups on which the feet of the enclosed teleprinter rest.

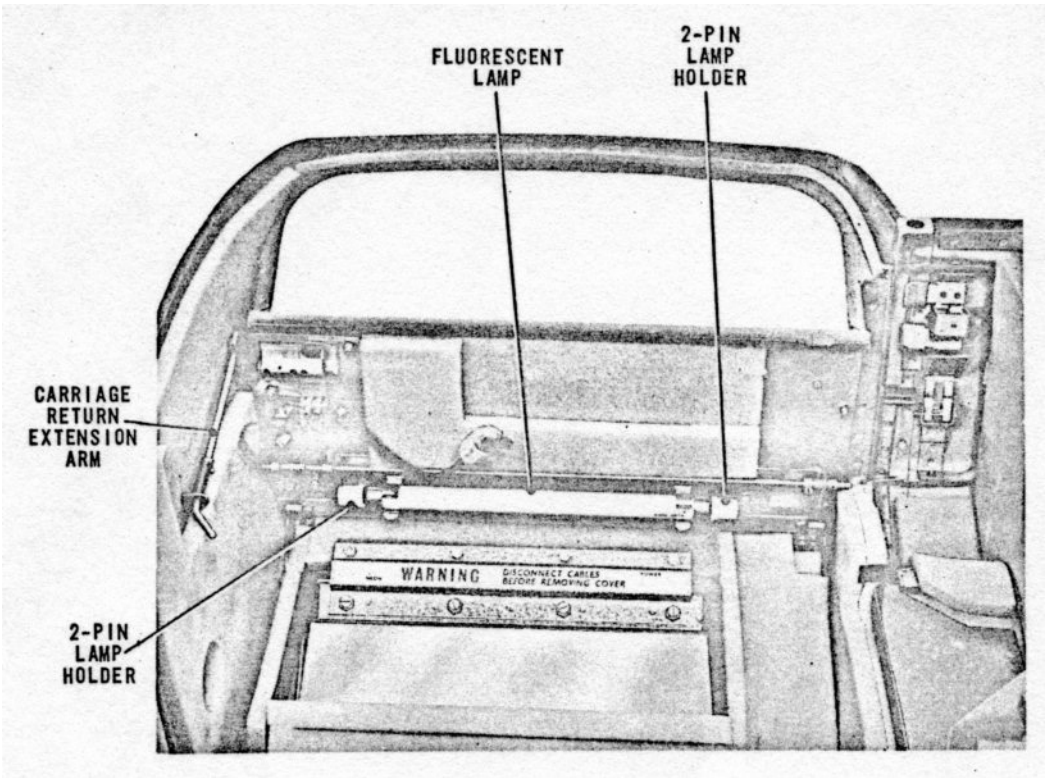


Fig. J.6 CONTROL BOX WITH COVER REMOVED

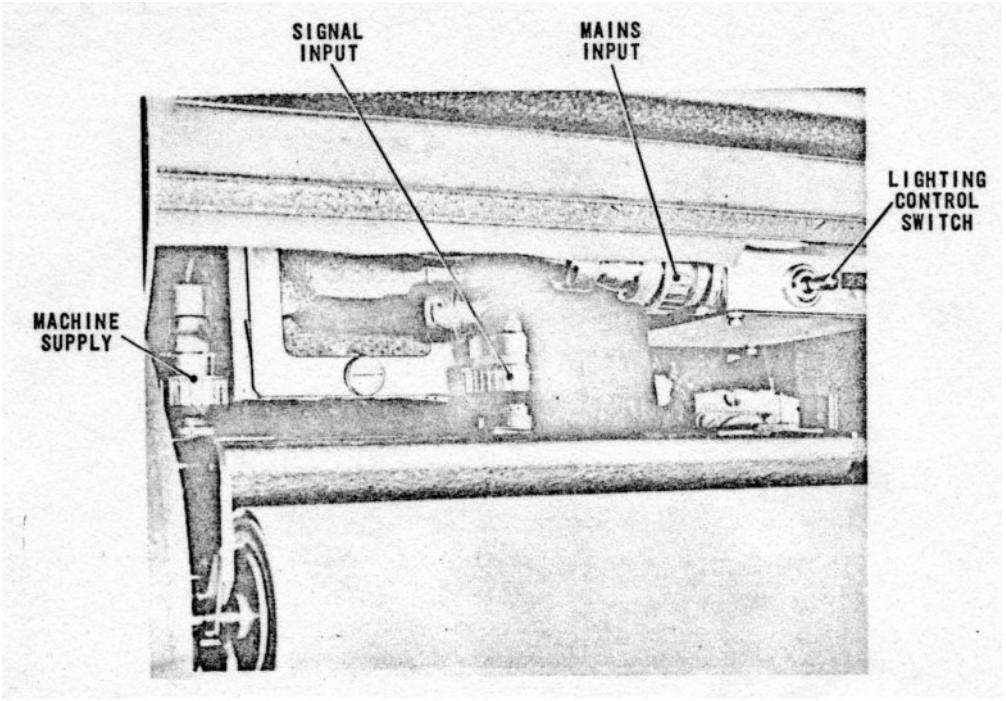


Fig. J.7 POWER AND SIGNAL CONNEXIONS

## Electrical System

Fig. J.6 illustrates the control box with its cover removed. Figs. J.7 and J.8 show the signal input, mains supplies, tape-low and end-of-line indicator connexions. A schematic diagram of the page lighting system is given in Fig. J.14.

The control box, Fig. J.6, contains the control components for the 6-watt fluorescent lamp, Fig. J.4, which is connected at each end by miniature 2-pin holders. The box also contains mains interconnexions for the teleprinter and lighting unit. A single-pole switch, Fig. J.7, mounted on the top of the box controls the lamp without affecting teleprinter operation.

Mains and signal input cables enter the base section of the silencing cover via a flexible rubber seal, Fig. J.5, and a clamping metal closure bracket which is secured by a special quick-release clip.

A 12- or 25-way socket, Fig. J.7, terminates the signal input cord and connects with its matching plug at the rear of the teleprinter. The mains input cord terminates with a 3-way socket and connects with its matching plug on the control box. A 3-way socket-terminated flying lead from the box forms the mains input cable for the teleprinter.

The teleprinter connexion for the neon end-of-line indicator lamp, Fig. J.2, is made via the flying lead and miniature 3-pin plug, Fig. J.8. Similarly, a 2-pin plug terminates the flying lead from the tape-low contacts of the microswitch, Fig. J.5.

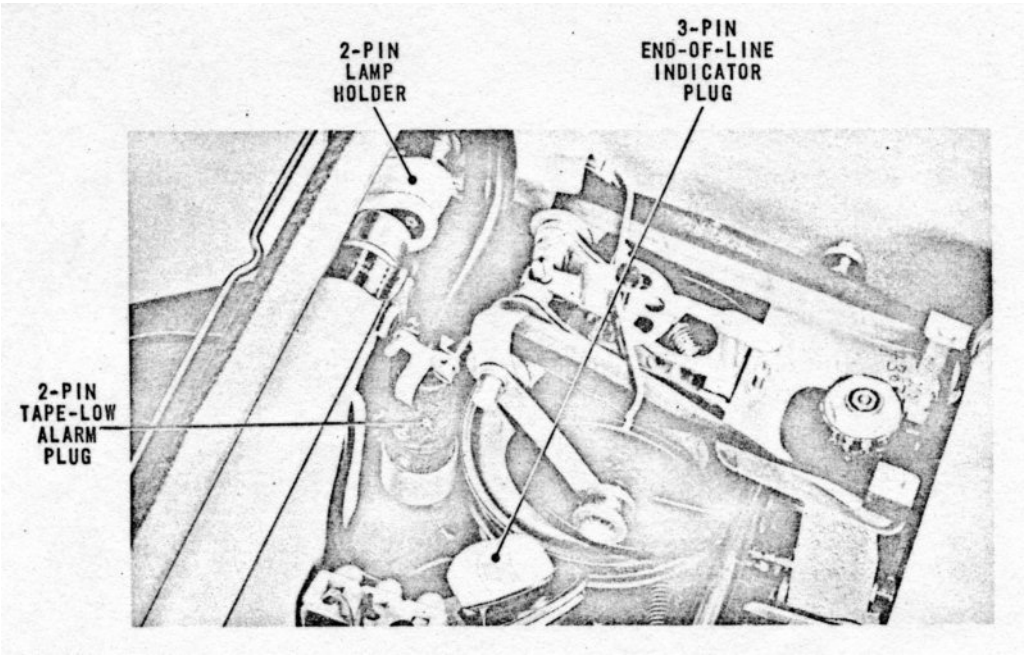


Fig. J.8 TAPE-LOW AND END-OF-LINE INDICATOR CONNEXIONS

## Tape Storage

Machines embodying a reperforating attachment incorporate a tape drawer, Fig. J.9, for the storage of the unused reel of tape. The drawer is positioned underneath the cover base. Figs. J.10 and J.13 show views of the mechanism on the underside and topside of the drawer respectively.

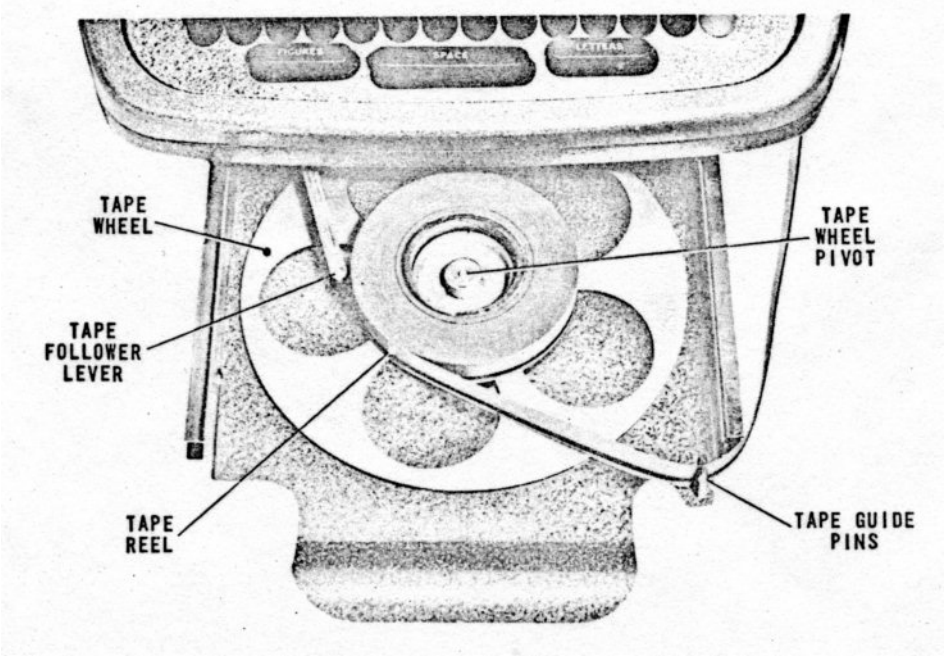


Fig. J.9 TAPE DRAWER

The tape drawer, Fig. J.9, contains the tape reel and the tape follower assembly that operates the tape-low microswitch, Fig. J.5. The drawer opens and closes on nylon wheels,

Fig.J.13, which slide on guides on the cover base. Stops integral with the guides prevent the drawer becoming detached from the base. In the closed position, the drawer is secured by the engagement of the two halves of a ball catch assembly, Fig.J.10, one half of which is fitted to the drawer and the other half to the base.

### Tape-Low Alarm

The neon indicator lamp, Fig.J.2, is operated by the tape-low microswitch, Fig.J.5, which is itself actuated by the movement of the spring-loaded tape follower lever, Fig.J.9, as it bears against the steadily-decreasing diameter of the tape reel. The tape follower assembly is adjustable so that the alarm can be set for varying diameters of the tape reel.

Operation is such that the tape follower lever abuts with a pivoting stop bracket assembly whose actuating arm, Fig.J.5, is responsible for closing the tape-low microswitch. Provision to adjust the angle between this arm and the tape follower lever, Fig.J.9, thus enables the sensing point of the lever to be advanced or retarded. The normal adjustment of this angle is for the lever to be set so that the microswitch operates the lamp when there is 1/4 in. of tape remaining on the reel.

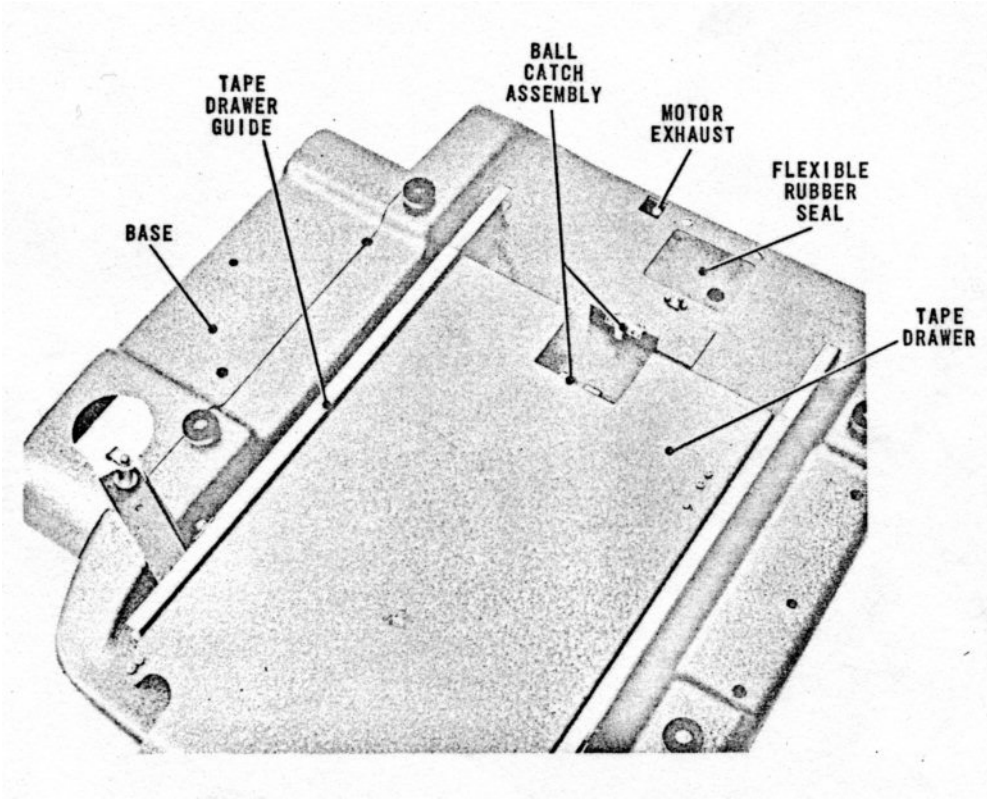


Fig. J.10 TAPE DRAWER AND BASE-UNDERSIDE VIEW

## 4. OPERATING INSTRUCTIONS

### Tape Loading

Since the tape for the reperforating attachment is housed in the base assembly of the silencing cover, it is necessary to reload the tape each time the teleprinter is separated

from the cover. Figs.J.9, J.11 and J.12 show the correct path and orientation of tape which should be reloaded as follows:-

(a) Open the tape drawer, Fig.J.9, and fit a reel of tape on to the tape wheel pivot. Ensure that the tape wheel revolves freely on its pivot.

(b) Draw out a length of tape and pass its end through the tape guide pins and up through the large circular cut-out section of the base. Check that the orientation of the tape at the guide pins is as shown in the figure.

(c) Without twisting, ease the tape (top edge first) between the outside surface of the first tape guide roller, Fig.J.11, and is retainer.

(d) Draw the tape carefully past the first tape guide roller and slowly close the tape drawer.

(e) Turn the tape clockwise through 90° and pass it between the second tape guide roller and its retainer, as shown in Fig.J.12.

(f) Pass the tape over the third tape guide roller and load the reperforating attachment in the manner described in the Model Seventy-five Operator's Handbook.

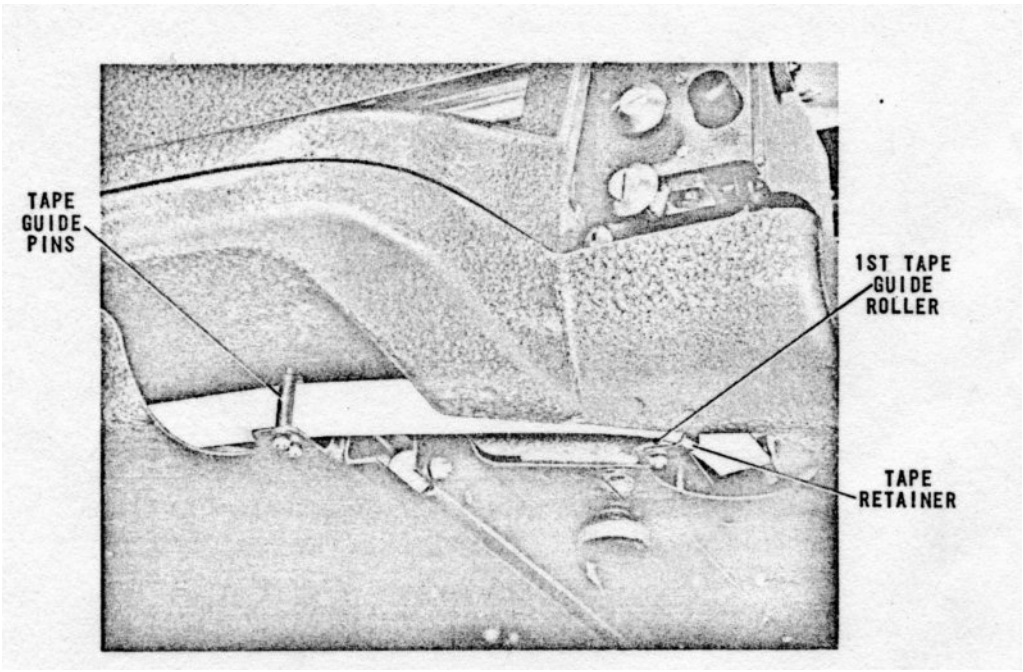


Fig. J.11 TAPE PATH—UNDERSIDE VIEW

## Paper Roll and Ribbon Replacement

The replacement procedures described in the Model Seventy-five Operator's Handbook apply for all silencing cover machines. Note that when replacing the paper roll however, it is necessary to feed the paper between the lid and the glass window flap before closing the lid. The paper must be held under slight tension when closing the lid, to prevent a loop forming inside the cover.

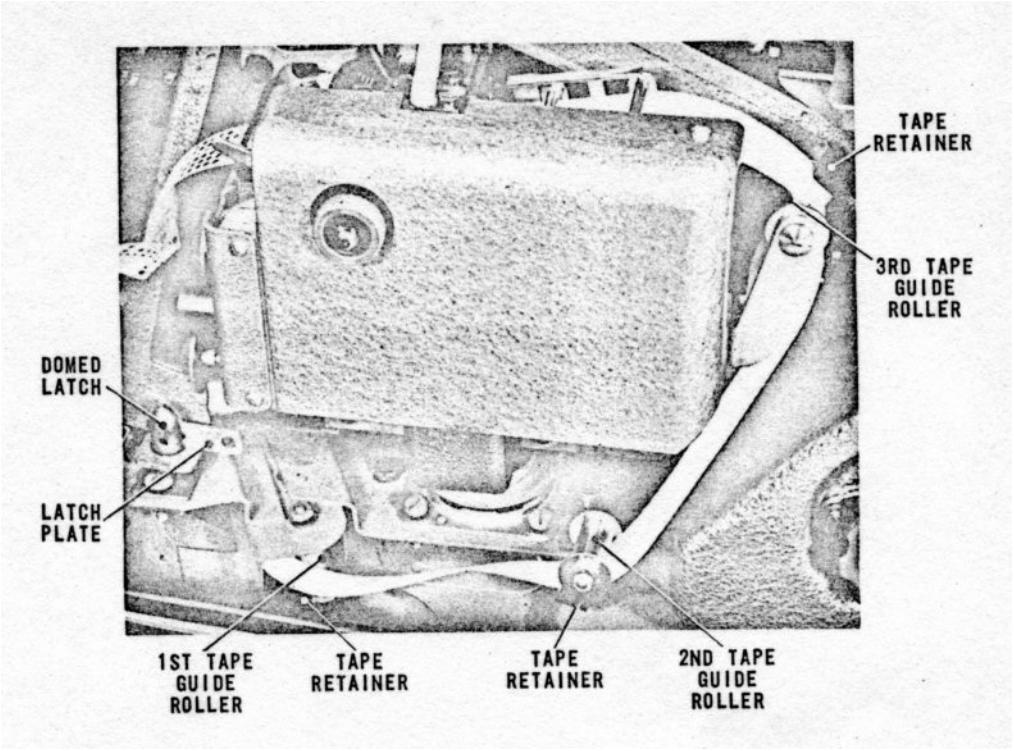


Fig. J.12 TAPE PATH—RIGHT-HAND VIEW

## 5. DISMANTLING INSTRUCTIONS

### Tape Cover Removal

■ Before attempting to remove the tape cover, it is essential to disconnect the three plugs and sockets interconnecting the teleprinter and top cover. This is the subject of a warning label attached to the inside of the lid.

(a) Open the lid and disconnect the mains input socket, Fig.J.7, from its plug at the control box, the machine supply socket at the rear of the teleprinter and the miniature 3-pin end-of-line indicator plug, Fig.J.8.

(b) For machines without a tape reader or reperforating attachment, turn the two locking rods, Fig.J.3, counter-clockwise through 90°.

(c) For machines incorporating a tape reader and reperforating attachment, turn the left-hand locking rod, Fig.J.3, counter-clockwise through 90° and press the latch plate, Fig.J.5, towards the domed latch. Open the blister door.

(d) Close the lid and carefully lift the cover clear of the machine.

### Base Removal

(a) Remove the top cover as described above.

(b) Disconnect the 12- or 25-way signals input socket, Fig.J.7, the adjacent rubber ventilating spout at its base assembly end and the miniature 2-pin tape-low plug, Fig.J.8.

(c) Take a firm grip on the sides of the teleprinter casting and lift the machine off its four cup mountings on the base. Never attempt to lift the machine by holding the tape drawer handle.

## 6. ADJUSTMENT INSTRUCTIONS

The following adjustment settings are designed to overcome any tolerance variations introduced during assembly and machine installation. Since there is little wear involved with any of the types of silencing cover therefore, it will normally only be necessary to check these settings when refitting the cover after removal.

### 1. Machine Mounting

Check

1.1 Check, by observation, that the cover is correctly aligned with the enclosed teleprinter, i.e.

(a) the keyboard mask lies centrally and symmetrically within the bordering lip of the top cover, and

(b) the reader attachment top plate is located parallel to but remains separate from the edge of the top cover cut-out.

Action

1.2 If adjustment is necessary, carry out the following procedure:-

(a) Remove the top cover and the teleprinter.

(b) Slacken the four screws securing each mounting cup, Fig.J.5, and temporarily refit the teleprinter and the top cover.

(c) Position the machine to satisfy the above checks and lock the cups at this setting with those screws that are accessible.

(d) Remove the teleprinter and top cover again and tighten the remaining mounting cup screws.

(e) Refit the teleprinter and top cover.

### 2. Window/Lid Clearance

Check

2.1 Check that the paper exit clearance between the rear edge of the window flap, Fig.J.2, and the surface of the lid is correct for the type of stationery to be used.

★ The optimum clearance when using single-ply paper is 0.15 in. This is approximately equal to four thicknesses of paper.

Action

2.2 To adjust, slacken the four locknuts and screws securing the window clamping plate, Fig.J.3, and position the window until the correct clearance is obtained. Tighten the screws and secure them with their locknuts.

### 3. Carriage Return Operation

Check

3.1 Operate the carriage return button, Fig.J.2, and check that a full button stroke is required to operate the teleprinter carriage return lever.

Action

3.2 If the carriage return mechanism operates prematurely, slacken the screw securing the teleprinter carriage return lever and adjust the radial position of the lever until the condition is satisfied. Tighten the carriage return lever screw.

4. Lid Release Operation

Check

4.1 Operate the lid release button, Fig.J.2, and check that the lid opens slowly and fully under the action of its two springs, Fig.J.3.

Action

4.2 To adjust, slacken the nuts securing the lid springs to the spring brackets and move the spring attachment points up or down the elongated slot in each bracket until the condition is satisfied. Tighten the nuts.

Check

4.3 Close the lid and check that it latches smoothly.

Action

4.4 If adjustment is necessary, carry out the following procedure:-

(a) Remove the top cover.

(b) Slacken the two screws securing each latch bracket and reposition the brackets until the condition is satisfied. Tighten the bracket screws.

(c) Refit the top cover.

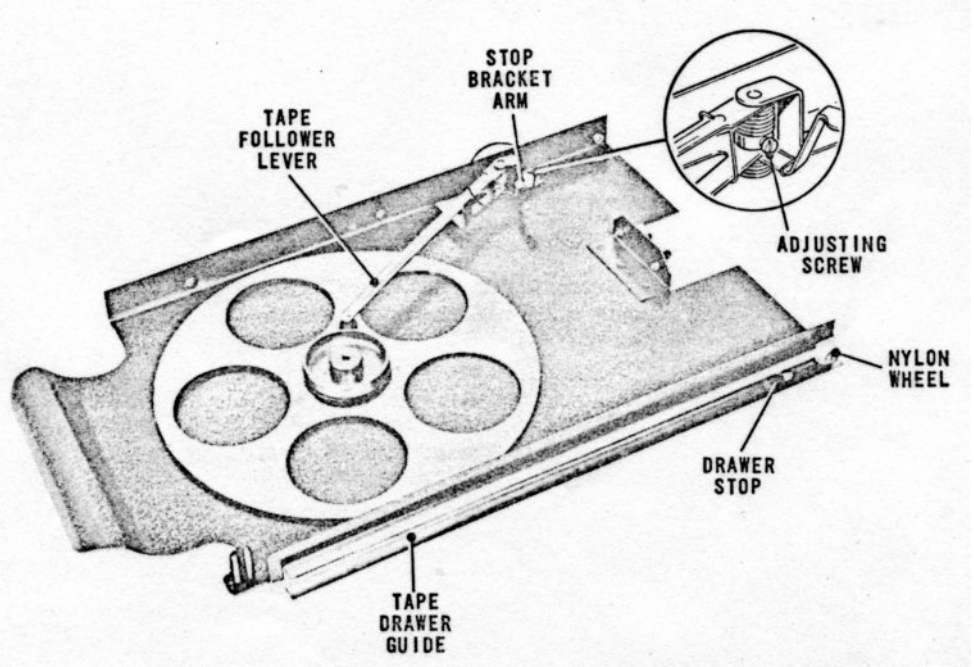


Fig. J.13 TAPE FOLLOWER MECHANISM

5. Tape-Low Alarm

Check

5.1 Check that the microswitch actuating arm, Fig.J.5, just operates the tape-low microswitch when there is the required thickness of paper (normally 1/4 in.) remaining on the tape reel.

Action

5.2 If necessary, slacken the adjusting screw, Fig.J.13-inset, and adjust the angle between the tape follower lever and the stop bracket arm to obtain the required condition. Tighten the adjusting screw.

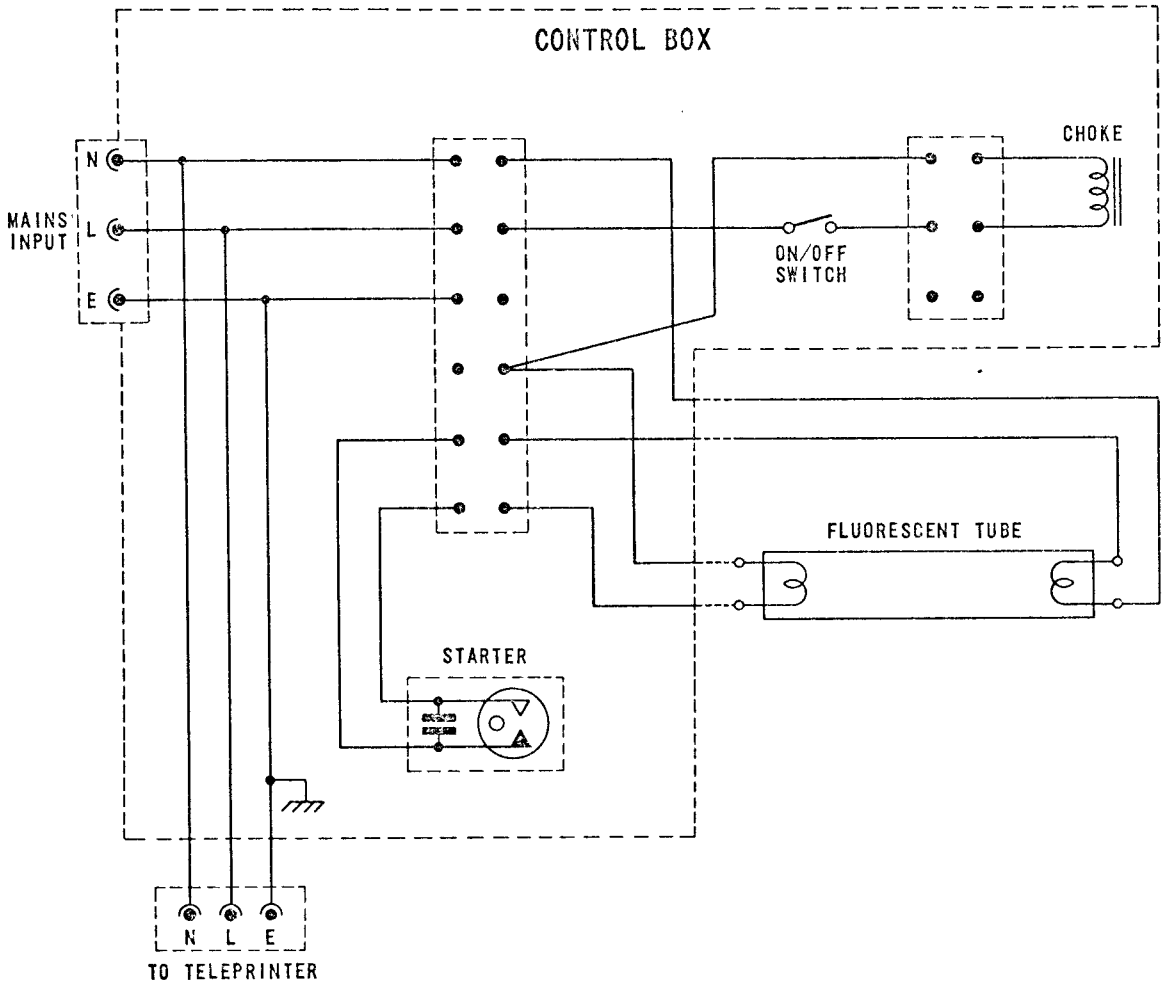


Fig. J.14 SCHEMATIC OF PAGE LIGHTING SYSTEM

15

16

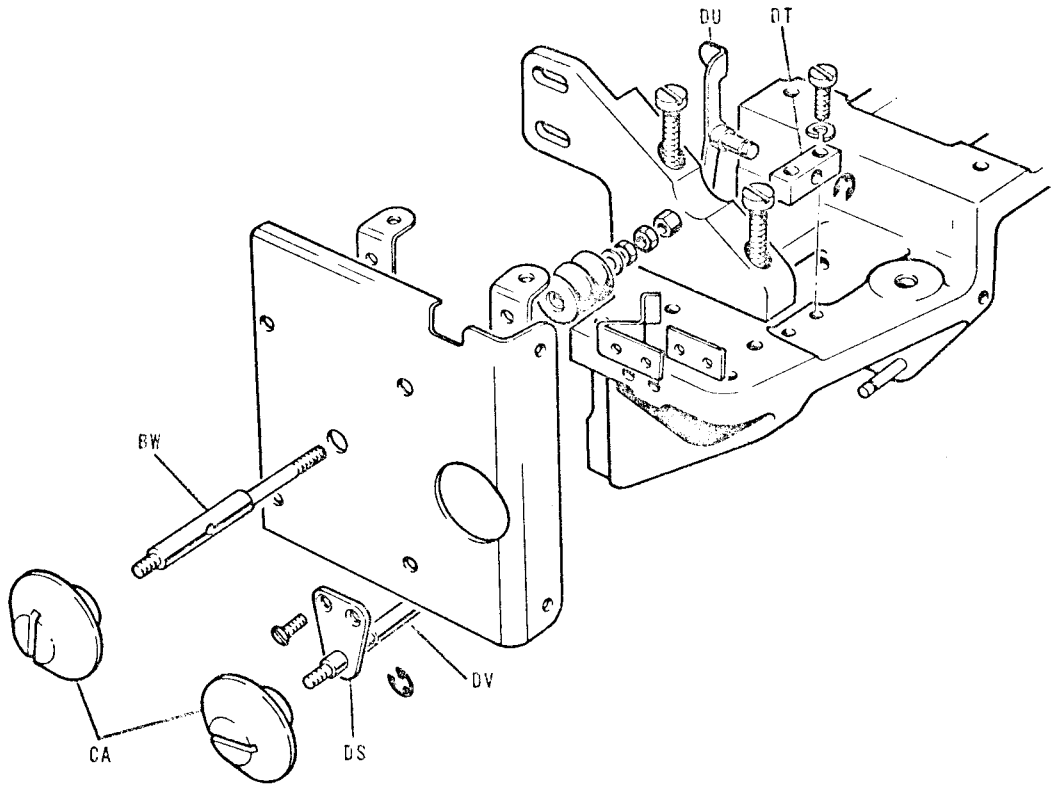


Fig. J.15 MODIFICATION TO REPERFORATING UNIT

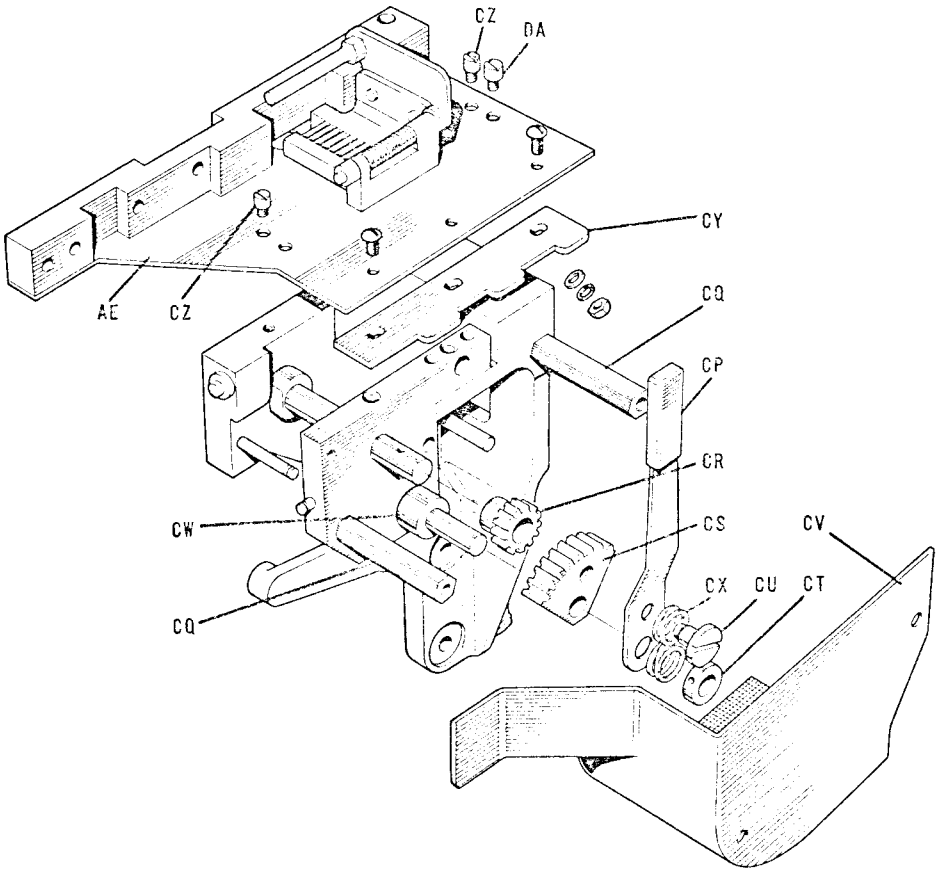


Fig. J.16 MODIFICATION TO TAPE READER UNIT

# PARTS LIST

The parts list is in two sections. Section 1 details the amendments necessary to Part 7 to cover the changes made to a standard machine when fitted in a Silencing Cover and Section 2 lists the replaceable parts of the Cover.

The Base, Top Cover and Blister are factory fitted and are not replaceable.

## SECTION 1 Amendments to EM75 Part 7

**Page 7**

| | | | |
|---|---|---|---|
| Delete Item | E | 4000/32 to 4151/240 | Keyboard Mask CP<br>Keyboard Mask CP |
| Insert Item | E | 4218/133 | Keyboard Mask Assembly *includes:-* |
| | | BO7800/2 | Grommet } *4 of each* |
| | | 4218/128 | Special Screw } *per assembly* |
| | | PW5670 | Special Washer *(8 per assembly)* |

**Pages 9 and 11**

| | | | |
|---|---|---|---|
| After Item F Insert | F | 4000/55 | Lamp Guard |
| | | BO3536/2 | 2-way Socket } *assembled to Item F when* |
| | | 4242/59 | Socket Clip } *Silencing Cover fitted* |

**Page 57**

| | | | |
|---|---|---|---|
| After Item Add | AR | PW5716 | Special Washer |
| | | 4218/17 | Motor Spout *(assembled to Item U when Silencing Cover fitted)* |

Page 63 Delete Items X and Y and insert the following -

| | | | |
|---|---|---|---|
| | ITEM X | 4218/38 | PLATEN KNOB FOR INTERNAL USE WITH SILENCING COVER |
| Page 83 | | 4004/241 | PLATEN KNOB C.P. included - } FOR EXTERNAL USE WITH SILENCING COVER |
| | Y | 4004/236 | PLATEN KNOB RETAINING SCREW } |

| | | | |
|---|---|---|---|
| Change Item | BW | PS7174 to PS7181 | |
| Change Item | CA | KN1034A to KN1039A | |

Add the following items *(See Fig.J.15)*

| *Index Letter* | *Part No.* | *Part Name* |
|---|---|---|
| DS | 4242/52 | Support Plate |
| DT | 4242/53 | Pivot Block |
| DU | 4242/54 | Reversing Lever CP |
| DV | ~~4242/1~~ 4242/8/42 | Button Rod CP *includes:-* |
| CA | KN1039A | Knob |

**Pages 87, 89 and 91**

| | | | |
|---|---|---|---|
| Change | | 4151/221 to 4151/259 | |
| Change Item | AE | 4151/124 to 4151/265 | |

Add the following items *(See Fig.J.16)*

| *Index Letter* | *Part No.* | *Part Name* |
|---|---|---|
| CP | 4151/275 | Lever CP |
| CQ | PP5671A | Pillar *(2 per assembly)* |
| CR | GR5183 | Pinnion |
| CS | 4151/268 | Quadrant |
| CT | PB1979 | Set Collar |
| CU | PS5750 | Shouldered Screw |
| CV | 4151/271 | Guard Plate |
| CW | EC1626 | Eccentric |
| CX | PW4013 | 3/16 in. Ph B Spring Washer *(2 per assembly)* |
| CY | 4151/306 | Control Lever Gate |
| CZ | PS7236 | Special Screw } *2 off for 11/16 in. wide tape and 1 off for 7/8 in. wide tape* |
| DA | PS7237 | Special Screw *(1 off for 7/8 in. wide tape)* |

Page

17

18

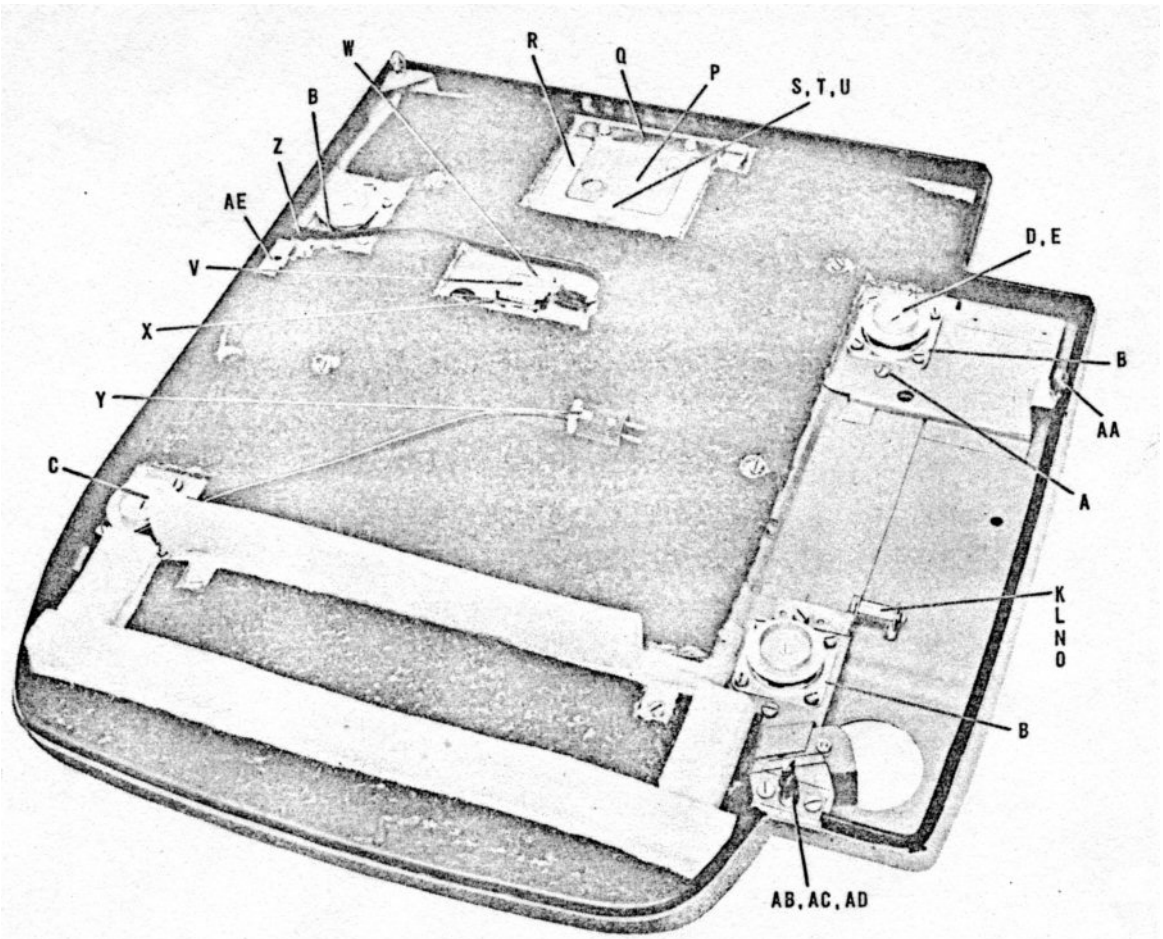


Fig. J.17 BASE ASSEMBLY (TOP VIEW)

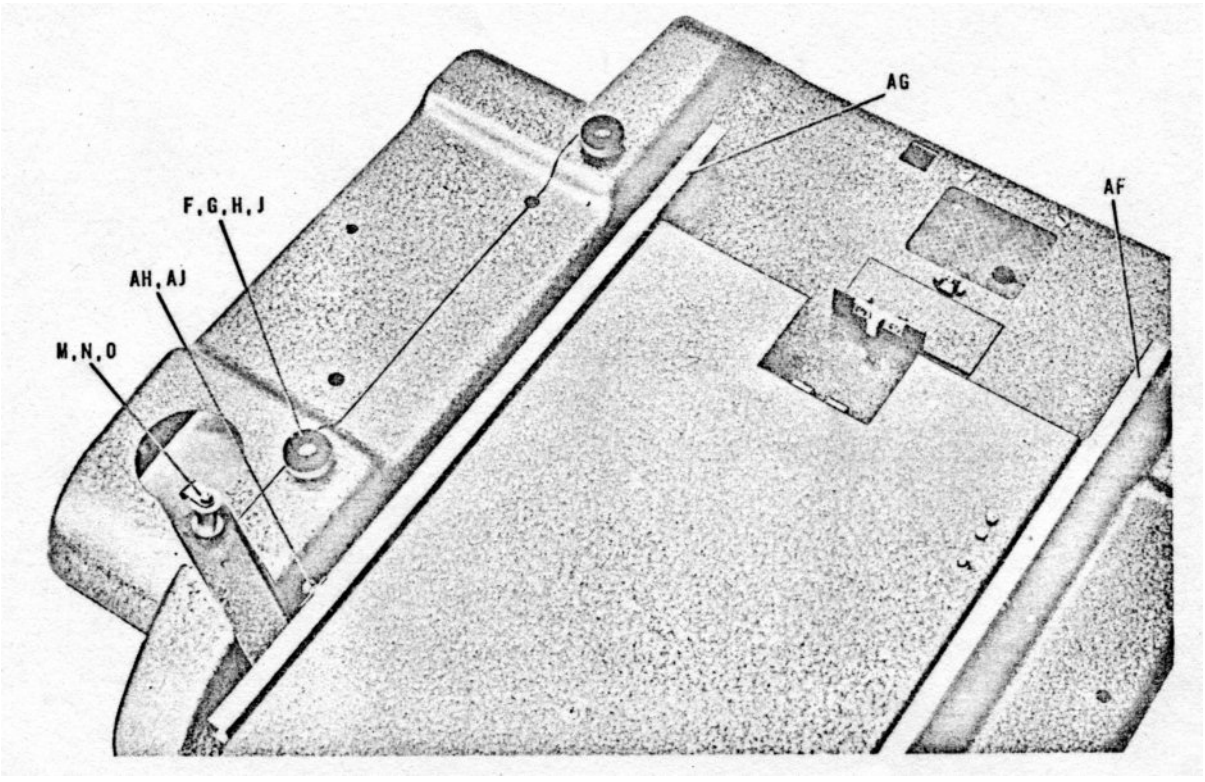


Fig. J.18 BASE ASSEMBLY (UNDERSIDE VIEW)

## SECTION 2

# SILENCING COVER PARTS

| *Index Letter* | *Part No.* | *Part Name* |
|---|---|---|
| BASE ASSEMBLY | | |
| MOUNTING FEET *(See Figs.J.17 and J.18)* | | |
| | E-346-113 | Captive Nut Plate *(4 per assembly) not visible, ffor securing items B and C* |
| A | E-346-115 | Shouldered Screw *(8 per assembly)* |
| | 4218/69 | Silentblock Mounting CP *(12 pounds) 3 per assembly* } *includes:-* |
| | 4218/70 | Silentblock Mounting CP *(6 pounds)* } *includes:-* |
| B | BO8212/10 | Resilient Mounting *(12 pounds) Silentbloc BSR12* |
| C | BO8212/7 | Resilient Mounting *(6 pounds) Silentbloc BSR6* |
| D | 4218/35 | Foot Cup |
| E | PW5850 | Foot Washer |
| F | 4218/104 | Adaptor } *4 of each per assembly* |
| G | 4218/105 | Foot Guard } *4 of each per assembly* |
| H | PB1007 | Collar } *4 of each per assembly* |
| J | RB1020 | Rubber Foot } *4 of each per assembly* |
| TAPE ROLLERS *(See Figs.J.17 and J.18)* | | |
| K | E-346-369 | Roller Bracket |
| L | PP9162 | Flanged Pin |
| M | E-346-461 | Roller Spindle |
| N | 3886/142 | Guide Roller } *2 of each per assembly* |
| O | E-346-573 | Tape Retainer } *2 of each per assembly* |
| CABLE ENTRY *(See Fig.J.17)* | | |
| P | 4218/62 | Rubber Seal |
| Q | 4218/34 | Closure Engage Plate |
| R | 4218/56 | Closure Bracket |
| S | BO2918/3 | Stud |
| T | BO2918/2 | Rubber Washer |
| U | 324 | Clip *(Oddie part number)* |
| TAPE EXHAUST ALARM *(See Fig.J.17)* | | |
| V | BO3563 | Miniature Microswitch |
| W | M8058 | Side Brackets *(2 per assembly) Bulgin Part number* |
| X | E-346-315 | Actuator Arm Assembly |
| Y | ~~501041~~ BO3537/2 | Plug *(Painton part number)* |
| Z | BO4063A/2 | Cable Clip *(2 per assembly)* |
| COVER LOCATORS *(See Fig.J.17)* | | |
| AA | E-346-269 | Locating Peg *(2 per assembly)* |
| AB | A-346-045 | Latch Assembly |
| AC | E-346-559 | Shim |
| AD | A-346-577 | Tapped Plate |
| AE | 324 | Clip *(Oddie part number)* |

19

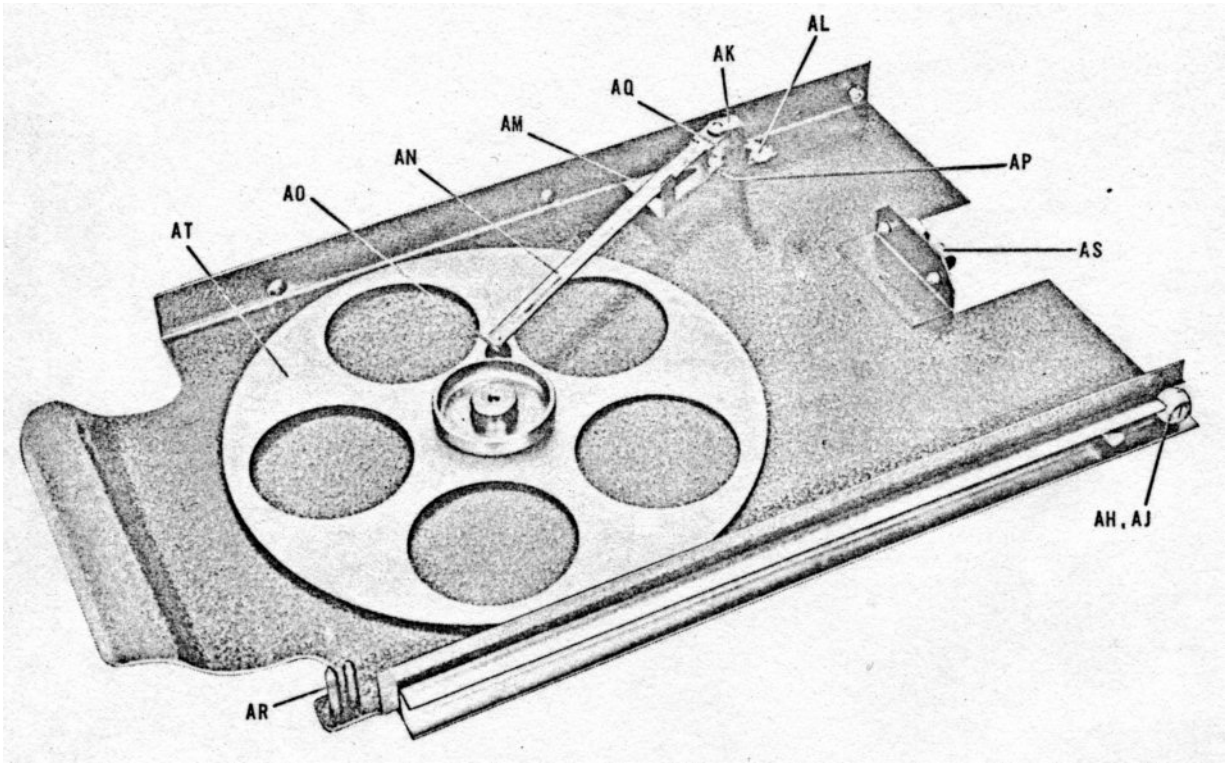


Fig. J.19 TAPE DRAWER

| *Index Letter* | *Part No.* | *Part Name* |
|---|---|---|
| TAPE DRAWER *(See Fig.J.19)* | | |
| AF | A-346-343 | Base Runner (LH) |
| AG | A-346-344 | Base Runner (RH) |
| AH | PS7166 | Pivot Screw } *2 of each per assembly* |
| AJ | RL1247 | Roller } |
| | C-346-032 | Tape Drawer Assembly *(for machines with a keyboard)* } *includes:-* |
| | *or* C-346-073 | Tape Drawer Assembly *(for machines without a keyboard)* } |
| AH | PS7166 | Pivot Screw } *2 of each per assembly* |
| AJ | RL1247 | Roller } |
| AK | E-346-323 | Bearing Bracket |
| AL | E-346-337 | Switch Operating Lever Assembly |
| AM | E-346-333 | Stop Frame Assembly |
| AN | E-346-329 | Tape Follower Lever Assembly |
| AO | 3751/3 | Roller |
| AP | E-346-349 | Spring |
| AQ | E-346-453 | Spring |
| AR | E-346-341 | Tape Guide Pin *(2 per assembly)* |
| AS | IE4201 | Ball Catch *(male and female parts) Imhof part number* |
| | 3886/173 | Handle *(used only on machines without a keyboard)* |
| AT | 4014/145A | Tape Wheel CP |

20

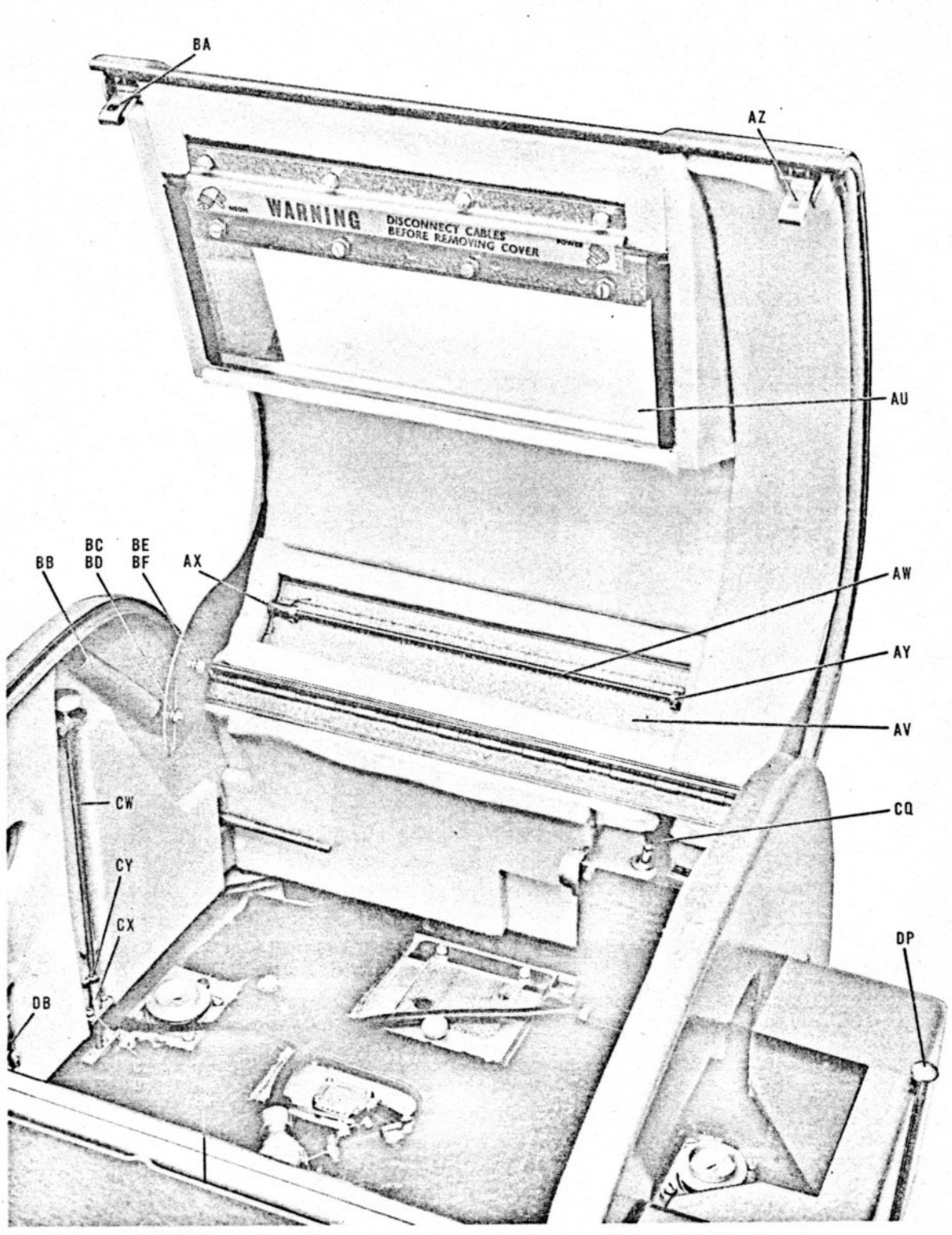


Fig. J.20 TOP COVER ASSEMBLY

| *Index Letter* | *Part No.* | *Part Name* | |
|---|---|---|---|
| TOP COVER ASSEMBLY | | | |
| LID ASSEMBLY *(See Fig.J.20)* | | | |
| AU | 4218/33 | Cover Window | |
| AV | A-346-119 | Paper Inlet Flap | |
| AW | E-346-143 | Flap Pivot Pin | |
| AX | E-346-151 | Flap Spring | |
| AY | E-346-129 | Bush *(2 per assembly)* | |
| AZ | 4218/40 | Cover Hook RH | |
| BA | 4218/67 | Cover Hook LH | |
| BB | PG3292 | Special Spring | *2 of each per assembly* |
| BC | PP6343 | Spring Anchor Pin | |
| BD | PB1313 | Collar | |
| BE | PS7165 | Lid Stop Screw | |
| BF | PB4853 | Rubber Buffer | |

21

22

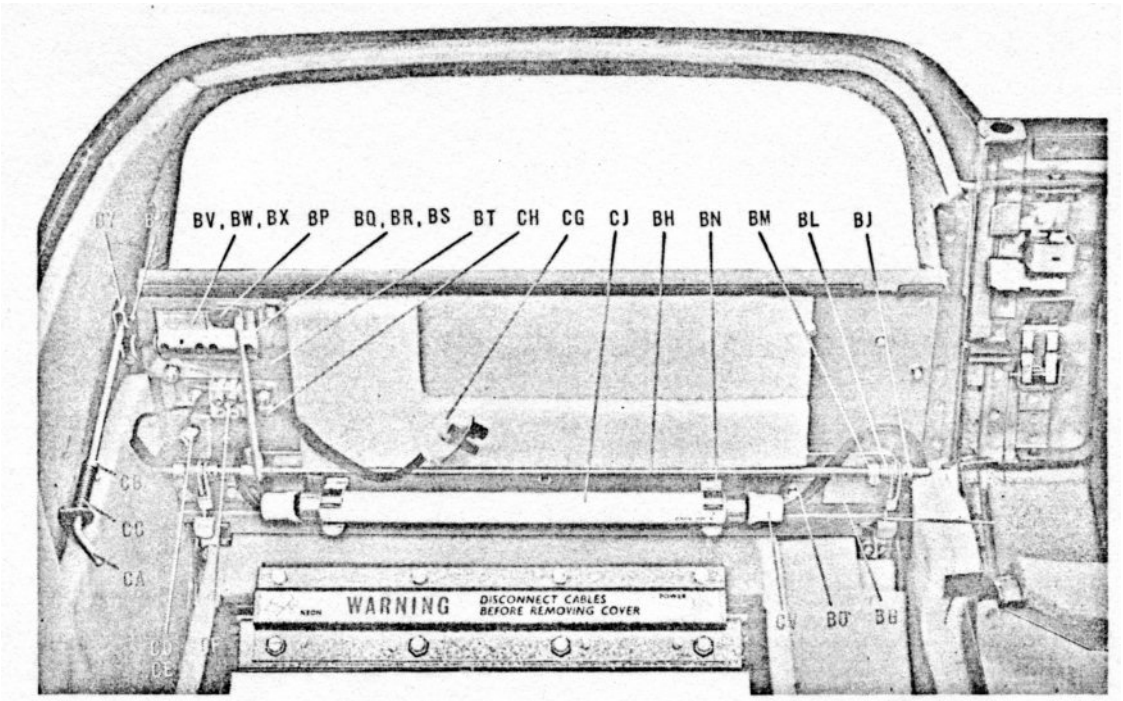


Fig. J.21 TOP COVER FRONT PANEL

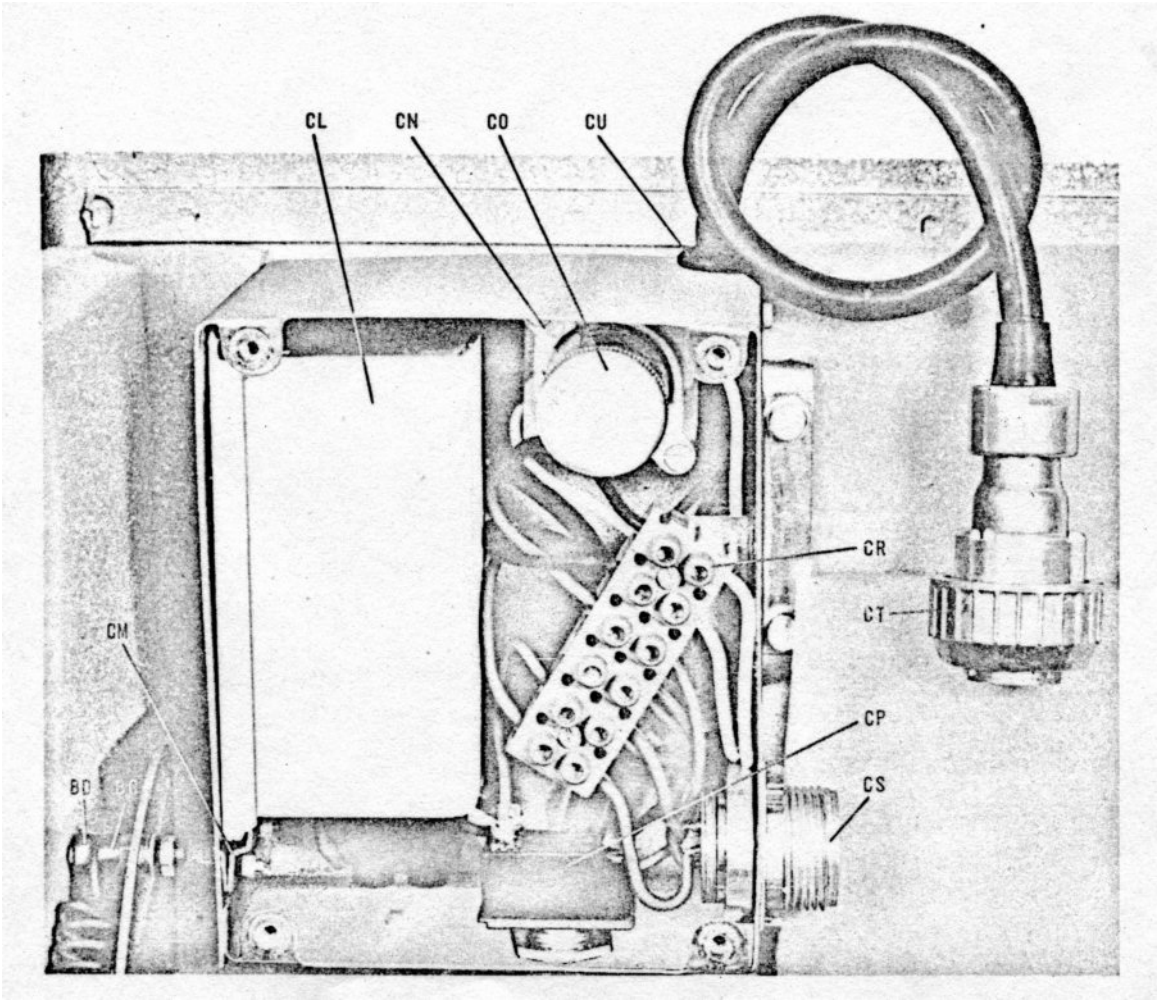


Fig. J.22 LIGHTING GEAR ASSEMBLY

| *Index Letter* | *Part No.* | *Part Name* | |
|---|---|---|---|
| LID SECURING ASSEMBLY *(See Fig.J.21)* | | | |
| | 4218/85 | Disengage Assembly *includes:-* | |
| BG | 4218/10 | Mounting Panel | |
| BH | 4218/41 | Disengage Shaft | |
| BJ | 4218/24 | Disengage Lever CP | 2 *of each per assembly* |
| BK | 4218/31 | Cover Retainer CP | |
| BL | PG3287 | Lever Return Spring | |
| BM | PB2020 | Collar | |
| BN | BO6470/3 | Terry Clip *(1/2 in. dia)* | |
| BO | 4218/47 | Stop Plate | |
| BP | E-346-311 | Disengage Arm | |
| BQ | 4218/55 | Knob Base | |
| BR | 4218/109 | Spacer | |
| BS | 4218/57 | Operating Button | |
| CARRIAGE RETURN BUTTON *(See Fig.J.21)* | | | |
| BT | 4218/52 | Control Panel LH | |
| BU | PP8064 | Button Pivot LH | |
| BV | 4218/55 | Knob Base | |
| BW | 4218/57 | Operating Button | |
| BX | 4218/109 | Spacer | |
| BY | 4218/37 | Adjustable Arm | |
| BZ | PP6340 | Fulcrum Pin | |
| CA | 4218/66 | Push Rod | |
| CB | PB1313 | Collar | |
| CC | PG3286 | Compression Spring | |
| NEON LAMP ASSEMBLY *(See Fig.J.21)* | | | |
| | 4218/84A | Neon Lamp Assembly *includes:-* | |
| CD | 4218/65 | Neon Lamp Bracket | |
| CE | ~~BO4063/3~~ 4036/3 | Neon Lamp (for 230 Volts) | |
| *or* | ~~BO4063/2~~ 4036/2 | Neon Lamp (for 100/130 Volts) | |
| CF | CB1157 | Terminal Strip (2-way) | |
| CG | BO7713/1 | 3-way Plug *(Belling-Lee L1436/P)* | |
| CH | PK2029 | Cable Clip | |
| INTERIOR LIGHT *(See Fig.J.21)* | | | |
| CJ | BO6470/6 | Fluorescent Tube (9 inch 6W, warm white) | |
| COPY HOLDER *(See Fig.J.20)* | | | |
| CK | 4218/88 | Retaining Bar CP | |
| | A-346-367 | Message Rest | |
| LIGHTING GEAR ASSEMBLY *(See Fig.J.22)* | | | |
| | C-346-050 | Lighting Gear Assembly *includes:-* | |
| CL | BO6470/2 | Choke (for 230/250 Volts) *GEC F8334* | |
| *or* | BO6470/7 | Choke (for 100/115 Volts) *GEC IE.2/6600* | |
| CM | 4218/43 | Clamp | |
| CN | BO6470/7 | Starter Socket *(for 230/250 Volts)* | |
| *or* | BO6470/2 | Starter Socket *(for 100/115 Volts)* | |
| CO | BO6470/1 | Starter Switch *(GEC OS14)* | |
| CP | BO2663 | Switch | |
| CQ | BO7800/4 | Grommet | |
| CR | BO7782 | Terminal Strip *(6-way)* | |
| CS | BO3816/1 | 3-way Plug | |
| CT | BO3812 | 3-way Socket | |
| CU | BO7800/3 | Grommet | |
| CV | BO6470/4 | Bi-Pin Holder *(GEC Z.LH417)* | |
| COVER FASTENER *(See Fig.J.20)* | | | |
| CW | 4218/30 | Oddie Rod | |
| CX | PG5180 | Compression Spring | |
| CY | PB1313 | Collar | |
| CZ | 4227/9 | Bracket | |
| DA | E-346-565 | Guide Plate | |
| DB | 4218/51 | Machine Stop | |

23

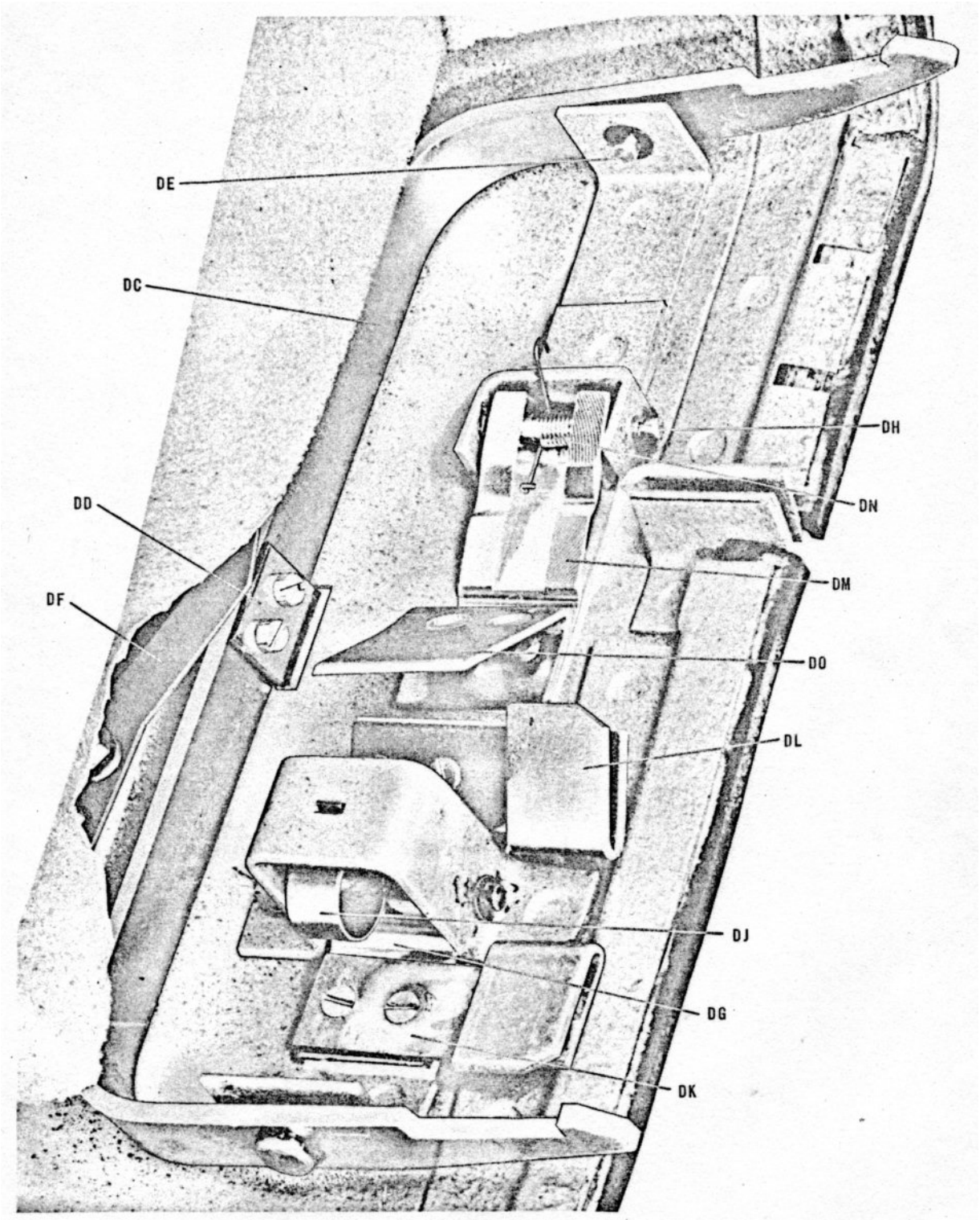


Fig. J.23 REPERFORATING AND TAPE READER ATTACHMENT COVER

| *Index Letter* | *Part No.* | *Part Name* |
|---|---|---|
| REPERFORATING AND TAPE READER ATTACHMENT COVER *(See Fig.J.23)* | | |
| | E-346-435 | Door Spring *(secured to Main Cover)* |
| DC | A-346-295 | Catch Lever |
| DD | E-346-287 | Finger Plate |
| DE | E-346-375 | Catch Pivot Pin *(2 per assembly)* |
| DF | E-346-455 | Door Catch Spring |
| DG | A-346-299 | On-Off Button |
| DH | E-346-283 | Button Spindle *(2 per assembly)* |
| DJ | E-346-415 | On-Off Switch Spring |
| DK | E-346-563 | Upper Button Transfer Arm |
| DL | E-346-564 | Lower Button Transfer Arm |
| DM | A-346-297 | Back Space Button |
| DN | E-346-417 | Button Return Spring |
| DO | E-346-285 | Button Plate |
| DP | E-346-391 | Hinge Pin Assembly |

# APPENDIX L

## MODEL PR SEVENTY-FIVE PRINTING REPERFORATOR

# APPENDIX L

## 1. INTRODUCTION

This appendix provides maintenance, lubrication and adjustment instructions and parts list for the Printing Reperforator version of the Creed Model Seventy–five Teleprinter.

## 2. MAINTENANCE INSTRUCTIONS

Routine maintenance of the Printing Reperforator version of the Model Seventy–five should be carried out, where applicable, in accordance with the instructions given in Part 3, pages 1 – 10. Additional maintenance instructions, applicable only to a printing reperforator, are given below.

| | |
|---|---|
| SHORT TERM | 1000 hours of operation<br>at 50 bauds, or<br>2400 operation counter units |

1 Perforator Unit

1.1 Examine the surface of the platen for wear and, if necessary, renew the platen as follows:–

(a) Disconnect the five springs securing the selector levers, Fig.L.1, to the selector cable block.

(b) Remove the two screws securing the cable block to the selector frame. Hold the frame securely in position, gently ease out the cable block and then immediately refit the outer screw back into the frame, as shown in the figure. This is to ensure that the trunnion blocks and spacers inside the frame remain in their correct positions.

(c) Disconnect the spring between the pin on the punch shaft and the anchor pin on the main base.

(d) Remove the screw securing the punch shaft to its spindle and withdraw the spindle together with its collar.

(e) Carefully slide the punch shaft away from the selector frame.

(f) Remove the two screws securing the punch block to the unit casting. Withdraw the punch block together with the selector frame assembly away from the platen.

(g) Remove and discard the circlip securing the platen and take off the platen.

(h) Insert a new platen and secure it with a new circlip

(j) Refit the punch block and selector frame assembly and secure the block with its two screws.

(k) Slide the punch shaft into position Insert the punch shaft spindle into the shaft and secure the shaft to the spindle with its screw .

(l) Re–connect the spring between the pin on the punch shaft and the anchor pin on the main base.

(m) Hold the selector frame in position and withdraw the screw temporarily inserted for this purpose. Refit the selector cable block to the frame and secure it with its two screws.

(n) Re–connect the five springs securing the selector levers to the selector cable block.

1.2 Inspect the punches for wear. If the tips are slightly rounded, remove the punches and sharpen them with a lapping block (Creed Part No. TA 1301) and oilstone (Creed Part No. 16816) If the tips show excessive wear, renew the punches as follows:–

(a) Disconnect the five springs securing the selector levers, Fig.L 1, to the selector cable block.

(b) Remove the two screws securing the cable block to the selector frame Hold the frame securely in position, gently ease out the cable block and them immediately refit the outer screw back into the frame, as shown in the figure This is to ensure that the trunnion blocks and spacers inside the frame remain in their correct positions.

(c) Disconnect the spring between the pin on the punch shaft and the anchor pin on the main base

(d) (d) Remove the screw securing the punch shaft to its spindle and withdraw the spindle together with its collar

(e) Carefully slide the punch shaft away from the selector frame

(f) Slacken the two screws securing the cuttings chute and take off the chute

(g) Remove the capstan–headed screw securing the feed link, Fig.L 10, to the punch block and take off the link.

(h) Remove the two screws securing the punch block, Fig.L 1, to the unit casting Withdraw the punch block together with the selector frame assembly.

(j) Remove the two screws securing the punch cover plate, Fig L.2, and take off:–

(i) the cover plate
(ii) two die plates
(iii) tape guide plate, and
(iv) four die plates

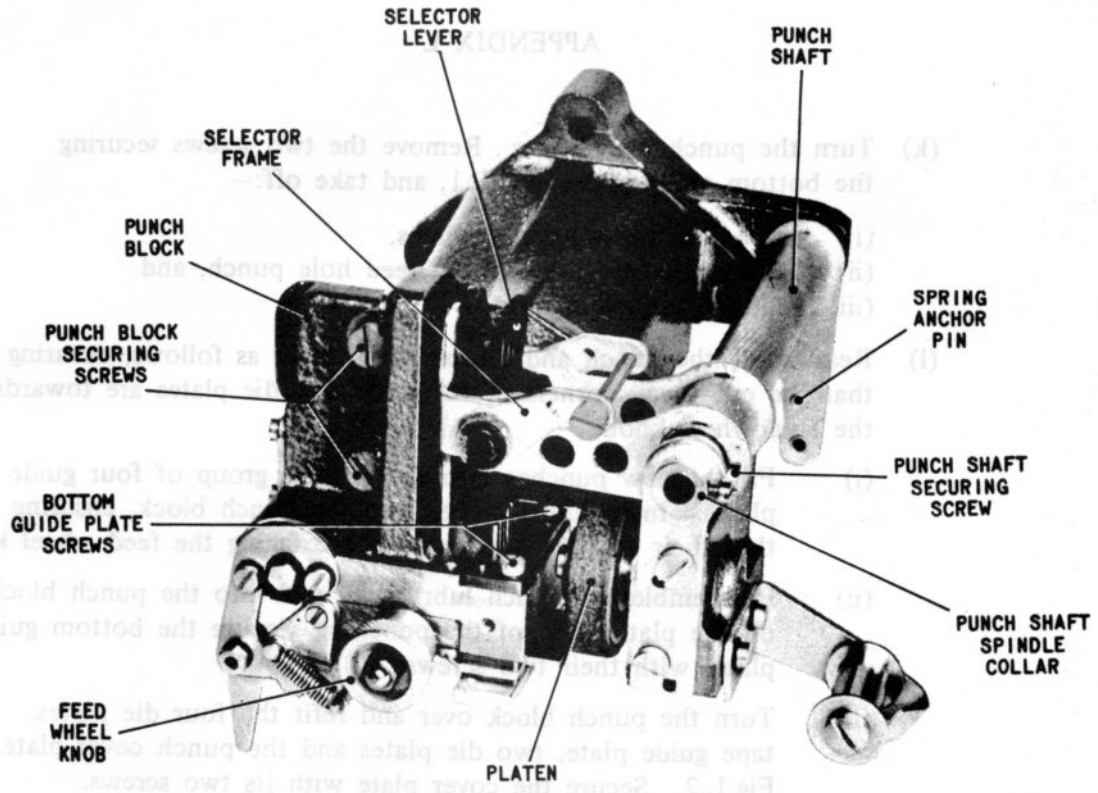


FIG.L.1 SELECTOR LEVERS ASSEMBLY

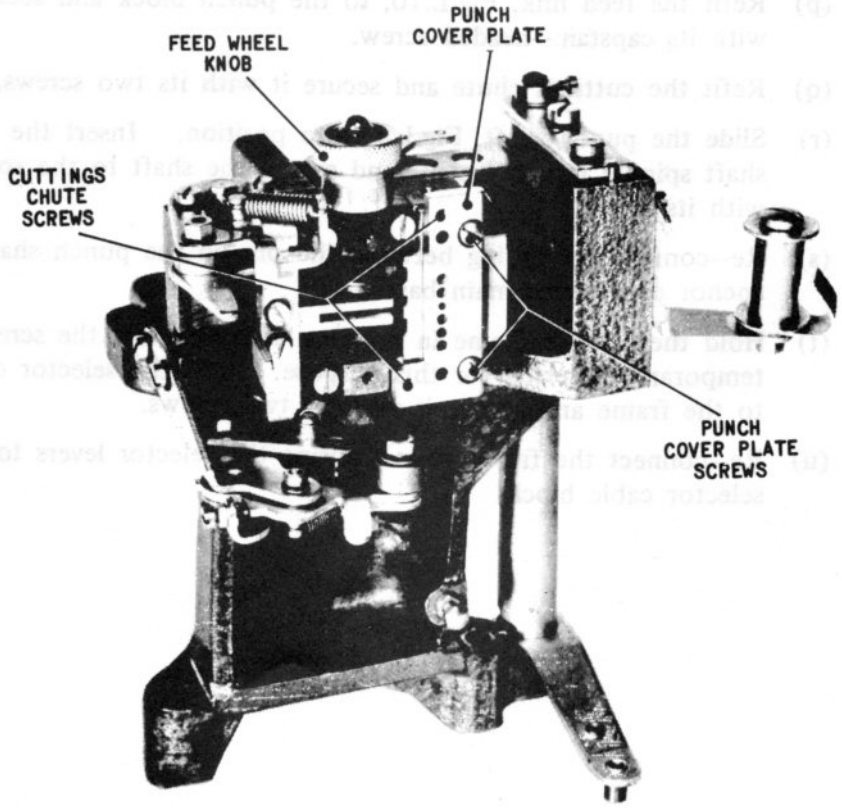


FIG.L.2 PERFORATOR UNIT

(k) Turn the punch block over. Remove the two screws securing the bottom guide plates, Fig.L.1, and take off:–

(i) the four bottom guide plates,
(ii) five code punches and the feed hole punch, and
(iii) punch lubrication pad.

(l) Reassemble the punch and die plate assembly as follows, ensuring that the cut–away corners of the guide and die plates are towards the feed wheel knob.

(i) Fit the new punches into the bottom group of four guide plates. Insert the punches into the punch block, ensuring that their flat cut–out surfaces are facing the feed wheel knob.

(ii) Reassemble the punch lubrication pad into the punch block on the platen side of the punches. Secure the bottom guide plates with their two screws.

(iii) Turn the punch block over and refit the four die plates, tape guide plate, two die plates and the punch cover plate, Fig.L.2. Secure the cover plate with its two screws.

(m) Check that the punches are free to move in the punch block.

(n) Refit the punch block and selector frame assembly and secure the block with its two screws.

(p) Refit the feed link, Fig.L.10, to the punch block and secure it with its capstan–headed screw.

(q) Refit the cuttings chute and secure it with its two screws, Fig.L.2.

(r) Slide the punch shaft, Fig.L.1, into position, Insert the punch shaft spindle into the shaft and secure the shaft to the spindle with its screw.

(s) Re–connect the spring between the pin on the punch shaft and the anchor pin on the main base.

(t) Hold the selector frame in position and withdraw the screw temporarily inserted for this purpose. Refit the selector cable block to the frame and secure it with its two screws.

(u) Re–connect the five springs securing the selector levers to the selector cable block.

## 3. LUBRICATION INSTRUCTIONS

Periodic lubrication of the Printing Reperforator version of the Model Seventy–five should be carried out, where applicable, in accordance with the pictorial lubrication instructions given in Part 3, pages 11 – 32. Additional lubrication points, applicable only to a printing reperforator, are given below.

| | |
|---|---|
| SHORT TERM | 1000 hours of operation at 50 bauds, or 2400 operation counter units |

| Lubricant | Lubrication Point and Quantity | Reference |
|---|---|---|
| Creed No. 2 | (1) Lightly lubricate all pivots, friction faces, bearings, couplings and felts, paying special attention to the following:– | |
| | Perforator Unit | |
| | (a) Retention lever pivot and roller | AN, Fig.L.48 |
| | (b) Feed pawl pivot | AW, Fig.L.49 |
| | (c) Back space lever pivot | AD, Fig.L.48 |
| | (d) Back space pawl pivot | AH, Fig.L.49 |
| | (e) Throwout lever pivot | AF, Fig.L.49 |
| | (f) Selector levers pivot pin | T, Fig.L.47 |
| | (g) Slot in selector assembly bearing plate | E, Fig.L.47 |
| | Selector Cables Unit | |
| | (h) Transfer lever spindle | M, Fig.L.42 |
| | (j) Selector cables lubricating pad | O, Fig.L.27 |
| | Main Base | |
| | (k) All couplings, pivots and felts of punch link assembly | T, Fig.L.32 |
| | (l) All couplings, pivots and felts of feed link assembly | BR, Fig.L.30 |
| | (m) All bearings, pivots, felts, cams and rollers of run out shaft assembly | AD, Fig.L.30 |
| | (n) All bearings, pivots and detents of run out trip levers assembly | BM, Fig.L.30 |
| | (p) Pivots of run out connecting link | BV, Fig.L.30 |

| Lubricant | Lubrication Point and Quantity | Reference |
|---|---|---|
| Creed No. 2 | Translator Unit | |
| | (q) Run Out disablement pin pivot and felt washer | AA, Fig.L.34 |
| | (r) Bearings and felts of tape feed suppression shaft | D, Fig. L.34 |
| | Selector Unit | |
| | (s) Starter trip lever pivot | AG, Fig.L.27 |
| | General | |
| | (t) Pivots of all tape guide rollers | |
| | (u) All spring anchors | |
| | (2) Fill all oil cups and oil holes, paying special attention to the following:- | |
| | Perforator Unit | |
| | (a) Bearing blocks of tape feed spindle | U, Fig.L.48 |
| | (b) Punches | |
| | (c) Bearings of punch shaft | BG, Fig.L.47 |
| | Selector Cables Unit | |
| | (d) Selector Cable block (translator end) | C, Fig.L.42 |
| | (e) Selector Plunger block (perforator end) | A, Fig.L.42 |
| | Main Base | |
| | (f) Bearings at each end of run-out shaft | AD, Fig.L.30 |
| | (g) Bearings of compensator cam lever | BF, Fig.L.30 |

## 4. ADJUSTMENT INSTRUCTIONS

The adjustments necessary for the Printing Reperforator version of the Model Seventy-five teleprinter comprise:-

(a) those adjustments to a standard Model Seventy-five teleprinter which also apply to the Reperforator.

(b) those adjustments which have the same designation as those of a standard Model Seventy-five teleprinter but which have a slightly different context applied to the Reperforator, and

(c) additional adjustments which apply only to the Reperforator.

## APPENDIX L

A Key, based on the Contents List of Part 4, is given below and will identify (a) above. Adjustments classified in (b) and (c) will be found immediately following the Key.

### KEY

| | | |
|---|---|---|
| 1. | Armature Stop Bracket | As for Part 4 |
| 2. | Centralising Springs | |
| 3. | Clutch Trigger Backstop Clearance | |
| 4. | Clutch Abutment Engagement | |
| 5. | Function Bar Reset | |
| 6. | Print Release Lever | |
| 7. | Case Shift Lever – Vertical Position | |
| 8. | Case Shift Lever – Horizontal Position | |
| 9. | Non–Print Hook | |
| 10. | Letter Feed Latch | Not Applicable |
| 11. | Carriage Return Latch | |
| 12. | Selector Drive Shaft End–Play | As for Part 4 |
| 13. | Starter Switch–Operating Link | |
| 14. | Starter Switch Spindle | |
| 15. | Starter Switch Hold–out Lever | |
| 16. | Starter Switch Hold–out Bush | |
| 17. | Corrector Backstop | |
| 18. | Governor Contacts Clearance | |
| 19. | Governor Contact Assembly Location | |
| 20. | Keybar/Combination Bar Clearance | |
| 21. | Trip Lever Pivot | |
| 22. | Push Rod Lift | |
| 23. | Contact Springs | |
| 24. | Latch Trip Lever | |
| 25. | Lag Disc Clearance | |
| 26. | Release Lever Lift | |
| 27. | Release Lever Trip Arm Engagement | |
| 28. | Translator Clutch | |
| 29. | Pin–Box Traverse Multiplying Lever | |
| 30. | Pecker Retention Arm | Not Applicable |

| | |
|---|---|
| 31. Selector Detent Clearance | As for Part 4 |
| 32. Selector Camshaft Retention Lever | |
| 33. Selector Clutch | |
| 34. Selector Rockshaft End–Play | |
| 35. Translator Trip Operating Lever Stop | |
| 36. Translator Clutch Trip | |
| 37. Starter Trip from Electromagnet | |
| 38. Starter Trip from Translator Clutch | |
| 39. Pecker/Code Selection Pin Clearance | |
| 40. Pecker Traverse | |
| 41. Carriage Return Pawl Lift | Not applicable |
| 42. Line Feed Lever Stop Plate | |
| 43. Friction Feed Platen | |
| 44. Sprocket Feed Platen | |
| 45. Paper Guide Retainers | |
| 46. Line Feed Pawl Overthrow Stops | |
| 47. Platen Retention Pawl | |
| 48. Typehead Carriage End–Play | |
| 49. Typehead Carriage Stop Screw and Pawl Latch | |
| 50. Feed and Retention Pawl Height | |
| 51. Typehead Carriage Feed Link | |
| 52. Carriage Return Spring | |
| 53. Dashpot | |
| 54. Print Spring | |
| 55. Typehead/Platen Clearance | As for Part 4 |
| 56. Print Beam Stop Screw | |
| 57. Typehead Corrector | |
| 58. Typehead Corrector Track Rail | Not applicable |
| 59. Typehead Height–Initial Setting | As for Part 4 |
| 60. No.5 Aggregate Motion Lever | |
| 61. No.4 Aggregate Motion Lever | |
| 62. No.1 Aggregate Motion Lever | |
| 63. No.3 Aggregate Motion Lever | |
| 64. Typehead Height–Preliminary Setting | |
| 65. Ribbon Spool Damping | |
| 66. Ribbon Spool Clearance | |
| 67. Ribbon Unit Pawls | |
| 68. Ribbon Jumper Arm | Not applicable |

| | |
|---|---|
| 69. Keyboard Combination Bar Reset | As for Part 4 |
| 70. Keyboard Trip Lever Pivot–Dynamic Check | |
| 71. Selector Bar/Selection Pin Alignment | |
| 72. Selector Bar/Selection Pin Clearance | |
| 73. Lag Weight Release Lever Stop | |
| 74 Lag Weight Trip | |
| 75. Lag Weight Movement | |
| 76. Translator Trip from Lag Weight | |
| 77. Send–Receive Delay Lever Clearance | |
| 78. Send–Receive Switch Contacts | |
| 79. Send–Receive Contact Delay | |
| 80. Send–Receive Contact Delay–Dynamic Check | |
| 81. Motor Speed | |
| 82. Transmitter Contacts and Signals Length (TDMS) | |
| 83. Transmitter Contacts and Signals Length (Timing Disc) | |
| 84. Lag Weight Transit Timing | Not applicable |
| 85. Typehead Height–Final Setting | As for Part 4 |
| 86. Carriage Return Button | Not applicable |
| 87. Dashpot–Dynamic Check | |
| 88. Line Length Operating Stop | |
| 89 Starter Switch Timing | As for Part 4 |
| 90. Bell and WRU Contacts | |
| 91 Operation Counter | |
| 92. Selector Bar/Punch–Vertical Clearance | Not applicable |
| 93. Selector Bar/Punch–Horizontal Clearance | |
| 94. Punch Withdrawal Plate | |
| 95. Feed Hole Pitch–Inital Setting | |
| 96. Feed Pawl Height | |
| 97. Feed Pawl Engagement | |
| 98. Reperforator Control Knob | |
| 99. Reperforator Control Lever Stop Screw | |
| 100. Reperforator Suppression from Bell and WRU | |
| 101. Throwout Lever Reset Chopper | |
| 102. Tape Feed Latch | |
| 103. Feed Hole Pitch-Final Setting | |

| | |
|---|---|
| 104. Tape Exhaust Alarm | As for Part 4 |
| 105. Keyboard Suppression | |
| 106. Trip from Keyboard | |
| 107. Vertical Trip Link | |
| 108. Trip from Function Bar | |
| 109. Transfer Lever Bracket | |
| 110. Trip Link Stop Screw | |
| 111. Feed Pawl | |
| 112. Feed Pawl Stop | |
| 113. Trip Mechanism | |
| 114. Line Length | Not applicable |
| 115. Operating Check and Setting–Up Procedure | As for Part 4 |

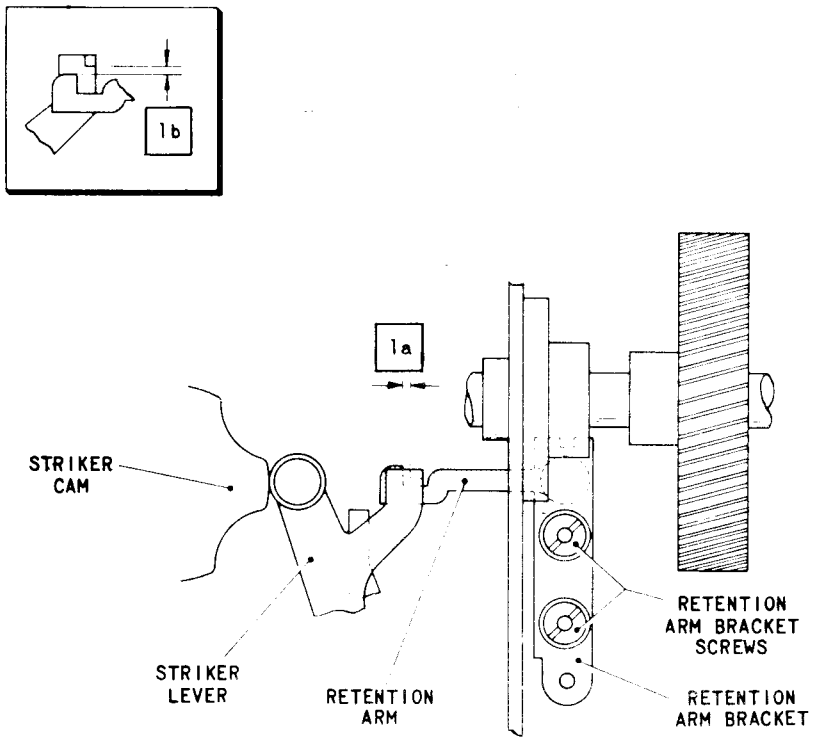


FIG.L.3 PECKER RETENTION ARM MECHANISM

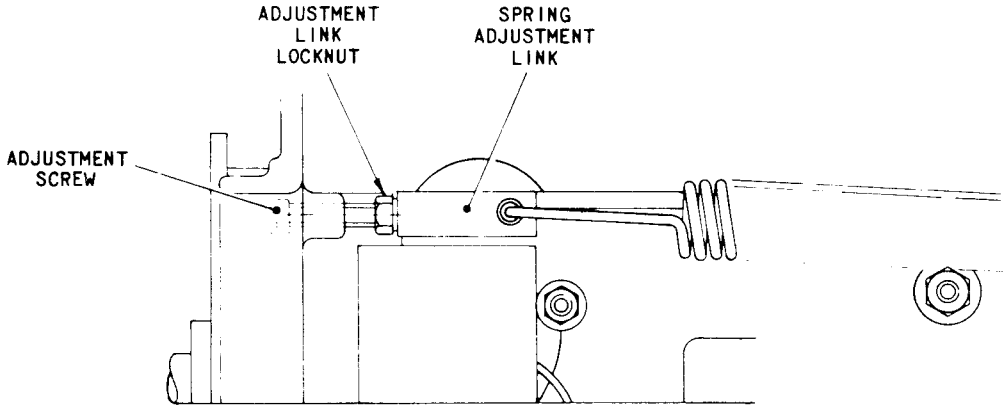


FIG.L.4 PRINT SPRING MECHANISM

# APPENDIX L

## 1. Pecker Retention Arm

### (a) Horizontal Position

Check

1.1 Move the electromagnet armature to the space position so that the selector clutch detent, Fig.4.28, is released. Turn the machine by hand until the striker lever, Fig.L.3, is on one of the high points of the striker cam. Check that there is now a horizontal clearance of ·005 - ·010 in. (dimension 'la') between the hook on the retention arm and the engagement face of the striker lever.

Action

1.2 If this is not so, slacken the two screws securing the retention arm bracket until it is friction tight. Using the screwdriver slot in the top of the bracket, lever the retention arm sideways until the correct clearance is present. Tighten the bracket screws.

### (b) Vertical Position

Check

1.3 Move the electromagnet armature to the mark position and continue to turn the machine by hand until the striker lever locates in one of the recesses in the striker cam. Check that this movement causes the lever to pass over the retention arm with an estimated vertical clearance of ·010 - ·020 in. (dimension 'lb' inset).

Action

1.4 To adjust, ensure that the electromagnet armature is still in the mark position, slacken the rockshaft stop arm screw, Fig.4.28, and the two screws securing the armature link pivot bracket N, Fig.7.14, and position the bracket until the correct clearance is achieved. Secure the bracket in this position with its two screws, reposition the rockshaft stop arm Fig.4.28, and tighten the stop arm screw.

## 2. Print Spring

Check

2.1 Stand the machine on its back and check that a force of approximately 3 lb (1.36 kg), applied to the print beam, Fig.4.47, at and in the direction of the arrow, just moves the beam.

Action

2.2 To adjust, slacken the locknut of the spring adjustment link, Fig. L.4, and turn the adjustment screw until the correct tension is present. Tighten the locknut.

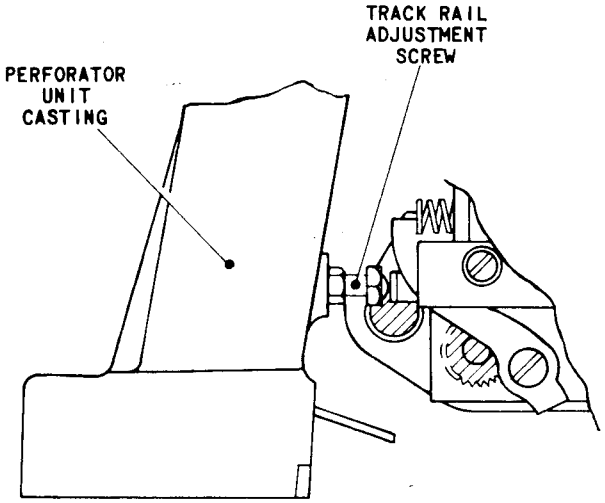


FIG.L.5 CORRECTOR TRACK RAIL ADJUSTMENT MECHANISM

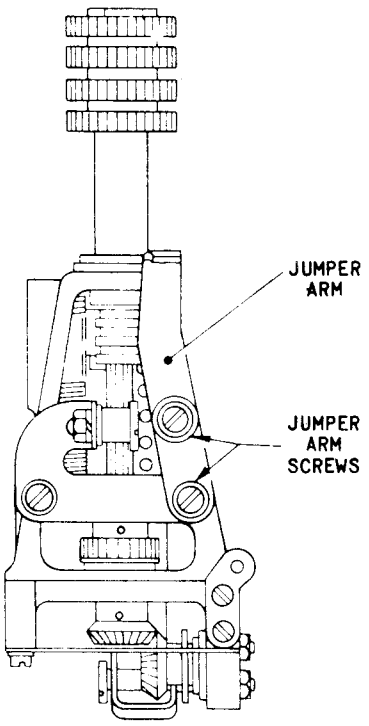


FIG.L.6 RIBBON JUMPER ARM

3. Typehead Corrector Track Rail

Check

3.1 Depress the letter 'X' Key or, if the machine has no Keyboard, set up the letter 'X' combination (MSMMM) on the pins. Lift the translator clutch abutment and turn the machine by hand until the typehead moves forward to print. Press the typehead casting forward so that the typehead moves towards the platen. Using slip gauge TA 1337, check that when the corrector lever, Fig.4.49, is fully engaged with the corrector wheel the typehead is within ·100 - ·125 in. of the platen.

Action

3.2 If this condition is not present, slacken the locknut securing the track rail adjustment screw, Fig.L.5 (located on the perforator unit) casting) and adjust this screw until the condition is satisfied. Tighten the locknut.

4. Ribbon Jumper Arm

Check

4.1 Depress any printing Key or, if the machine has no Keyboard, set up any printing combination on the pins. Lift the translator clutch abutment and turn the machine by hand until the printing action has taken place. Press the typehead casting so that the typehead is held against the platen and check that the upper edge of the ribbon is approximately ·030 in. above the type face which is in contact with the platen.

Action

4.2 If this is not so, slacken the two screws securing the jumper arm, Fig.L.6, and adjust the arm until the above condition is satisfied. Tighten the arm screws.

5. Punch Link Setting

Check

5.1 With the machine in the rest position, check that the two punch link rollers, Fig.L.7, are touching their respective cams.

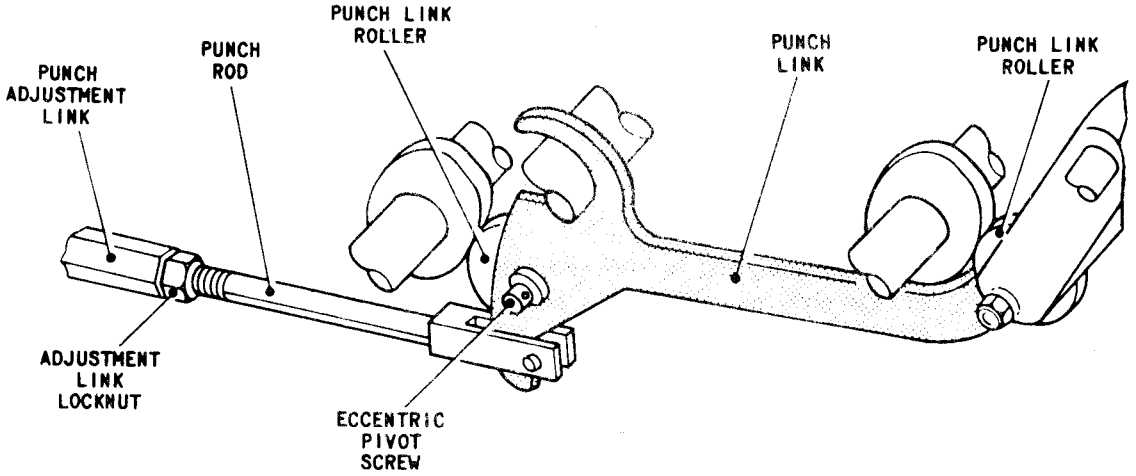


FIG.L.7 PUNCH LINK MECHANISM

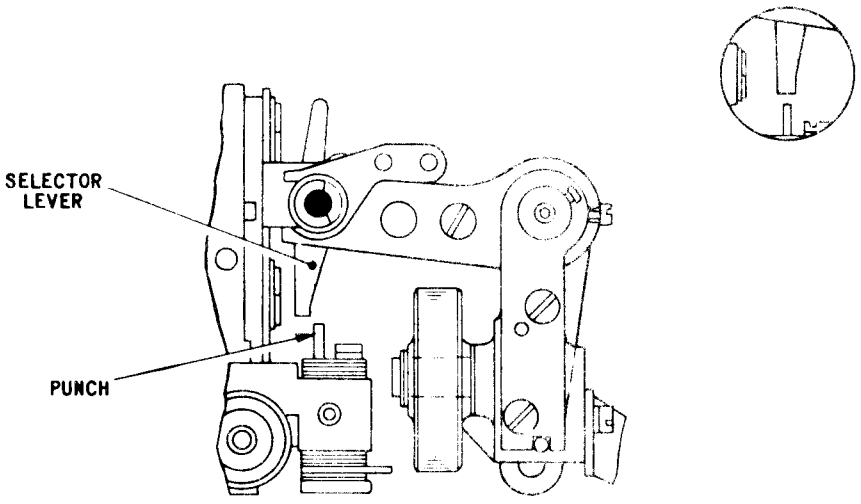


FIG.L.8 PUNCH SELECTOR MECHANISM

Action

5.2 If this is not so, stand the machine on its back, slacken the nut behind the left–hand roller (accessible through a hole in the base casting) and turn the eccentric pivot screw until the correct condition is obtained. Tighten the nut.

6. Punching–Initial Setting

Check

6.1 With the machine in the rest position, check that the endwise movement of the punches, Fig.L.8, is between ·003 - ·030 in. Check also that all the slack movement in the punch rod, Fig.L.7, is taken up by the punch retraction spring.

Action

6.2 To adjust, slacken the locknut securing the punch adjustment link and unscrew the link until it is slack and the punches, Fig.L.8, have little or no endwise movement. Slowly retighten the link, Fig.L.7, until the slack is just taken up and then tighten by a further half-turn. Secure the link in this position with its locknut.

7. Selector Levers

Check

7.1 With the machine in the rest position, check that the selector cable adjusting blocks, Fig. L.9, are located against the transfer lever spindle. Depress the letter 'T' Key or, if the machine has no Keyboard, set up the letter 'T' combination (SSSSM) on the pins. Lift the translator clutch abutment and turn the machine by hand through approximately half a revolution of the translator camshaft and check that the fifth element punch selector, Fig.L.8, just covers its punch, as shown in the inset.

7.2 Repeat Check 7.1 for the other four selector levers in turn, setting-up the appropriate code combination on the pins.

Action

7.3 To adjust, slacken the socket-headed grub screw in the appropriate cable adjusting block, Fig.L.9, and slide the corresponding cable sleeve in or out until the cable is correctly adjusted. Tighten the screw.

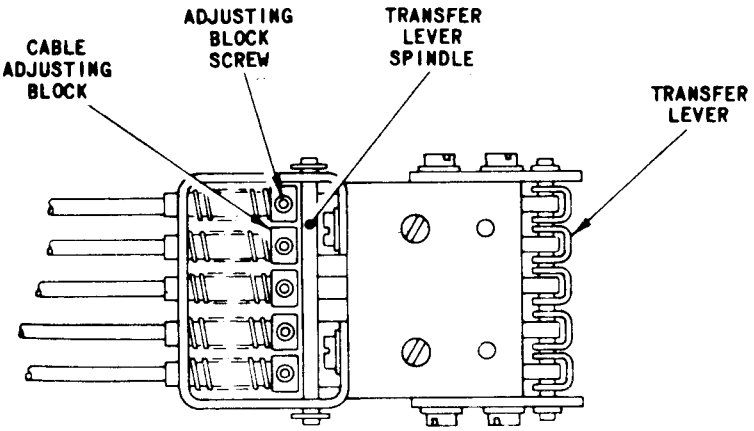


FIG.L.9 SELECTOR CABLES

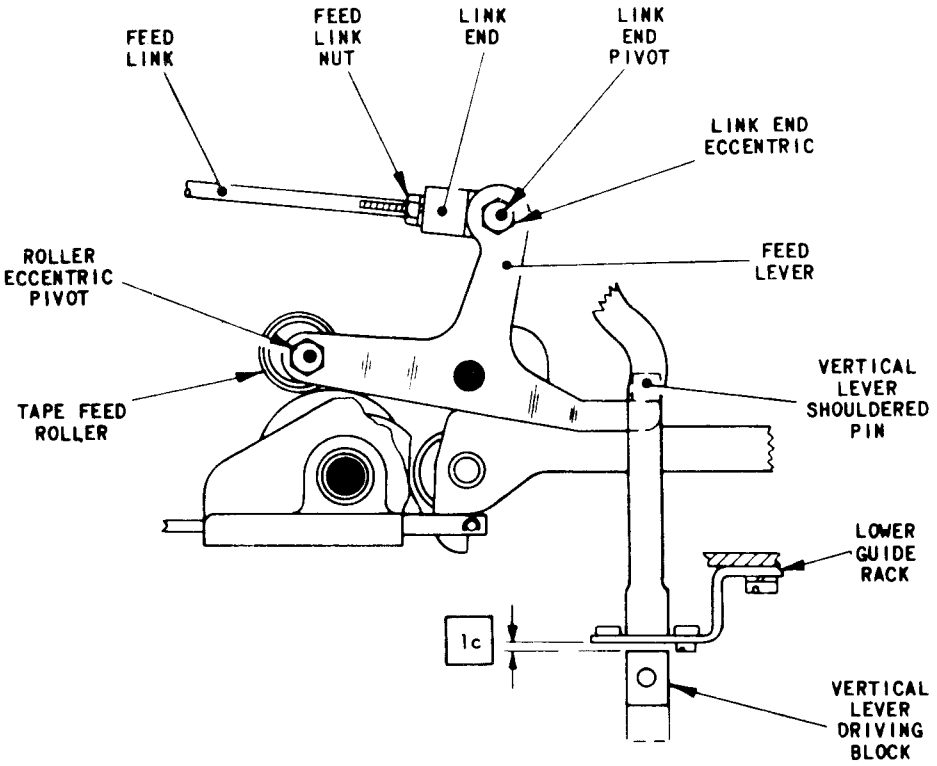


FIG.L.10 FEED LEVER MECHANISM

Check

7.4 With the machine in the rest position and the All Space code (SSSSS) set up on the pins, lift the translator clutch abutment and turn the machine by hand until the selector levers, Fig.L.8, have moved to the limit of their excursion towards the front of the machine. Check that the levers are now clear of their punches by approximately ·030 in. This ensures that the selector cables are moving freely.

Action

7.5 If necessary, free the cables and refine Adjustments 7.1 to 7.4 inclusive until all the conditions are satisfied. Secure the cables.

8. Tape Feed Lever

Check

8.1 With the machine in the rest position, hold the tape feed roller, Fig. L.10, down on to its cam. Press the vertical lever shouldered pin against the feed lever and check that there is now a clearance of up to ·005 in. (dimension 'lc') between the vertical lever driving block and the lower guide rack.

Action

8.2 To adjust, slacken the locknut securing the roller eccentric pivot and turn the pivot until dimension 'lc' is obtained. Secure the pivot in this position with its locknut.

9. Tape Feed

Check

9.1 With the machine in the rest position, hold the vertical lever driving block, Fig.L.11, against the lower guide rack. Check that there is an estimated clearance of ·020 - ·035 in. (dimension 'ld')between the feed lever and the feed lever latch.

Action

9.2 To adjust, slacken the screw securing the driving block and reposition the block until dimension 'ld' is satisfied. Tighten the screw.

Check

9.3 Check that the throwout lever, Fig.L.12, is clear of the feed pawl by approximately ·060 in.

Action

9.4 To adjust, slacken the locknut securing the throwout lever adjustment screw and turn the screw clockwise to obtain this condition. Tighten the locknut.

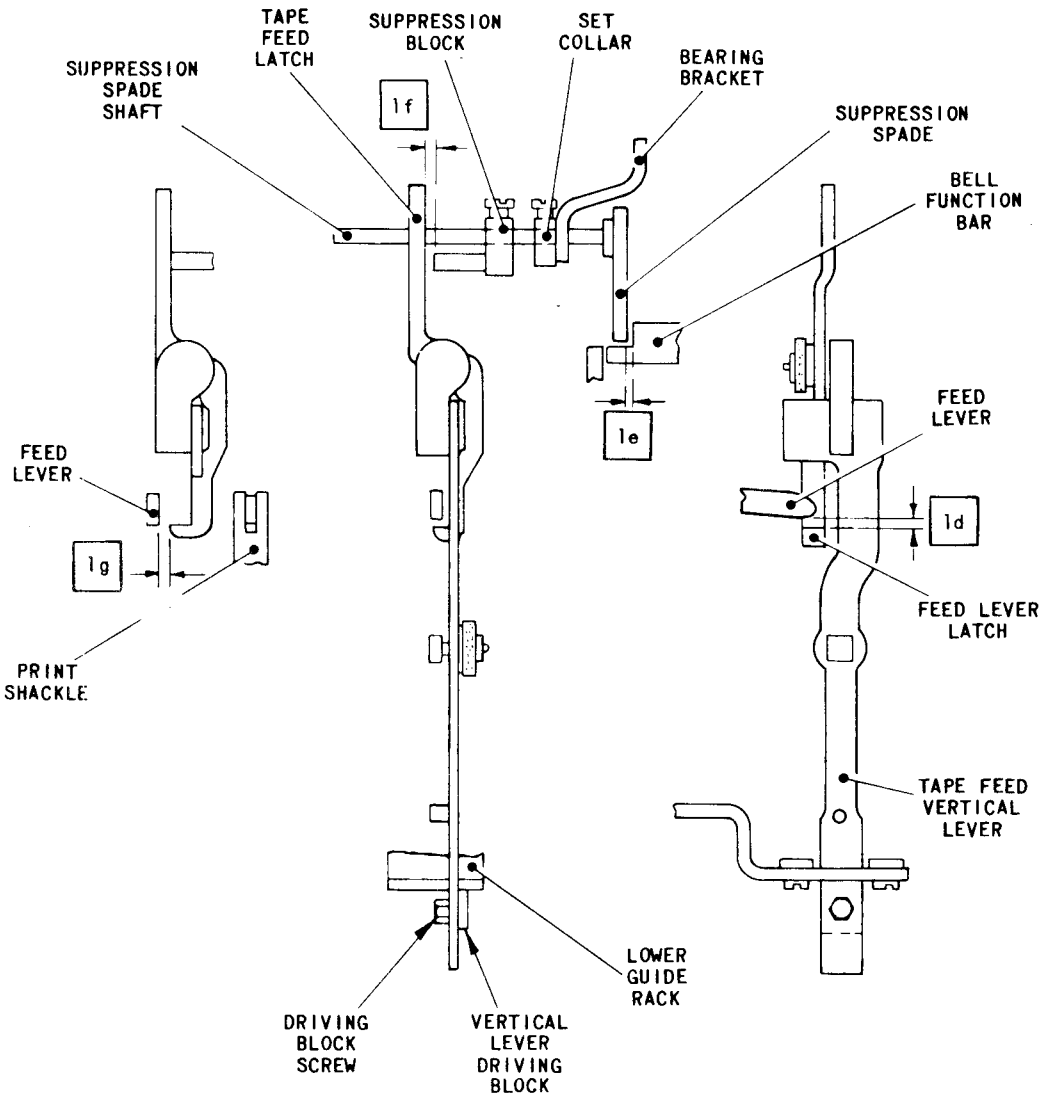


FIG.L.11 TAPE FEED LINKAGE AND FEED SUPPRESSION MECHANISM

Check

9.5 Check that the back space pawl is clear of its ratchet.

Action

9.6 If necessary, slacken the nut securing the stop pin and adjust the pin in its slot until the condition is satisfied. Tighten the nut.

Check

9.7 With the machine in the rest position, check that the capstan-headed screw securing the Feed link end is directly behind the feed spindle centre line, as shown in Fig.13. This ensures that the feed pawl, Fig.L.12, is operating in the correct tooth.

Action

9.8 If the pawl is operating in the wrong tooth, slacken the nut securing the link end eccentric, Fig.L.10, and turn the eccentric to its top mid-position. Tighten the nut. Remove the circlip securing the link end on its pivot and slide off the end together with the feed link. Slacken the nut securing the feed link to the link end and screw the end along the thread to obtain the required setting, taking care that there is at least 1/8 in. of thread left in the link end. Refit the link end on its pivot and secure it with its circlip. Tighten the feed link nut carefully, ensuring that the link end moves freely on its pivot.

Check

9.9 Feed a length of punched tape into the perforator. With the machine in the rest position, turn the feed wheel knob, Fig.L.13, counter-clockwise until resistance is felt. This movement should be approximately equal to 1/4 of a feed hole diameter and it can be checked by sighting at position 'X'.

Action

9.10 To adjust , slacken the nut securing the link end eccentric, Fig.L.10, and turn the eccentric (using the top half of its throw) to obtain the required setting. Tighten the nut.

Check

9.11 Set up any feeding combination on the pin-box. Lift the translator clutch abutment and turn the machine by hand until the feed lever has moved fully to the right. Turn the feed wheel knob, Fig.L.13, and check that the tape feed spindle has turned through one feed hole pitch only. Turn the knob in the opposite direction and check that there is some backward movement present. Return the machine to the rest position. Repeat the check using the run out shaft instead of the translator shaft.

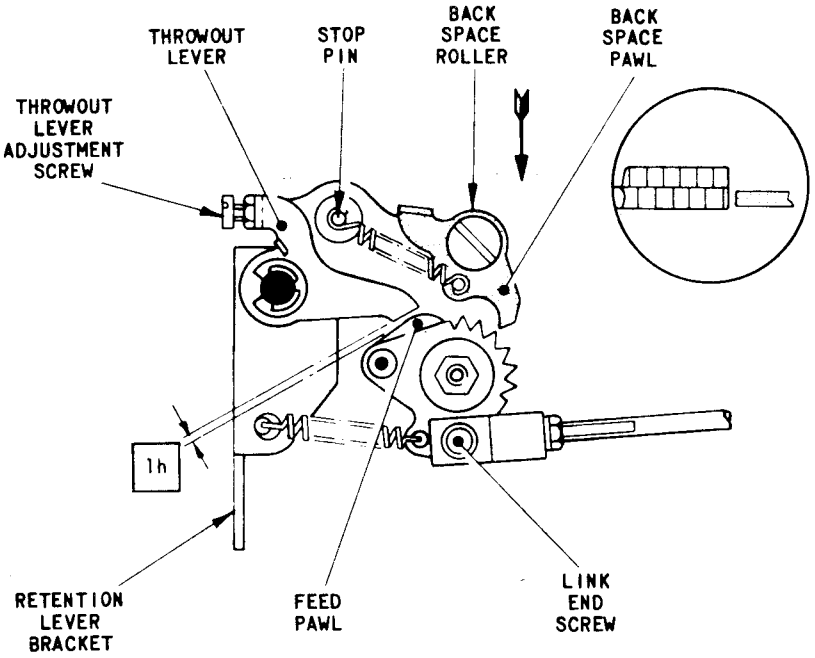


FIG.L.12 TAPE FEED MECHANISM

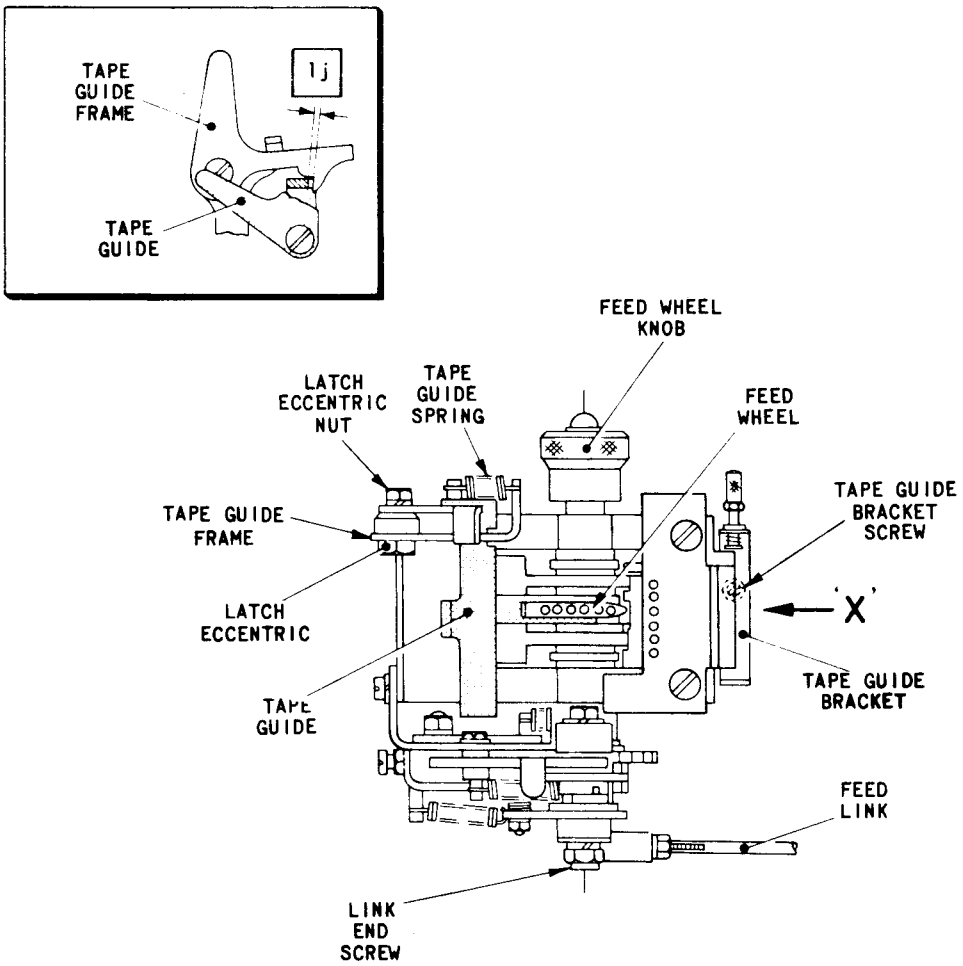


FIG.L.13 LATERAL TAPE GUIDE AND LATCH MECHANISM

Action

9.12 If either condition in Check 9.11 is not satisfied, refine Adjustment 9.10.

10. Tape Feed Suppression

Check

10.1 Turn the machine to the rest position. Move the shift lever, Fig. 4.53, to the Letters position, i.e. to the left looking from the rear of the machine. Set up a combination on the pins which will suppress the tape feed action in Figures shift only, i.e. Bell (MMSMS). Lift the translator clutch abutment and turn the machine by hand until the Bell function bar, Fig.L.11, has moved as far as possible towards the rear of the machine. With set collar against the bearing bracket, check that there is a clearance of ·005 – ·010 in. (dimension 'le') between the suppression spade and the Bell function bar.

Action

10.2 To adjust, slacken the screw securing the set collar and move the collar along the suppression spade shaft until the required clearance is obtained. Tighten the screw, taking care that its head is clear of the bracket.

Check

10.3 With the machine set up as in Check 10.1, check that there is a clearance of ·002 – ·010 in. (dimension 'lf) between the pin on the suppression block and the tape feed latch.

Action

10.4 To adjust, slacken the screw securing the suppression block and, holding the set collar against the bearing bracket, move the block along the suppression spade shaft until dimension 'lf' is obtained. Tighten the screw.

Check

10.5 With the machine set up as in Check 10.1, move the shift lever, Fig. 4.53, to the Figures position and check that the feed lever clears the tape feed latch by more than ·010 in. (dimension 'lg'). Check also that the feed lever does not foul the print shackle.

Action

10.6 If necessary, refine Adjustment 10.4.

## 11. Back Space

Check

11.1 Press lightly on the back space roller, Fig.L.12, to bring the back space pawl into contact with its ratchet. Check that the tip of the pawl lies in the middle of the ratchet tooth, as shown in the inset.

Action

11.2 To adjust, set the retention lever bracket until the required condition is obtained.

Check

11.3 Feed a length of punched tape into the perforator. Slacken the locknut securing the throwout lever adjustment screw and turn the screw counter-clockwise until the throwout lever moves the feed pawl out of engagement with the ratchet. Press the back space roller towards the rear of the machine until it is hard against its stop. Hold the roller in this position and turn the feed wheel knob, Fig.L.13, clockwise until resistance is felt. This movement should be approximately equal to half a feed hole diameter and it can be checked by sighting at position 'X'.

Action

11.4 If necessary, slacken the nut securing the stop pin, Fig.L.12, and adjust the pin in its slot until the condition is satisfied. Tighten the nut.

Check

11.5 With the back space lever in the rest position, check that the back space pawl is clear of its ratchet. This can be checked by turning the feed wheel knob, Fig.L.13, in a clockwise direction. If the knob can turn, the pawl is clear of its ratchet.

Action

11.6 If the feed wheel knob cannot be turned, refine Adjustment 11.4.

11.7 With the machine in the rest position, slacken the locknut securing the throwout lever adjustment screw, Fig.L.12, and turn the screw clockwise until there is a clearance of ·005 – ·015 in. (dimension 'lh') between the throwout lever and the feed pawl. Tighten the nut.

Check

11.8 Press the back space roller several times in the direction of the arrow. Check that each time the roller is pressed, the tape feed spindle is rotated counter-clockwise by one complete pitch and then located securely by the retention lever, roller, Fig.L.14.

Action

11.9 If necessary, refine Adjustment 11.4 and 11.7.

12. Lateral Tape Guide

Check

12.1 Perforate a length of tape with an All Mark (MMMMM) combination.

12.2 If the machine is to be used on communications work, check by eye that the code holes are disposed centrally across the tape.

12.3 If the machine is to be used on data processing systems, check by using tape gauge TA 1443 that the distance between the feed hole and the reference edge of the tape is ·389 – ·395 in.

Action

12.4 To adjust, slacken the screw securing the tape guide bracket, Fig. L.13, and move the bracket until the lateral position of the tape is satisfied. Tighten the screw.

13. Tape Feed Latch

Check

13.1 Check that the slot between the tines of the tape guide, Fig.L.13, is centrally disposed about the teeth of the feed wheel.

13.2 Insert a length of tape punched with feed holes into the perforator and check, by carrying out the following procedures, that the tips of the tines are just touching the tape.

(a) Lift the retention lever, Fig.L.14, out of engagement with the retention wheel

(b) Lift the tape guide, Fig.L.13, and turn the feed wheel knob, noting the force required to do so.

(c) Lower the guide on to the tape and turn the feed wheel knob again. Check that there is no discernible difference in the force required to turn the knob. Check also that there is no visible gap between the tips of the tines and the tape.

Action

13.3 If either of these checks is not satisfied, remove the tape guide spring, Fig. L.13, slacken the nut securing the latch eccentric and turn the eccentric until there is a clearance (dimension 'lj' – inset) between the hook on the latch and the tape guide frame.

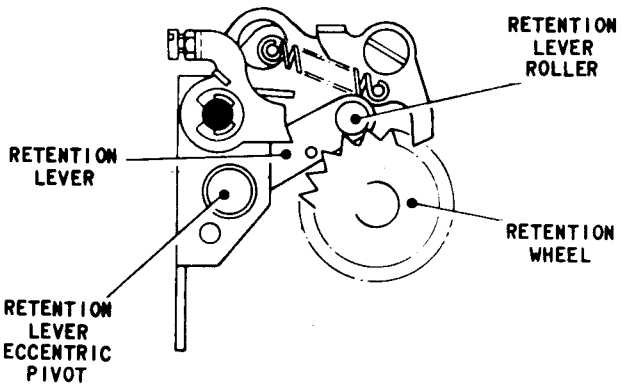


FIG.L.14 RETENTION LEVER MECHANISM

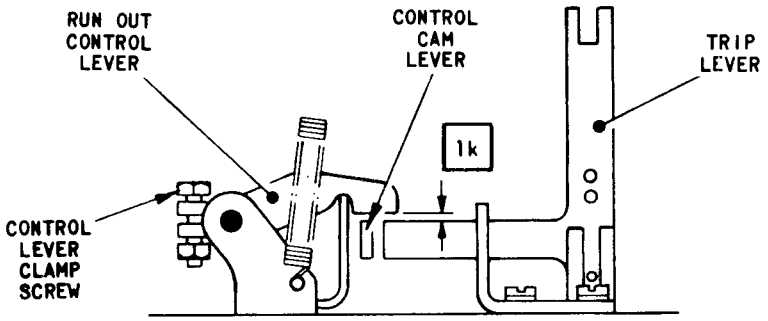


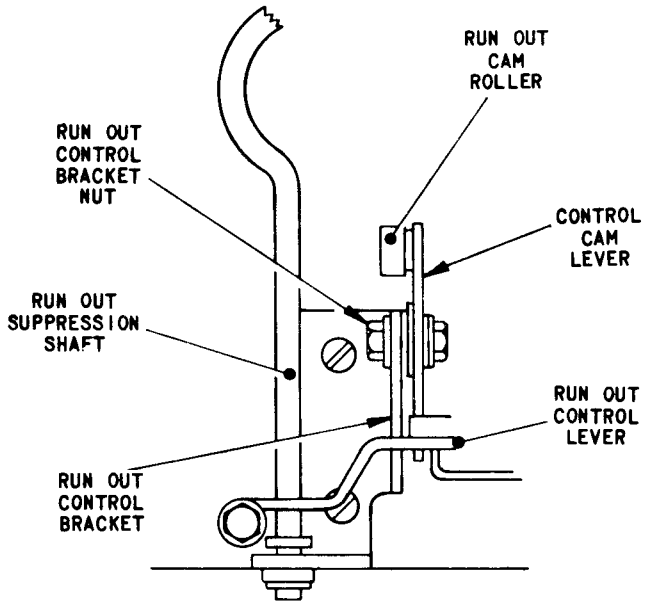


FIG.L.15 RUN OUT CONTROL MECHANISM

13.4 Slacken the screws securing the tape guide to the tape guide frame and, pressing the tape lightly on to the rollers by means of the tape guide, slide the guide backwards and forwards until its curved underside is positioned concentrically with the rollers, ensuring that the slot in the guide remains centrally disposed about the teeth of the feed wheel. Tighten the tape guide screws.

13.5 Refit the tape guide. Insert two thicknesses of tape punched with feed holes into the perforator. Adjust the latch eccentric until, with the tape guide resting on the tape, the hook on the latch is just touching the engagement face of the tape guide frame, i.e. dimension 'lj' is no longer present. Clamp the eccentric with its locknut.

13.6 Remove one thickness of tape. Slacken the tape guide screws again and move the guide towards the guide frame until the tips of the tines on the guide just touch the tape. Ensure that the slot in the guide is still centrally disposed about the teeth of the feed wheel and tighten the tape guide screws.

## 14. Feed Hole Pitch

Check

14.1 Insert a length of tape punched with feed holes into the perforator and check with a tape pitch gauge TA 1385 that the pitch of the feed holes is either constant, or increases and decreases regularly so that the total change of pitch is not more than half a feed hole pitch in ten inches of tape.

Action

14.2 If the feed pitch is irregular, refine Adjustments 13.3 to 13.6.

14.3 If the feed hole pitch varies regularly but the cumulative variation over ten inches is more than half a feed hole pitch, slacken the nut securing the retention lever eccentric pivot, Fig.L.14, and turn the eccentric until the feed hole pitch is regular. Tighten the nut.

14.4 Repeat Check 14.1 and, if necessary, refine Adjustments 9 and 14.3 until the condition is satisfied.

## 15. Run Out Control Lever

Check

15.1 With the machine in the rest position, check that the trip lever Fig.L.15, and the run out control cam lever are each with ·005 in. (dimension 'lk') of the underside of the run out control lever.

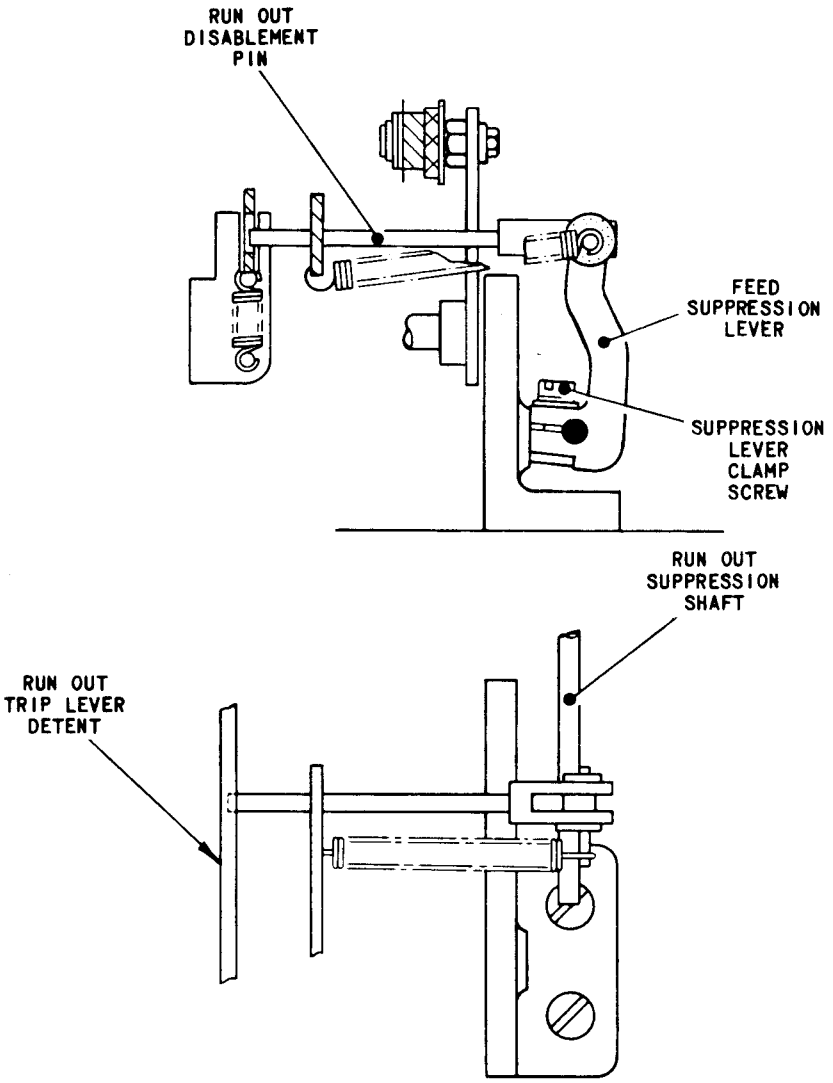


FIG.L.16 RUN OUT DISABLEMENT PIN POSITION

Action

15.2 To adjust, slacken the nut securing the run out control bracket and push the control cam lever and its screw down as far as they will go. Tighten the nut friction tight and, holding the run out cam roller down on to its cam,gently prise the control cam lever upwards until its tail is just touching the underside of the control lever. Fully tighten the bracket nut.

Check

15.3 Lift the selector clutch detent and turn the machine by hand so that the control lever is lifted by the trip lever. Check that the bend in the run out suppression shaft does not foul any other component during its movement.

Action

15.4 To adjust, slacken the control lever clamp screw and reposition the lever, on the shaft until the foul is cleared. Tighten the clamp screw.

16. Run Out Disablement Pin

Check

16.1 With the machine in the rest position and all three clutches disengaged, check that the feed suppression lever, Fig.L.16, is so positioned axially along the run out suppression shaft that the disablement pin is approximately at right angles to the trip lever detent.

Action

16.2 To adjust, slacken the screw clamping the feed suppression lever and move the lever along the shaft until the condition is satisfied.

Check

16.3 Check that the engagement between the disablement pin and the trip lever detent is approximately half the thickness of the detent.

Action

16.4 To adjust, hold the run out control lever, Fig.L.15, down on to the trip lever and the control cam lever, and position the feed suppression lever, Fig.L.16, on the suppression shaft to obtain the required condition. Tighten the suppression lever clamp screw.

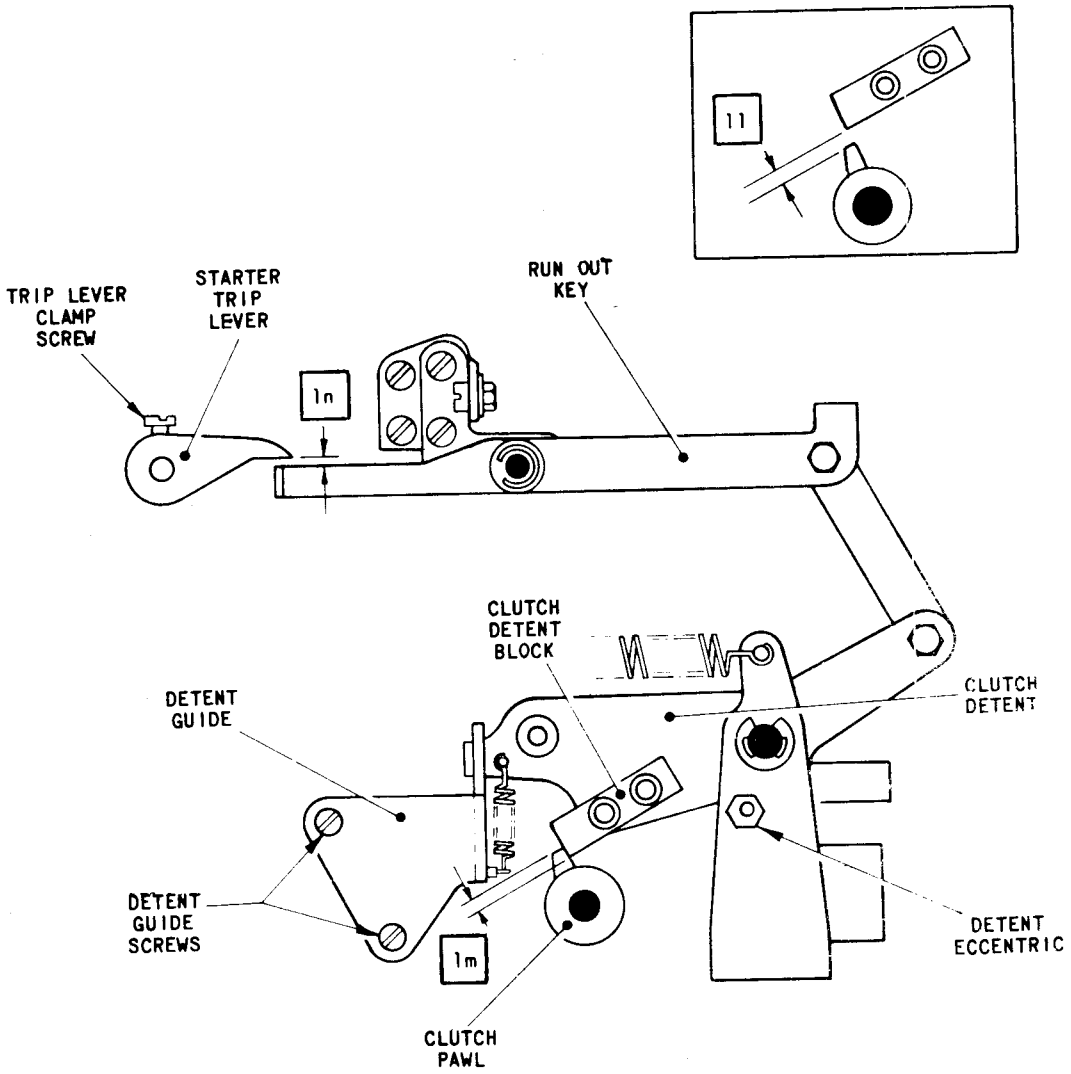


FIG.L.17 RUN OUT TRIP MECHANISM

## 17. Run Out Clutch Detent

Check

17.1 With the run out shaft in the rest position, trip the run out clutch by depressing the run out key, Fig.L.17. Check that there is a clearance of ·015 – ·030 in. (dimension 'll' – inset) between the clutch pawl and the block on the clutch detent.

Action

17.2 To adjust, slacken the nut securing the detent eccentric and turn the eccentric (accessible from the front of the machine) until dimension 'll' is obtained. Tighten the nut.

Check

17.3 Return the run out shaft to the rest position. Check that there is now an engagement of ·045 – ·060 in. (dimension 'lm') between the clutch pawl and the block on the clutch detent.

Action

17.4 Remove the selector unit as described in Part 5, page 4. Slacken the two screws securing the detent guide and, ensuring that the clutch detent is resting on the bottom of its slot in the guide, ease the rack up or down until dimension 'lm' is satisfied. Tighten the guide screws and reassemble the selector unit as described in Part 5, page 8.

## 18. Motor Start

Check

18.1 Check that there is a clearance of more than ·005 in. (dimension 'ln') between the starter trip lever, Fig.L.17, and the tail of the run out key.

18.2 Depress the run out key and check that there is now a clearance of ·005 – ·015 in. (dimension 'an') between the starter arm pin, Fig.4.32 and the worm wheel.

Action

18.3 To adjust, slacken the screw clamping the starter trip lever, Fig.L.17, and move the lever round its shaft until the clearances are obtained. Tighten the clamp screw.

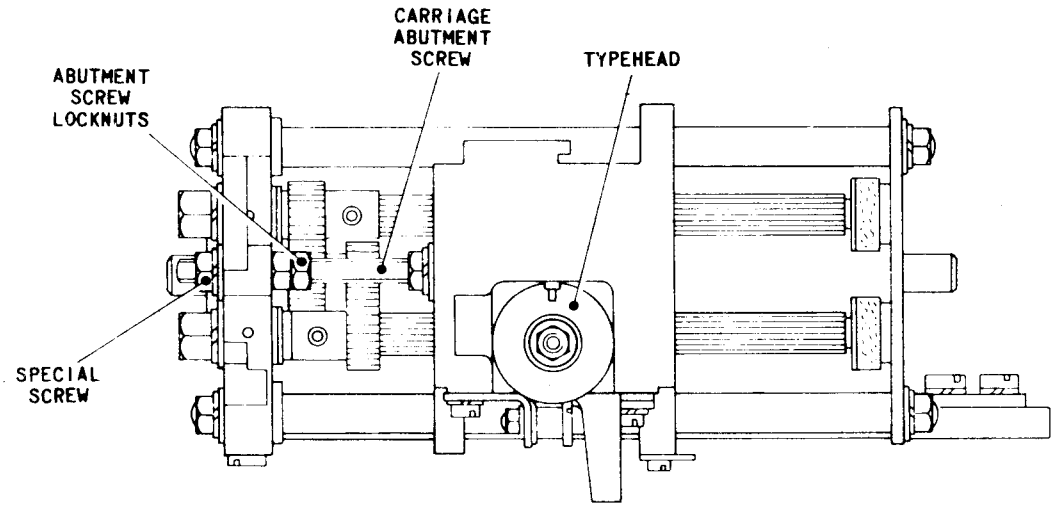


FIG.L.18 TYPEHEAD CARRIAGE MECHANISM

19. Punching – Final Setting

Check

19.1 Insert two thicknesses of tape into the perforator. Switch on the motor. Press the top end of the transfer levers, Fig.L.9, to the left to set up an All Mark condition in the punch block. Hold down the run out key, Fig.L.17 until about twelve inches of tape has been produced. Check that a regular series of clean, round holes has been perforated in each tape. Repeat this check using the translator shaft instead of the run out shaft.

Action

19.2 If the holes are not fully punched or the punches drag in their holes, refine Adjustment 6.2.

20. Printing Position

Check

20.1 Print and punch a sample of tape containing all the characters available and check that these characters are centrally disposed between the feed holes.

Action

20.2 If necessary, slacken the special screw securing the typehead carriage abutment screw, Fig.L.18, and adjust the locknuts along the abutment screw until the condition is satisfied. Tighten the locknuts and the special screw.

21. Run Out Keybar

Check

21.1 With the cover fitted and the lids closed, depress the run out button (located on the top of the cover) and check that it operates approximately ·030 in. before reaching its bottom stop.

Action

21.2 If necessary, slacken the nut securing the run out lever, Fig. L.19, to the run out keybar and adjust the lever until the condition is satisfied. Tighten the locknuts and the special screw.

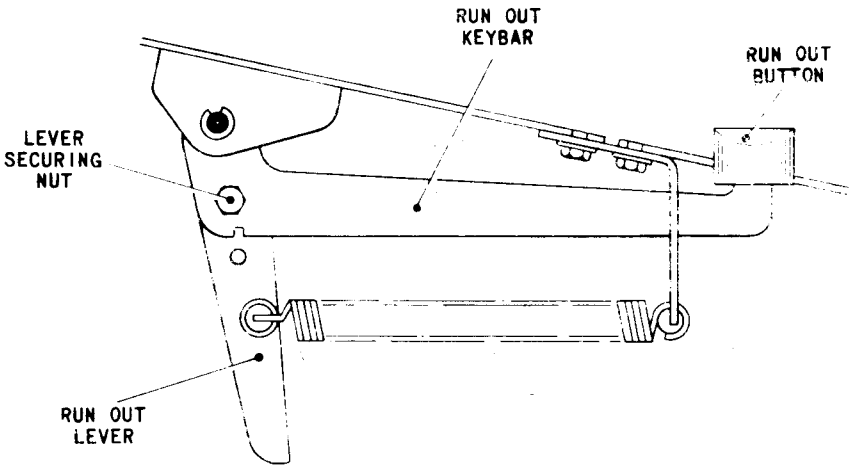


FIG.L.19 RUN OUT KEYBAR ASSEMBLY

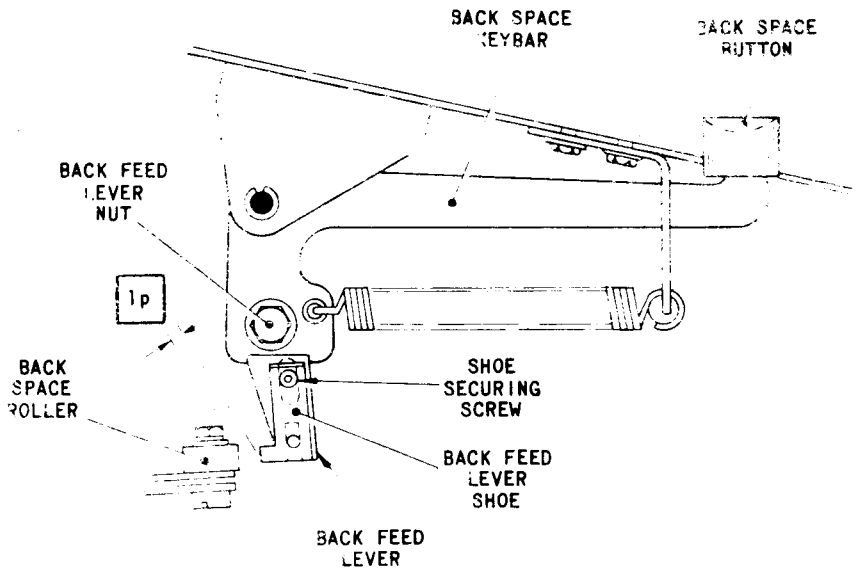


FIG.L.20 BACK FEED LEVER ASSEMBLY

22. Back Space Lever

Check

22.1 Open and close the front cover lid and check that there is a clearance of ·030 – ·060 in. (dimension 'lp') between the back feed lever shoe, Fig.L.20, and the back space roller. Depress the back space button and check that the shoe engages the centre of the roller.

Action

22.2 If necessary, adjust the back feed lever shoe as follows:-

(a) Vertical adjustment. Slacken the screw securing the shoe and move the shoe up or down in its slot. Tighten the screw.

(b) Horizontal adjustment. Slacken the nut securing the back feed lever and swing the lever backwards and forwards until the condition is satisfied. Tighten the nut.

Check

22.3 Close the lid again, depress the back space button several times and check that the back space mechanism operates correctly each time.

Action

22.4 If necessary, refine Adjustment 22.2.

23. Lag Weight Transit Timing

* The anchor of the lag weight spring is on the tail of the speed–change lever, Fig.4.68. On dual–speed machines the lag weight transit timing, and thus the length of the Stop signal, should be set to suit the required speed of operation by positioning the speed–change lever against one of its two stop screws. The positions of the stop screws are set in the factory and will not normally require attention. If, however, a new lag weight spring is fitted at any time it may be necessary to reposition the stop screws by carrying out the following procedure.

Check

23.1 Switch on the motor and check its speed as recommended in Adjustment No.81.

23.2 On dual–speed machines, refer to Part 2, page 10 and check that the correct set of gears is engaged.

23.3 Check that the speed-change lever is abutting against its appropriate stop screw for the required speed of operation, i.e.

(a) For 45/50 baud operation, as shown in Fig.4.68(a).

(b) For 75 baud operation, as shown in Fig.4.68(b).

23.4 Remove the tape from the perforator. Mark the feed wheel knob with a pencil line and make a corresponding mark on the punch block casting.

23.5 Switch on the motor, run out Space from the Keyboard and check that the number of revolutions made by the feed wheel knob over a period of one minute is as follows:–

(a) On 45 baud operation – 22 3/4 revolutions.

(b) On 50 baud operation – 25 revolutions.

(c) On 75 baud operation – 37 1/2 revolutions.

Action

23.6 If the correct number of revolutions is not obtained, move the speed-change lever, Fig.4.68, towards the front of the machine so that it is freed from its stop screws. On single-speed machines, it may also be necessary to slacken the locking screw located in the bottom slot in the translator unit rear frame, and move the screw to one side so that the speed-change lever can be freely adjusted.

Check

23.7 Move the speed-change lever slightly and repeat Check 23.5. Check whether it is now possible to approach the correct figure more closely without causing the translator clutch to cease tripping the machine.

23.8 If improvement appears to be possible, hold the speed-change lever in its new position and allow the machine to shut down under the action of the starter switch mechanism. Depress any key on the keyboard (except Run Out) and check that the translator clutch abutment lifts and the motor starts up.

23.9 On dual-speed machines, repeat the above procedure with the machine set to operate at its alternate speed.

Action

23.10 Refine the position of the speed-change lever until all the above conditions are satisfied, and then secure the lever in its new position with its stop screws. On single-speed machines, return the locking screw to its position at the right-hand side of the lever.

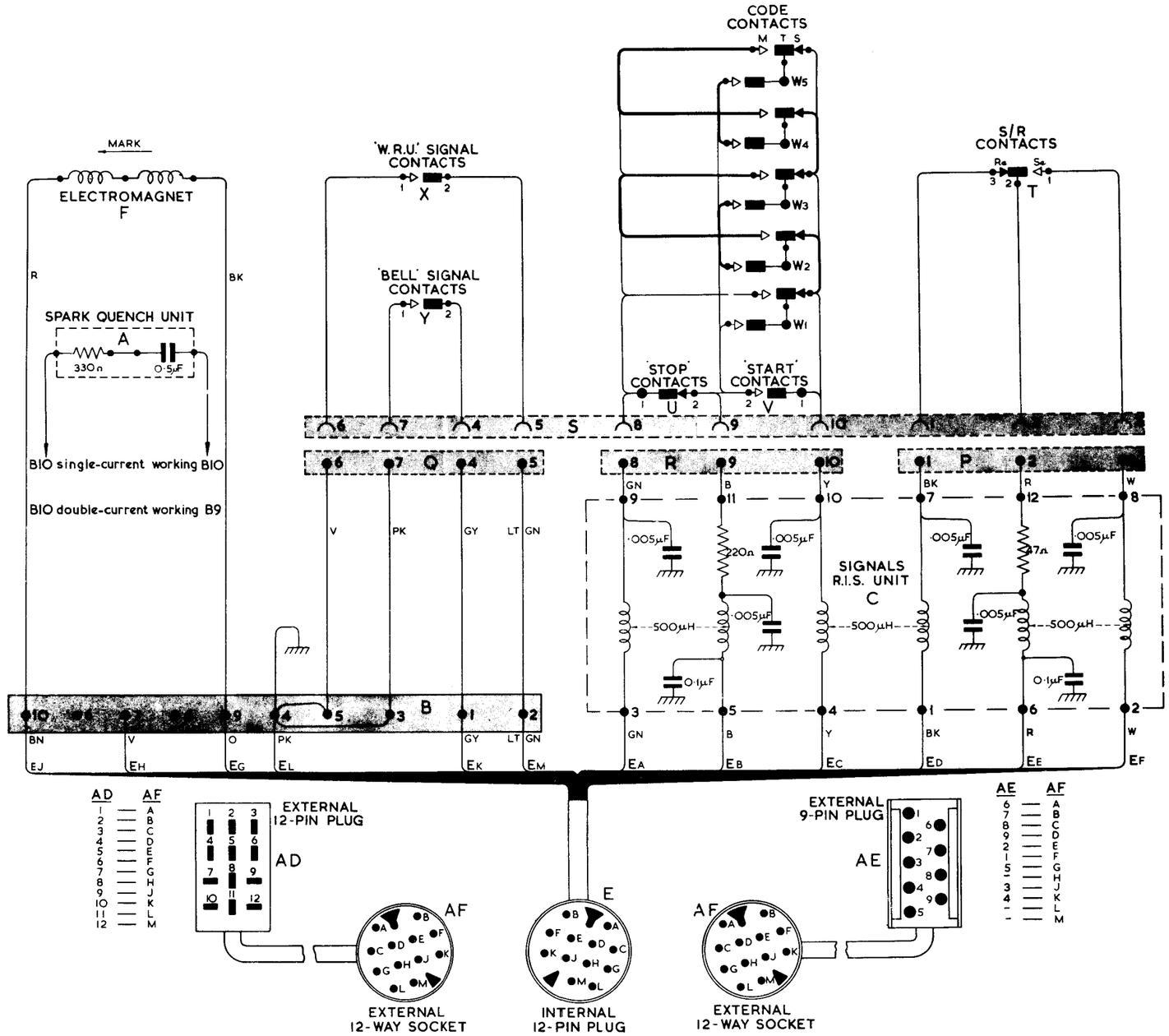


FIG.L.21 SIGNAL CIRCUIT

D Automatic Motor Switch

M Governor Resistor

AB Governor Contacts

AD End-of-Line Indicator

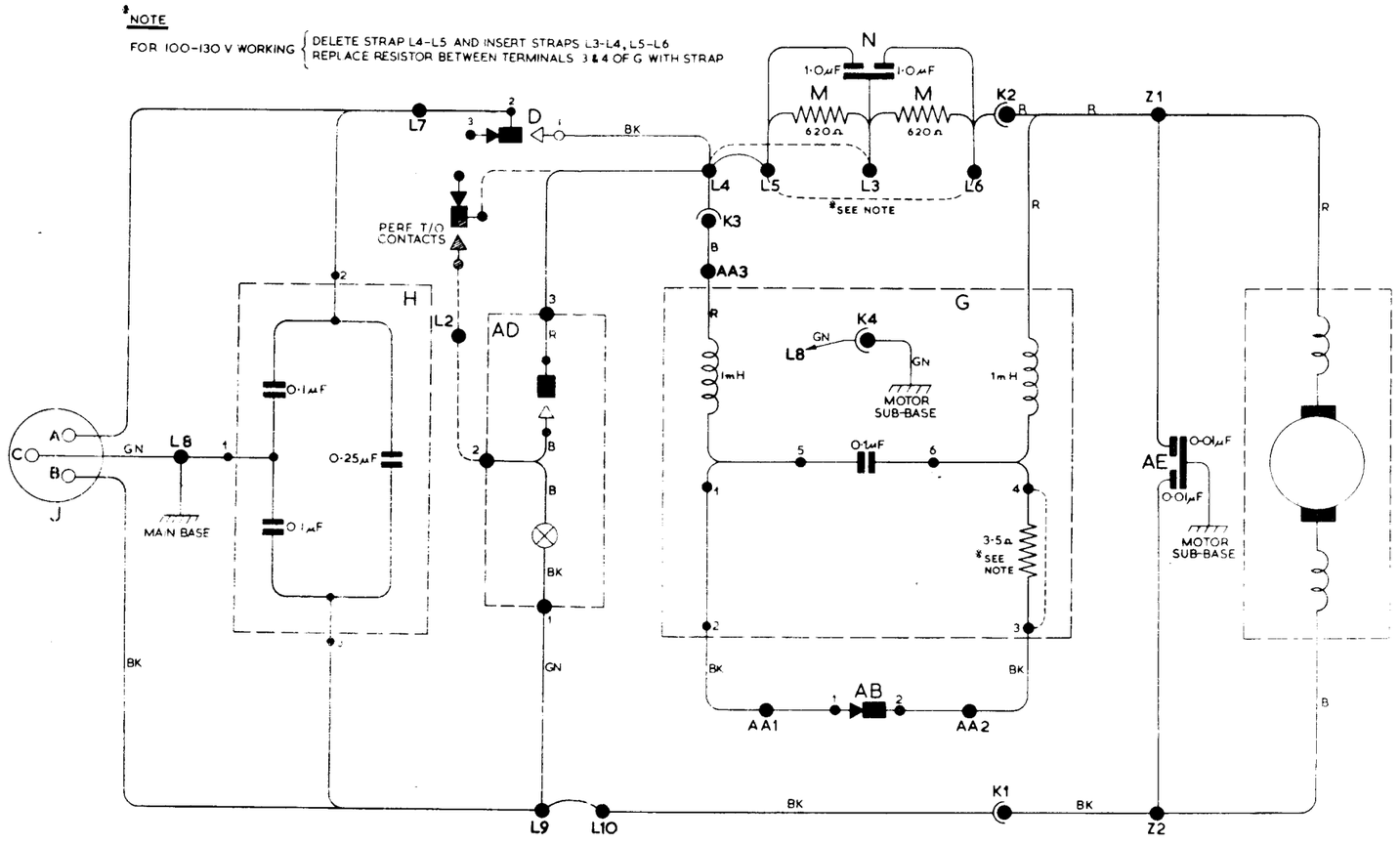


FIG.L.22 MOTOR CIRCUIT

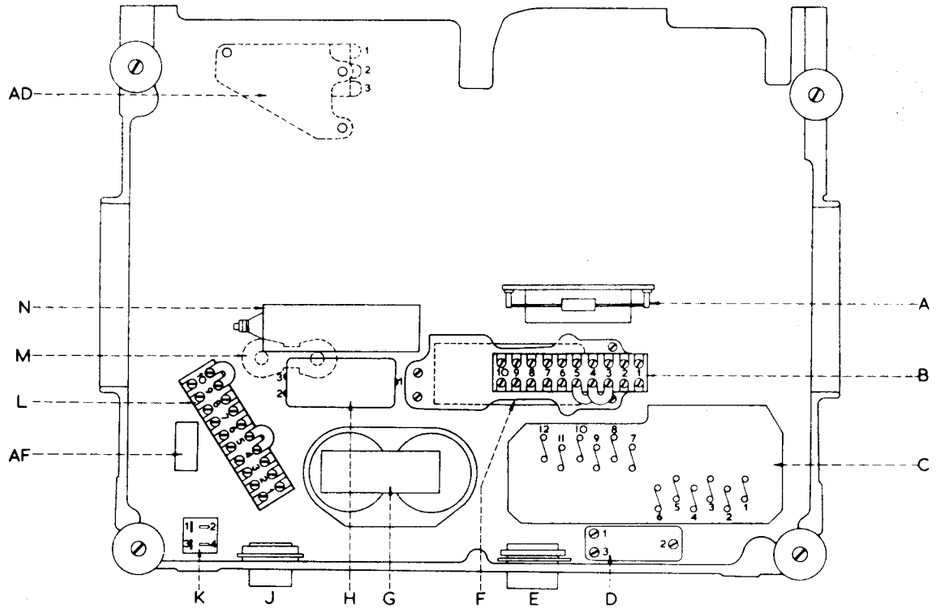


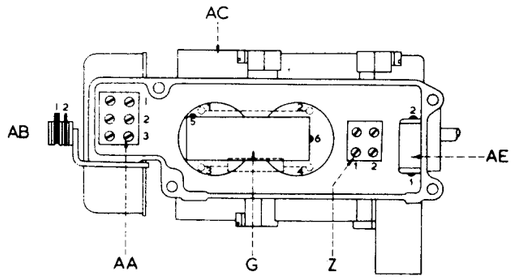


MOTOR UNIT

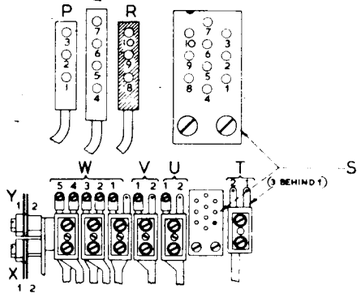


TRANSMITTER UNIT

| | | | | | |
|---|---|---|---|---|---|
| A | ELECTROMAGNET SPARK QUENCH UNIT. | L | TERMINAL STRIP 10-WAY | W | SEQUENTIAL CODE CONTACTS |
| B | TERMINAL STRIP 10-WAY | M | GOVERNING RESISTORS | X | 'WHO ARE YOU' SIGNAL CONTACTS |
| C | SIGNALS R.I.S. UNIT | N | CAPACITOR 1·0 μF. + 1·0 μF. | Y | 'BELL' SIGNAL CONTACTS |
| D | STARTER SWITCH | P | 3-PIN PLUG | Z | TERMINAL BLOCK 2-WAY |
| E | 12-WAY CHASSIS-MOUNTED PLUG | Q | 4-PIN PLUG | AA | CONNECTING BLOCK 3-WAY |
| F | ELECTROMAGNET. | R | 3-PIN PLUG | AB | GOVERNOR CONTACTS |
| G | MOTOR R.I.S. UNIT. | S | CONTACT BLOCK 10-WAY | AC | A.C. SERIES MOTOR |
| H | CAPACITOR 0·25 μF. + 0·1 μF. + 0·1 μF. | T | SEND/RECEIVE SWITCH | AD | END-OF-LINE INDICATOR |
| J | 3-WAY CHASSIS-MOUNTED PLUG | U | STOP CONTACTS | AE | CAPACITOR ·01 + ·01 μF. |
| K | MOTOR CONNECTION SOCKET | V | START CONTACTS | AF | REPERFORATOR 'TAPE OUT' SWITCH |

FIG.L.23 COMPONENT LOCATION

# PARTS LIST

The parts listed are those that are different or extra to parts used on the Model Seventy–Five Page Teleprinter.

To identify a part of the Model PR 75 first refer to the following parts list section. If the part is not listed it indicates that it is common to the Printing Reperforator and Page Printing versions of the Model Seventy-Five and is therefore listed in Part 7 of this manual.

# APPENDIX L

## CONTENTS


| | Page |
|---|---|
| Cover Unit S 4192 | L70 |
| Function Bar Unit S 4173 | L57 |
| Governed Motor Unit S 4135 | L60 |
| Machine Sub Assembly S 4365 | L48 |
| Main Base Unit S 4176 | L50 |
| Model Seventy-Five MK 4 Printing Reperforator Teleprinter | L47 |
| Reperforating Unit S 4165B | L65 |
| Ribbon Unit S 4167A | L59 |
| Selector Cables Unit S 4168 | L61 |
| Selector Unit S 4351, S 4352 | L58 |
| Tape Drawer Assembly 4165/62 | L68 |
| Translator Unit 3rd Stage CP S4353 | L53 |
| Translator Unit 2nd Stage CP 4353/1 | L55 |
| Translator Unit 1st Stage CP 4353/2 | L56 |
| Transmitter Unit S 4016A | L62 |
| True Character Counter CP S 4257 | L63 |
| Typehead Carriage Unit S 4166 | L59 |

APPENDIX L

## LIST OF ILLUSTRATIONS


| | |
|---|---|
| Cover Unit | Fig.L.52 |
| Function Bar Unit | Fig.L.36 |
| Governed Motor Unit (Top View) | Fig.L.40 |
| Governed Motor Unit (Underside View) | Fig.L.41 |
| Machine Sub Assembly | Fig.L.27 |
| Machine Sub Assembly | Fig.L.28 |
| Main Base Unit (Underside View) | Fig L.29 |
| Main Base Unit (Tape Feed and Run Out Components) | Fig.L.30 |
| Reperforating Unit | Fig.L.47 |
| Reperforating Unit | Fig.L.48 |
| Reperforating Unit | Fig.L.49 |
| Reperforating Unit (Tape Guide Assembly) | Fig.L.50 |
| Ribbon Unit | Fig.L.39 |
| Selector Cables Unit | Fig.L.42 |
| Selector Unit | Fig.L.37 |
| Tape Drawer Assembly | Fig.L.51 |
| Translator Unit (3rd and 2nd Stage) | Fig.L.31 |
| Translator Unit (3rd and 2nd Stage) | Fig.L.32 |
| Translator Unit (Tape Feed Suppression Parts) | Fig.L.33 |
| Translator Unit 1st Stage | Fig.L.34 |
| Translator Unit 1st Stage (All Mark Run Out Parts) | Fig.L.35 |
| Transmitter Unit | Fig.L.43 |
| True Character Counter CP (Front View) | Fig.L.44 |
| True Character Counter CP (Rear View) | Fig.L.45 |
| True Character Counter CP (Additional Parts fitted to Translator Unit) | Fig.L.46 |
| Typehead Carriage Unit | Fig.L.38 |

APPENDIX L

# MODEL SEVENTY–FIVE MK4 PRINTING REPERFORATOR TELEPRINTER

GROUP 1 for 3–row keyboard machines
GROUP 2 for 4–row keyboard machines
GROUP 3 for receiver only machines
GROUP 4 for receiver/transmitter machines


| Index Letter | Part No. | Part Name | See Page |
|---|---|---|---|
| | S4365 | MACHINE SUB ASSEMBLY | L48 |
| | S4016A | TRANSMITTER UNIT | L62 |
| | 4169/76 | Transmitter Cover CP | |
| | 4165/62 | TAPE DRAWER ASSEMBLY | L68 |
| | 4165/71 | Cover Plate CP (fitted under main base unit) | |
| | PS7135 | Pillar (2 per unit) fitted on tape drawer runner | |
| | S4192 | COVER UNIT CP (for machines without the True Character Counter facility) | L70 |
| | 4257/28 | COVER UNIT CP (for machines fitted with the True Character Counter facility) | L70 |

MACHINE SUB ASSEMBLY S4365 — GROUP 5 for keyboard machine (single speed); GROUP 6 for keyboard machine (with gear box); GROUP 7 for receiver machine (single speed); GROUP 8 for receiver machine (with gear box)

See Figs L 27 and L.28

| Index Letter | Part No | Part Name | |
|---|---|---|---|
| A | S4176 | MAIN BASE UNIT | See Page L50 |
| B | 4003/63A | AGGREGATE LEVERS ASSEMBLY | See EM75 Part 7 |
| C | S4166 | TYPEHEAD AND CARRIAGE UNIT | See Page L59 |
| D | S4167A | RIBBON UNIT | See Page L59 |
| E | S4353 | TRANSLATOR UNIT | See Page L53 |
| F | 4192/14 | Dummy Plinth | |
| | PW5719 | Special Washer (2 per assembly) between item A & F | not shown |
| G | S4351 | SELECTOR UNIT (single speed) | See Page L58 |
| or | S4352 | SELECTOR UNIT (gear box) | See Page L58 |
| H | S4135 | MOTOR UNIT (Governed) | See Page L60 |
| or * | S4360 | MOTOR UNIT (Synchronous) | See EM75 Part 7 |
| | PW5716 | Special Washer (for groups 6 and 8) not shown | |
| | PS6123 | Special Screw (for groups 5 and 7) | |
| J | S4012 | GOVERNOR UNIT | See EM75 Part 7 |
| | S4063 | PLUG AND CORD ARRANGEMENT (not shown) | See EM75 Part 7 |
| K | 4174/4 | Track Rail Bracket (RH) CP | |
| L | 4174/23 | Track Rail Bracket (LH) CP | |
| M | 4174/12 | Ribbon Unit Track Rail (2 per unit) | |
| N | 4174/24 | Cable Support Bracket | |
| O | PF1171 | Lubricating Pad | |
| P | S4165B | REPERFORATING UNIT | See Page L65 |
| Q | S4168 | SELECTOR CABLES UNIT | See Page L61 |
| R | 4174/27 | Track Rail and Rack Cover | |
| | 4174/1 | Roller Bracket CP includes:- | |
| S | 4174/25 | Roller Bracket | |
| T | PP5622 | Threaded Pin | |
| U | 3886/142 | Tape Roller | |
| V | 4014/115 | Tape Retainer | |
| W | PW5258 | Special Washer | |
| | 4174/2 | Roller Bracket CP includes:- | |
| X | 4174/26A | Roller Bracket | |
| Y | PS5723 | Special Screw | |
| Z | 3886/142 | Tape Roller | |
| AA | 4014/115 | Tape Retainer | |
| AB | 4174/3 | Cuttings Chute CP | |
| AC | 4014/95 | Cuttings Box CP | |

| Index Letter | Part No. | Part Name |
|---|---|---|
| AD | 4174/7 | Starter Trip Lever CP |
| AE | 4000/6 | Trip Shaft CP |
| AF | CS1030 | Set Collar and Screw |
| AG | 4174/6 | Starter Trip Lever CP |
| AH | BO4063/2 | Cable Cleat |
| | BO2633/1 | Ink Ribbon Black (not shown) |
| AJ | 4174/15 | Punch Rod CP |
| AK | PP6874 | Pivot Pins |
| AL | 4174/19 | Punch Adjustment Link |
| AM | 4174/5 | Punch Link End CP |
| AN | PG7580 | Tension Spring |
| AO | PG7579 | Tension Spring |
| GOVERNOR RESISTOR UNIT | | |
| | 4176/1 | Governing Resistor Unit CP includes:- |
| AP | 4176/31 | Resistor Base Bracket |
| AQ | 4176/19 | Resistor Bracket |
| AR | 4014/10 | Resistor Clip (2 per CP) |
| AS | PP5598 | Threaded Pins |
| AT | PW5746 | Special Washer (2 per CP) |
| | 4176/75 | Resistor CP includes:- |
| AU | BO3815/7 | Resistor 620 ohms ± 5% 15W |
| AV | BO1701 | Insulating Bead (67 per CP) |
| | 4176/32 | Resistor Cover (not shown) |

The following parts are required when a True Character Counter Unit is fitted.

See Page L63

| | | |
|---|---|---|
| AW | S4257 | TRUE CHARACTER COUNTER |
| AX | 4257/19 | Switch Cover CP |

* The Synchronous Motor fitted to the Model Seventy Five MK 4 Print and Reperforator is as shown in EM75 Part 7 Page 61 but the motor is orientated 90° and a Contact Cover 4360/1 is assembled to the top of the motor

## APPENDIX L

MAIN BASE UNIT S4176 { GROUP 1 for Keyboard machines 200–250V a.c.
GROUP 2 for receiver machines 200–250V a.c
GROUP 3 for Keyboard machines 100–130V a.c
GROUP 4 for receiver machines 100–130V a.c

See Fig L29 and L.30

| Index Letter | Part No. | Part Name |
|---|---|---|
| A | 4176/51 | Main Base CP (comprises machined and enamelled casting with pins driven in) |
| B | 4176/30 | Distance Pillar (4 per unit) |
| C | 4176/11 | Cuttings Box Bracket CP |
| D | 4176/56 | Starter Switch and Cableform CP includes:- |
| E | BO3807 | Starter Microswitch (1KW,A.C. Rating) |
| | 4176/2 | Electromagnet Spark Quench CP includes:- |
| F | 4176/9 | Tagboard CP |
| G | BO5201/11 | Capacitor 0.5 μF 400V |
| H | PK2063 | Clamp |
| J | 4014/134 | Bracket (2 per CP) |
| K | BO2636/1 | Resistor 330 ohms ± 10% 1/2 W |
| L | PE5125 | Collar Insulating (4 per CP) |
| M | 4176/60 | Motor Connexion Socket CP includes:- |
| N | BO7601/3 | 4-way Socket (Painton S4/MFS) |
| | 4176/58GRP1 | Capacitor CP (used on groups 1 and 2) } includes:- |
| | 4176/58GRP2 | Capacitor CP (used on groups 3 and 4) } |
| O | BO2649 | Capacitor (used on group 1) |
| or | BO4155 | Capacitor (used on group 2) |
| P | PE5127 | Insulating Strip (for machines with Governed Motors only) |
| | 4176/55 | Capacitor CP (for machines with Governed Motors only) includes:- |
| Q | BO1840A | Delta Capacitor 0.25 μF + 0.1 μF + 0.1 μF + 40% – 25% V |
| R | CB1152 | Terminal Strip (10-way) 2 per unit |
| S | PB4583 | Bush |
| | 4176/50A | Tape Exhaust Alarm Switch CP includes:- |
| T | 4176/68A | Switch Mounting Bracket |
| | 4176/54A | Switch CP includes:- |
| U | BO7220/2 | Microswitch |
| V | BO7229/3 | Microswitch Actuator |
| | 4014/27 | Transmitter Cableform CP (used on group 1 and 3) not shown } includes:- |
| or | 4014/74 | Cableform CP (used on groups 2 and 4) not shown } |
| | 4014/25 | 3-way plug CP } used on groups 1 and 3 |
| | 4014/69 | 3-way plug CP } |
| | 4014/26 | 4-way plug (used on all groups) |
| | 4014/387 | 12-way Plug CP (used on groups 1 and 3) } includes:- |
| or | 4014/388 | 12-way Plug CP (used on groups 2 and 4) } |

| Index Letter | Part No | Part Name |
|---|---|---|
| W | BO3811/4 | 12 way Panel Mounting Plug |
| X | 4176/34 | Fixing Plate (12-way plug) |
| | 4014/389A | 3-way Plug CP includes:- |
| Y | BO3816/4 | 3-way Plug |
| Z | 4176/33 | Fixing Plate (3- way plug) |
| AA | BO4063/2 | Cable Clip (2 per unit) |
| | BO4063/5 | Cable Clip (not shown) |
| AB | 4176/44 | Cover Plate |
| AC | 4176/18 | Print Spring Adjustment Link |
| AD | 4176/16 | Run Out Shaft CP |
| AE | 4176/12A | Bracket Sub CP |
| AF | 4176/14 | Run Out Shaft Gear CP |
| AG | PW5741 | Shim (9 per unit max) |
| AH | 4176/52 | Run Out Bearing Bracket CP |
| AJ | 4176/23A | Gear Spindle |
| | 4176/3 | Cam Sleeve CP includes:- |
| AK | 4176/46 | Cam Sleeve |
| AL | 4176/26 | Cam Spacer (2 per CP) |
| AM | 4176/49 | Compensator Cam (No 1) |
| AN | 4176/28 | Cam Spacer |
| AO | 4176/47 | Punch Cam (No 2) |
| AP | 4176/27 | Cam Spacer |
| AQ | 4176/48 | Tape Feed Cam (No.3) |
| | PN5048 | Special Nut not shown |
| | KY1054 | Key |
| AR | 4176/8 | Clutch Spring CP |
| AS | 860/115F | Pawl |
| AT | 1650/306 | Guide Plate (2 per CP) |
| AU | PP1066-1 | Parallel Pin |
| AV | GR5010 | Spiral Gear |
| AW | 4176/13A | Driven Gear |
| | BO3853A | Ball Thrust Bearing (not shown) type GT 3/16 |
| AX | 4176/24 | Bearing Bracket |
| | 4176/4 | Tape Feed Lever CP includes:- |
| AY | 4176/7 | Tape Feed Lever Sub CP |
| AZ | EC5082 | Eccentric Adjuster (Feed Link) |
| BA | EC5084 | Eccentric Roller Pivot |
| BB | RL1184 | Roller |
| BC | PF1126 | Lubrication Washer |
| BD | PW5811 | Special Washer |
| BE | 4176/25 | Punch Link Guide |
| BF | 4176/5 | Compensator Cam Lever CP |
| | 4176/10 | Run Out Trip Levers CP includes:- |
| BG | 4176/39 | Detent Bearing Bracket |

| Index Letter | Part No. | Part Name |
|---|---|---|
| BH | 4176/43 | Spring Anchor Bracket |
| BJ | EC5083 | Eccentric Screw |
| BK | PP6309 | Detent Pivot |
| BL | 4176/40 | Detent |
| BM | 4176/15 | Run Out Lever CP |
| BN | 4176/17 | Block |
| BO | PG7582 | Tension Spring |
| BP | PG7476 | Tension Spring |
| BQ | PG7581 | Tension Spring |
| BR | 4174/11 | Feed Link |
| BS | 4174/10 | Feed Link End (2 per assembly) |
| BT | PW5812 | Shim |
| BU | PS7136 | Shouldered Screw (2 per assembly) |
| BV | 4174/16 | Connecting Link (Run Out Key) |
| BW | PF1114 | Felt Lubricating Washer |

The following parts are only fitted to machines with a Synchronous Motor.

| | | | |
|---|---|---|---|
| BX | 4014/200 | Electrolytic Capacitor CP includes:- | |
| | BO4122/1 | Capacitor 64 $\mu$ F 150V (for 100/125 Volt motors) | |
| | BO4122/3 | Capacitor 15 $\mu$ F 350V (for 200/250 Volt motors) | |
| | 4014/198 | Motor Capacitor CP (not shown) includes:- | |
| | BO4092A/6 | Capacitor 2·0 $\mu$ F 440V (230/250 Volt) | as required |
| or | BO4092A/7 | Capacitor 2·5 $\mu$ F 440V (200/220 Volt) | by motor |
| or | BO4092A/5 | Capacitor 7·5 $\mu$ F 250V (115/125 Volt) | voltage |

TRANSLATOR UNIT 3rd STAGE S4353 { GROUP 1 for send/receive machine with keyboard
GROUP 2 for receiver only machines

See Figs. L.31, L.32, L.33

| Index Letter | Part No. | Part Name | |
|---|---|---|---|
| | S4173 | FUNCTION BAR UNIT | See Page L57 |
| | 4353/1 | TRANSLATOR UNIT 2nd STAGE | See Page L55 |
| | 4353/2 | TRANSLATOR UNIT 1st STAGE | See Page L56 |
| **REAR FRAME** | | | |
| | 4169/32AGRP1 | Rear Frame CP (for send/receive machines with Keyboard) } includes:- | |
| | 4169/32AGRP2 | Rear Frame CP (for receiver only machines) } | |
| A | 4169/80 | Rear Frame Sub CP | |
| **FUNCTION BAR RESET MECHANISM** | | | |
| B | 4169/51A | Sub Plate CP | |
| C | 4169/47 | Steady Bracket CP | |
| D | 4169/64 | Sub Plate Rack | |
| E | 4010/342 | Support Block | |
| **VERTICAL LEVER RACK** | | | |
| | 4169/73 | Vertical Lever Rack CP includes:- | |
| F | 4169/52 | Vertical Lever Rack Sub CP | |
| **TRIP OFF MECHANISM** | | | |
| G | 4169/38 | Trip Lever CP | |
| | 4169/37 | Trip off CP includes:- | |
| H | 4169/46 | Trip Lever Bracket CP | |
| J | 4169/39 | Trip Bellcrank CP | |
| **TAPE FEED MECHANISM** | | | |
| K | 4169/36 | Tape Feed Lever CP | |
| L | PG7584 | Tape Feed Lever Spring | |
| | 4169/34 | Tape Feed Vertical Lever CP includes:- | |
| M | 4169/35 | Tape Feed Vertical Lever Sub CP | |
| N | 4169/45 | Tape Feed Latch | |
| O | PG7585 | Special Spring | |
| P | PF1142 | Lubricating Washer (2 per CP) | |
| Q | PW5710 | Special Washer (2 per CP) | |
| R | PP7947 | Shouldered Pin | |
| S | 4169/70 | Lower Tape Feed Rack | |

| Index Letter | Part No. | Part Name |
|---|---|---|
| PUNCH LINK | | |
| | 4169/33 | Punch Link CP includes:- |
| T | 4169/69 | Punch Link |
| U | 4169/58 | Punch Link Lever |
| V | PS5725 | Shouldered Screw |
| W | PW5748 | Special Washer (3 per CP) |
| X | 4010/457 | Roller Race (2 per CP) |
| Y | 4169/59 | Spacer |
| Z | PW5813 | Special Washer |
| AA | EC5085 | Eccentric Screw |
| AB | 4169/42 | Run Out Key CP |
| AC | 4169/43 | Rear Bearing Bracket CP |
| CONTACT MOUNTING PLATE | | |
| | 4353/3 | Contact Mounting Plate CP (for receiver only machines) } includes:- |
| AD | 4220/3 | Contact Mounting Plate } |

The following parts are only fitted to machines with the Tape Feed Suppression facility.

| | | |
|---|---|---|
| AE | 4169/44 | Suppression Spade CP |
| AF | 4169/40 | Bearing Bracket CP |
| AG | CS1026 | Set Collar and Screw |
| AH | 4169/41 | Suppression Block CP |

TRANSLATOR UNIT 2nd STAGE CP4353/1 { GROUP 1 for send/receive machines with Keyboard
GROUP 2 for receiver only machines

See Figs. L.31, L.32

| Index Letter | Part No. | Part Name | |
|---|---|---|---|
| **FRONT MAIN FRAME** | | | |
| AJ | 4169/3 | Front Main Frame CP includes:- | |
| AK | 4169/6 | Corner Bracket CP | |
| **MIDDLE MAIN FRAME** | | | |
| | 4169/4GRP1 | Middle Main Frame CP (used on send/receive machines) | includes:- |
| | 4169/4GRP2 | Middle Main Frame CP (used on receiver only machines) | |
| AL | 4169/7 | Middle Main Frame Sub CP | |
| | 4169/5GRP1 | Selector Transmitter Lever Assembly CP (used on send/receive machines) | includes:- |
| | 4169/5GRP2 | Selector Transmitter Lever Assembly CP (used on receiver only machines) | |
| AM | 4169/11 | Selector Lever Pivot | |
| AN | 4169/10 | Pivot Support Bracket | |

## APPENDIX L

## TRANSLATOR UNIT 1st STAGE CP 4353/2

See Figs L.34, L.35

| Index Letter | Part No. | Part Name |
|---|---|---|
| **BASE PLATE** | | |
| A | 4169/12GRP1 | Translator Unit Base Plate CP |
| **SUPPRESSION SHAFT AND CONTROL LEVER** | | |
| B | 4169/13 | Bearing Bracket CP |
| C | PF1116 | Lubrication Washer (2 per CP) |
| D | 4169/21 | Suppression Shaft |
| E | 4169/15 | Run Out Control Bracket CP |
| F | 4169/29 | Control Lever |
| G | 4169/16 | Run Out Control Cam Lever CP |
| H | PB4778 | Collar |
| **MAIN CAMSHAFT AND CAM ASSEMBLY** | | |
| J | PB4774 | Bush |
| K | 4169/27 | Tape Feed Cam "D" (main shaft) |
| L | 4169/19 | Cam Spacer (2 per unit) |
| M | 4169/24 | Run Out Control Cam "C" |
| N | 4169/28 | Punch Cam "B" (main shaft) |
| O | 4010/35A | Cam Spacer |
| P | KY1052 | Key |
| Q | PB4777 | Spacer |
| R | 4169/31A | Count Lever Cam |
| S | 4169/30 | Spacing Collar |
| T | KY1053 | Key |
| U | PG7003 | Tension Spring |
| V | 4169/18 | Detent Guide CP |
| W | 4174/29 | Lever Feed Suppression |
| X | 4005/9 | Trip Arm Nut |
| Y | PP6873 | Pivot Pin |
| Z | PF1151 | Felt Lubricating Washer |
| AA | 4174/8 | Disablement Pin CP |
| **Additional Parts required for 'ALL MARK' Runout Facility.** | | |
| AB | 4176/74 | Runout 'All Mark' Shaft CP |
| AC | 4176/57 | Lever 'All Mark' |
| AD | 4005/9 | Special Nut |
| AE | 4176/73 | Blade "All Mark' |
| AF | 4176/70 | Bearing Bracket CP (front) |

# FUNCTION BAR UNIT S4173

See Fig. L. 36

| Index Letter | Part No | Part Name |
|---|---|---|

| POSITION | INDEX LETTER | PART NO. | FUNCTION BARS (C.C.I.T.T. STANDARD) FUNCTION | TENSION SPRING |
|---|---|---|---|---|
| 1 | A | 4173/117 | SHIFT CHANGE 'LETTERS' | PG7468C |
| 2 | B | 4173/113 | SHIFT CHANGE 'FIGURES' | PG7468C |
| 3 | | 4173/107 | ALL SPACE DUMMY | PG7466C |
| 4 | | 4173/98 | SPACE | PG7552A |
| 5 | C | 4173/81 | ANSWER BACK TRIP AND W.R.U. CONTACTS | PG7557 |
| 6 | | 4173/71 | CARRIAGE RETURN | PG7466C |
| 7 | | 4173/59 | LINE FEED | PG7466C |
| 8 | D | 4173/42 | BELL 'J' CONTACTS | PG7466C |
| 9 | | OMIT | | |

NOTE:— Assembly of the Function Bar Unit varies according to the required operation of the machine. The Function Bars and Springs listed above are those for a machine operating on the International 5– Unit Teleprinter Code. Customers requiring spare Function Bars and Springs for machines operating on codes other than this should quote the bar position number and the serial number of the machine. Function Bars in positions 8 and 9 operate common contacts.

| | | |
|---|---|---|
| E | 4173/7 | Function Bar Rack (Rear) |
| F | 4173/4 | Function Bar Rack (Front) |
| G | 4173/1 | Spring Anchor Bracket CP |
| H | 4173/5 | Screwed Stay Rod |
| J | 4173/3 | Adjustment Block Bracket CP |
| K | 4173/2 | Answer Back Trip Shaft Bracket CP |

SELECTOR UNIT S4351 (Single Speed Model) { GROUP 1 for transmitter/receiver machines; GROUP 2 for receiver only machines

SELECTOR UNIT S4352 (Gear Box Model) { GROUP 1 for transmitter/receiver machines; GROUP 2 for receiver only machines

See Figs. L.37

| Index Letter | Part No. | Part Name |
|---|---|---|
| | 4351/1GRP1 | Selector Unit Sub-Assembly (for single speed models) } includes:- |
| | or 4352/1GRP1 | Selector Unit Sub-Assembly (for gear box model) } includes:- |
| A | 4009/102 | Starter Main Plate CP |
| B | 4176/6 | Drive Shaft CP (for single speed model) |
| | or 4352/4 | Drive Shaft CP (for gear box model) |
| C | 4351/7 | Selector Clutch Assembly includes:- |
| D | 4351/9 | Selector Camsleeve CP includes:- |
| | 4351/5 | Selector Camsleeve CP |
| E | 4019/55 | Collar } fitted to gear box model only |
| F | 4019/46 | Special Square Nut } fitted to gear box model only |
| G | 4172/5 | Driven Gear CP (for single speed model) |
| | or 4172/3 | Driven Gear CP (for gear box model) |
| H | 4171/8 | Tie Bar |

The following parts are used only on Selector Unit S4352 (Gear Box Model)

| | | |
|---|---|---|
| J | 4172/2A | Driven Gear CP (45.52 Baud) Green Spot |
| | or 4172/1A | Driven Gear CP (75 Baud) Blue Spot |
| K | 4019/7A | Driven Gear CP (50 Baud) Yellow Spot |
| L | 4172/6 | Gear Lever (for 45.52 and 50 Baud machines) |
| | or 4172/7A | Gear Lever (for 50 Baud and 75 Baud machines) |
| M | 4172/10B | Dog |
| N | PP8016 | Shouldered Pin |

## APPENDIX L

## RIBBON UNIT S4167A

See Fig.L.39

| Index Letter | Part No. | Part Name |
|---|---|---|
| A | 4167/3 | Sideplate (RH) CP |
| B | 4167/4 | Sideplate (LH) CP |
| | 4167/2 | Ribbon Feed Lever CP |
| C | 4167/5 | Ribbon Feed Lever Sub CP |
| D | EC1570 | Feed Lever Eccentric |
| | 4167/1A | Ribbon Jumper CP includes:- |
| E | 4167/7 | Ribbon Guide CP |
| F | 4167/8A | Ribbon Jumper Sub CP |
| G | PP6871 | Jumper Roller Pin |
| H | RL1215 | Jumper Roller |
| J | PF1151 | Felt Washer |

## APPENDIX L

## TYPEHEAD CARRIAGE UNIT S4166

See Fig.L.38.

| Index Letter | Part No. | Part No. |
|---|---|---|
| | 4166/1 | Typehead and Carriage CP includes:- |
| A | 4166/2 | Typehead Carriage Casting CP |
| B | 4166/8 | Corrector Arm |
| C | 4166/9 | Spring Anchor Plate |
| D | 4166/10 | Ribbon Feed Bracket |
| E | 4166/11 | Jumper Lift Bracket |
| F | 4166/3 | Track Rail End Casting CP |
| G | 4166/4 | Track Rail End Plate CP |
| H | 4166/12 | Print Rail |
| J | 4166/14 | Guide Rail (2 per set) |
| K | 4166/13 | Typehead Spline Shaft (2 per set) |
| L | PS7131 | Special Screw |
| M | PG7583 | Tension Spring |

## APPENDIX L

GOVERNED MOTOR UNIT S4135 { GROUP 1 200V – 250V
GROUP 2 100V – 130V

See Figs. L.40, L.41

| Index Letter | Part No. | Part Name |
|---|---|---|
| | REF522A | Motor (Main Voltage and frequency to be specified) |
| A | 4018/27A | Motor Base |
| B | PS5032 | Special Screw (3 per unit) |
| C | CB1026 | Connecting Block (2 section) |
| D | CB1025 | Connecting Block (3 section) |
| E | BO4068/1 | Capacitor (0.01 $\mu$ F) |
| F | PK1171 | Capacitor Clip |
| | 4018/13GRP1 | Radio Interference Suppression Unit (for 160V – 270V a.c.) } includes:- |
| | or 4018/13GRP2 | Radio Interference Suppression Unit (for 90V – 150V a.c) } includes:- |
| G | 4018/14 | Mounting Strip |
| H | 4018/26 | Hexagonal Spacer (2 per CP) |
| J | 4018/17GRP1 | Resistor Board CP (for 160V – 270V a.c only) } includes:- |
| | or 4018/17GRP2 | Resistor Board CP (for 90V – 155V a.c. only) } includes:- |
| K | BO2878/2 | Resistor (3.5 ohms) used on group 1 only |
| L | BO3235/1 | Inductor Coil (1.000 $\mu$ H) 2 per CP |
| M | PE2008 | Insulating Bush (4 per CP) |
| N | BO2659 | Capacitor (0.1 $\mu$ F) |
| O | PE1156 | Capacitor Sleeve |
| P | PK1153 | Capacitor Clip |
| Q | 4018/15A | Mounting Bracket |
| | 4018/29 | Plug Assembly CP includes:- |
| R | BO7601/2 | 4-way plug (Painton Inner Assembly P4) |
| S | BO7601/8 | Side Entry Cover |
| T | PK2029 | Cable Clip (2 per unit) |
| U | PK2090 | Cable Clip (2 per unit) |
| V | 4018/30 | Contact Peg |

APPENDIX L

SELECTOR CABLES UNIT S4168

See Fig.L.42

| Index Letter | Part No. | Part Name |
|---|---|---|
| A | 4168/2 | Plunger Block CP |
| B | 4168/13 | Guide |
| C | 4168/1 | Cable Block CP (comprises cable block and outer cable) |
| D | 4168/6 | Inner Wire (5 per unit) |
| | PF1166 | Felt Plug (not shown) for lubricating item E |
| E | 4168/4 | Plunger } 5 of each per unit |
| F | PG5158 | Compression Spring } 5 of each per unit |
| G | 4168/10 | Adjusting Block } 5 of each per unit |
| H | 4168/7 | Transfer Lever Bracket (Front) |
| J | 4168/8 | Transfer Lever Bracket (Rear) |
| K | 4168/9 | Transfer Lever (5 per unit) |
| L | PW5806 | Shim (6 per unit) |
| M | PP6870 | Transfer Lever Spindle (2 per unit) |
| N | PF1167 | Lubricator |
| O | PP6790 | Plunger (5 per unit) |
| P | PG7572A | Tension Spring (5 per assembly) |

APPENDIX L

TRANSMITTER UNIT S4016A

See Fig.L.43

| Index Letter | Part No. | Part Name |
|---|---|---|
| A | 4016/88 | Contact Mounting Plate (for transmitter/ receive machines) |
| B | 4016/57 | Contact Block CP |
| | 4016/44GRP1 | W.R.U. and Bell Contact CP includes:- |
| C | PE5117 | Spacing Block (2 per CP) |
| D | 1835/29 | Alarm Switch Arm (2 per CP) |
| E | PE5004A | Insulator (8 per CP) |
| F | 4016/40 | Contact CP |
| G | 1835/28 | Switch Clamping Plate |
| H | PE1007A | Insulator (4 per CP) |
| J | 4016/42A | Contact Spring CP (position 'A') |
| K | 4016/38A | Contact Spring CP (position 'B') |
| L | 1835/31 | Alarm Circuit Spring CP |
| M | 4016/33 | Contact Assembly 'A' CP |
| N | 4016/34 | Contact Assembly 'B' CP |
| O | 4016/35 | Contact Assembly 'C' CP |
| P | 4016/36 | Start Stop Contact (2 per unit) |
| Q | 4016/53 | Send/Receive Contact Assembly CP |

## APPENDIX L

## TRUE CHARACTER COUNTER CP S4257

See Figs. L.44, L.45, L.46

| Index Letter | Part No. | Part Name |
|---|---|---|
| A | 4257/22 | Main Frame CP |
| B | 4257/21 | Feed Lever CP |
| C | 2084/183 | Feed Pawl CP |
| D | 4257/3 | Transfer Lever |
| E | PF1116 | Lubricating Washer (2 per CP) |
| F | PP8126 | Pivot Pin |
| G | 4257/20 | Reset Bellcrank CP |
| H | 2084/75A | Retention Pawl CP |
| J | PB1024 | Distance Collar |
| K | CS1027 | Set collar and Screw (4 per CP) |
| L | 2085/28 | Contact Operating Lever CP |
| M | PW5143 | Distance Washer |
| N | 2084/8 | Contact Roller |
| O | 23955A | Locking Ring |
| P | 2084/74 | Stop Plate CP |
| Q | 2084/68 | Ratchet Wheel CP |
| R | BO7220/1 | Microswitch |
| S | PS7178 | Special Screw (2 per CP) |
| T | 4257/13 | Roller Bracket |
| U | PG7656 | Tension Spring |
| V | 4257/17 | Spring Anchor |
| W | PG7080 | Tension Spring |
| X | PG7070A | Tension Spring |
| Y | PG7198 | Tension Spring |
| Z | PG7197 | Tension Spring |
| AA | 2084/124 | Clamp Plate |
| AB | PG3074 | Semi-Elliptic Spring |
| AC | 2084/125 | Friction Plate (2 per CP) |
| AD | 2084/126 | Damping Buffer CP |
| AE | PB4947 | Spacing Pillar (2 per CP) |
| AF | PG7176 | Tension Spring |
| AG | PG7076 | Tension Spring |
| AH | CB1143 | 3-way Terminal Block |

The following parts connect the True Character Counter Unit to the Translator Unit.

| | | |
|---|---|---|
| AJ | 4257/10 | Feed Shaft |
| AK | PB1457 | Collar |
| AL | 4257/14 | Link End |
| AM | PF1128 | Lubricating Washer (2 per CP) |

| Index Letter | Part No. | Part Name |
|---|---|---|

The following parts are assembled to the Translator Unit when the machine has a True Character Counter Unit fitted.

| | | |
|---|---|---|
| AN | 4257/26 | Count Lever CP |
| AO | 4257/25 | Cam Roller Arm CP |
| AP | PG7655 | Tension Spring |
| AQ | 4257/6A | Guide Bracket |
| AR | 4257/5 | Guide Bracket |

The following parts are assembled to the Typehead Unit when the machine has a True Character Counter Unit fitted.

| | | |
|---|---|---|
| AS | 4257/16 | E.O.L.I. Lamp Guard |
| AT | 4257/15 | E.O.L.I. Lamp Bracket |
| AU | CD2078 | Cableform CP |
| AV | BO3804/4 | Neon Indicator S.B.C. (for 230/250V machines) |
| | or BO3804/5 | Neon Indicator S.B.C. (for 100/130V machines) |
| | CF1865 | E.O.L.I. Cableform CP (not shown) |

APPENDIX L

REPERFORATING UNIT S4165B { GROUP 1 for Centre Feed machines / GROUP 2 for Advance Feed machines

See Figs. L.47, L.48, L.49, L.50

| Index Letter | Part No. | Part Name | |
|---|---|---|---|
| A | 4165/3A | Perforating Unit Casting CP | |
| | 4165/1GRP1 | Punch Block Head Sub CP (Centre Feed) | } includes:- |
| | 4165/1GRP2 | Punch Block Head Sub CP (Advance Feed) | } |
| B | 4165/10 | Punch Block CP | |
| C | 4165/40 | Cover Plate (Centre Feed) | |
| or | 4165/41 | Cover Plate (Advance Feed) | |
| D | 4165/27 | Shim (0.010 in) 4 max | |
| | PF1170 | Lubricator (not shown) | |

SELECTOR ASSEMBLY

| | | |
|---|---|---|
| E | 4165/19 | Bearing Plate |
| F | 4165/46 | Selector Frame |
| G | PF1169 | Felt Plug |
| H | PW5807 | Special Washer (2 per CP) |
| J | PW5810 | Shim (0.003 in) 10 max |
| K | 4165/26 | Spacer (2 per CP) |
| L | 4165/30 | Selector 'A' |
| M | 4165/31 | Selector 'B' (2 per CP) |
| N | 4165/32 | Selector 'C' (2 per CP) |
| O | 4165/21 | Feed Punch Striker |
| P | PW5809 | Spacer (7 per CP) |
| Q | 4165/20 | Trunnion (2 per CP) |
| R | PW5681 | Shim (8 max per CP) |
| S | PF1138 | Felt Washer |
| T | PP6872 | Pivot Pin |

TAPE FEED ASSEMBLY

| | | |
|---|---|---|
| U | 4165/9 | Feed Spindle CP |
| V | 4165/8 | Pawl Plate CP |
| W | PF1168 | Felt Collar |
| X | 1947/269 | Retention Wheel |
| Y | PB4779 | Collar |
| Z | PW5808 | Special Washer |
| AA | PG7576 | Spring |
| AB | PG7575 | Tension Spring |

RETENTION LEVER ASSEMBLY

| | | |
|---|---|---|
| | 4165/2 | Retention Lever Assembly CP includes:- |
| AC | 4165/12 | Retention Lever Bracket CP |
| AD | 4165/15 | Back Space Lever CP |
| AE | PG7573 | Tension Spring |

| Index Letter | Part No. | Part Name |
|---|---|---|
| AF | 4165/13 | Throwout Lever CP |
| AG | PS7132 | Special Screw |
| AH | 4165/14 | Back Space Pawl CP |
| AJ | PS5724 | Shouldered Screw |
| AK | PW5863 | Shim |
| AL | PB4780 | Collar |
| AM | RL1216 | Roller |
| AN | 4165/11 | Retention Lever CP |
| AO | PG7480 | Spring |
| AP | EC5080 | Eccentric |

TAPE GUIDE AND LATCH

| | | |
|---|---|---|
| AQ | 4165/36 | Latch Support |
| AR | 4058/35 | Tape Guide Frame Latch CP |
| AS | EC5081 | Eccentric |
| AT | 4165/7 | Tape Guide Frame CP |
| AU | PS7133 | Special Screw |
| AV | PG7577 | Spring |
| AW | 4165/29 | Feed Pawl CP |
| AX | PP9242 | Flanged Pin |
| AY | PF1115 | Felt Washer |
| AZ | PG7574 | Pawl Spring |

TAPE GUIDE ASSEMBLY

| | | | |
|---|---|---|---|
| | 4165/90GRP1 | Tape Guide Plate Assembly (Centre Feed) | } includes:- |
| or | 4165/90GRP2 | Tape Guide Plate Assembly (Advance Feed) | } includes:- |
| BA | 4165/95 | Tape Guide Plate (Centre Feed) | |
| or | 4165/99 | Tape Guide Plate (Advance Feed) | |
| BB | 4165/96 | Guide Bracket CP | |
| BC | 4165/93 | Pressure Arm | |
| BD | 4165/94 | Knurled Nut | |
| BE | PG5185 | Compression Spring | |
| BF | 4165/91 | Tape Guide Support Block | |

PUNCH SHAFT

| | | |
|---|---|---|
| BG | 4165/4A | Punch Shaft CP |
| BH | 4165/5 | Punch Shaft Bearing CP |
| BJ | 4165/25 | Punch Spindle |
| BK | PB1979 | Collar |
| BL | 4165/23 | Shim (0.010 in) 4 max |

PLATEN AND TAPE GUIDE

| | | |
|---|---|---|
| BM | 4165/6B | Platen CP |
| BN | 4165/98 | Tape Guide Plate |
| BO | 4014/115 | Tape Retainer |

# APPENDIX L

| Index Letter | Part No. | Part Name |
|---|---|---|
| BP | 3886/142 | Tape Roller |
| BQ | PS5723 | Special Screw |
| BR | PS7134A | Special Screw |
| BS | PP9240B | Special Pin |

# APPENDIX L

## TAPE DRAWER ASSEMBLY

See Fig L.51.

| Index Letter | | Part No. | Part Name | |
|---|---|---|---|---|
| | | 4165/62GRP1 | Single Tape Drawer CP (for 4-row keyboard machines) | includes:- |
| | | 4165/62GRP2 | Single Tape Drawer CP (for 3-row keyboard machines) | |
| | | 4165/62GRP3 | Single Tape Drawer CP (for receiver only machines) | |
| | or | 4165/51GRP1 | Double Tape Drawer CP (for 4-row keyboard machines) | |
| | | 4165/51GRP2 | Double Tape Drawer CP (for 3-row keyboard machines) | |
| | | 4165/51GRP3 | Double Tape Drawer CP (for receiver only machines) | |
| A | | 4165/63 | Tape Drawer Sub CP (for single tape machines) | |
| | or | 4165/55 | Tape Drawer Sub CP (for double tape machines) | |
| B | | 4165/67 | Extension Plate | |
| C | | RL1219 | Tape Drawer Roller (for single tape machines) | |
| | or | RL1218 | Tape Drawer Roller (for double tape machines) | |
| D | | PW5814 | Special Washer | |
| E | | 4165/68 | Tape Drawer Front (for 4-row keyboard machines) | |
| | or | 4165/64 | Tape Drawer Front (for 3-row keyboard machines) | |
| | or | 4165/66 | Tape Drawer Front (for receiver only machines) | |
| F | | 4014/90A | Front Pillar (2 per CP) for 4-row keyboard machines | |
| | or | 4014/138A | Front Pillar (2 per CP) for 3-row keyboard machines | |
| G | | BO8000/3 | Drawer Handle | |
| H | | 4014/91 | Packing Piece (2 per CP) | |
| J | | 4014/92 | Clip (2 per CP) | |
| K | | BO4040/1 | Mortice Spring Ball Catch (2 per CP) | |
| L | | 4165/57 | Tape Guide Bracket (4 per CP) | |
| M | | 4165/53 | Tape Wheel CP (for double tape machines) | |
| N | | 4014/145A | Tape Wheel CP (for single tape machines) | |
| O | | 4165/89 | Drawer Runner (RH) CP | |
| P | | 4165/70 | Drawer Runner (LH) CP | |
| | | 4165/69 | Tape Follower Lever CP (for single tape) machines) | includes:- |
| | or | 4165/52 | Tape Follower Lever CP (for double tape machines) | |
| Q | | 4165/72 | Mounting Plate CP | |
| R | | 4165/76 | Tape Follower Lever CP | |

| Index Letter | Part No. | Part Name | |
|---|---|---|---|
| S | 4165/75 | Switch Operating Lever | |
| T | PW5814 | Special Washer | |
| U | 4165/54 | Tape Follower Lever CP (top) for double tape machines | |
| V | 4165/58 | Switch Operating Lever CP (top) for double tape machines | |
| W | PG7586 | Tape Exhaust Alarm Spring | |
| X | 375173 | Roller | |
| Y | 4165/73 | Roller Bracket (for single tape machines) | |
| Z | 4165/60 | Top Roller Bracket (for double tape machines) | |
| AA | RL1220 | Tape Roller | |
| AB | PS5726 | Roller Pivot | 4 per assembly |
| AC | PB4796 | Pillar | |
| AD | RB1020 | Rubber Foot | |
| AE | PS7240 | Special Screw | |

# APPENDIX L

COVER UNIT S4192 { GROUP 1 (for machines less Tape Backfeed Key)
GROUP 2 (for machines having Run-Out Key and Tape Backfeed)

COVER UNIT 4257/28 (for machines fitted with a True Character Counter)

See Fig. L.52.

| Index Letter | Part No. | Part Name |
|---|---|---|
| A | 4192/1GRP1 | Cover Unit Sub CP (for machines less Tape Backfeed Key) |
| or | 4192/1GRP2 | Cover Unit Sub CP (for machines having Run-Out Key and Tape Backfeed) |
| or | 4257/27 | Cover Unit Sub CP (for machines fitted with a True Character Counter) |
| B | 4192/11 | Window |
| C | 4192/7 | Roller Bracket |
| D | 3886/142 | Tape Roller |
| | | **RUN OUT KEY ASSEMBLY** |
| E | 4192/23 | Tape Run Out Keybar CP includes:- |
| F | KB1006/415 | Keybutton (Run Out) |
| G | 4192/12 | Keybar Guide Bracket (2 off S4192 GRP2 1 off S4192 GRP1) |
| H | 4192/10 | Feed Lever Bracket |
| J | PP6314 | Pivot Pin |
| K | 4192/9 | Tape Run Out Lever CP |
| L | PG7593 | Spring |
| | | **TAPE BACKFEED KEY ASSEMBLY** |
| M | 4192/22 | Tape Back Feed Keybar CP (used on S4192 GRP2 includes:- |
| N | KB1006 | Keybutton |
| O | 4192/18 | Back Feed Lever Bracket (used on S4192 GRP2) |
| P | PP6314 | Pivot Pin |
| Q | PG7594 | Spring (used on S4192 GRP2) |
| R | 4192/17 | Tape Back Feed Lever CP used on S4192 GRP2 |
| S | 4192/20 | Back Feed Lever Shoe CP |
| | | **SIGNAL LAMP MOUNTING** |
| T | 4015/17 | Reflector Clamp Plate } for machines fitted with a True Character Counter. |
| U | BO3806/5 | Signal Lamp Lens } |

## APPENDIX L

## NUMERICAL INDEX


| Part No. | Part Name | Page | Index Letter |
|---|---|---|---|
| 860/115F | Pawl | L51 | AS |
| 1650/306 | Guide Plate | L51 | AT |
| 1835/28 | Switch Clamping Plate | L62 | G |
| 1835/29 | Alarm Switch Arm | L62 | D |
| 1835/31 | Alarm Circuit Spring CP | L62 | L |
| 1947/269 | Retention Wheel | L62 | X |
| 2084/8 | Contact Roller | L63 | N |
| 2084/68 | Ratchet Wheel CP | L63 | Q |
| 2084/74 | Stop Plate CP | L63 | P |
| 2084/75A | Retention Pawl CP | L63 | H |
| 2084/124 | Clamp Plate | L63 | AA |
| 2084/125 | Friction Plate | L63 | AC |
| 2084/126 | Damping Buffer CP | L63 | AD |
| 2084/183 | Feed Pawl CP | L63 | C |
| 2085/28 | Contact Operating Lever CP | L63 | L |
| 3751/3 | Roller | L69 | X |
| 3886/142 | Tape Roller | L48 | U |
| | | L48 | Z |
| | | L67 | BP |
| | | L70 | D |
| 4000/6 | Trip Shaft CP | L49 | AE |
| 4003/63A | Aggregate Levers Assembly | L48 | B |
| 4005/9 | Trip Arm Nut | L56 | X |
| | | L56 | AD |
| 4009/102 | Starter Main Plate CP | L58 | A |
| 4010/35A | Cam Spacer | L56 | O |
| 4010/342 | Support Block | L53 | E |
| 4010/457 | Roller Race | L54 | X |
| S4012 | Governor Unit | L48 | J |
| 4014/10 | Resistor Clip | L49 | AR |
| 4014/25 | 3-way Plug CP | L50 | – |
| 4014/26 | 4-way Plug | L50 | – |
| 4014/27 | Transmitter Cableform CP | L50 | – |
| 4014/69 | 3-way Plug CP | L50 | – |
| 4014/74 | Cableform CP | L50 | – |
| 4014/90A | Front Pillar | L68 | F |
| 4014/91 | Packing Piece | L68 | H |
| 4014/92 | Clip | L68 | J |
| 4014/95 | Cuttings Box CP | L48 | AC |

| Part No. | Part Name | Page | Index Letter |
|---|---|---|---|
| 4014/115 | Tape Retainer | L48<br>L48<br>L66 | V<br>AA<br>BO |
| 4014/134 | Bracket | L50 | J |
| 4014/138A | Front Pillar | L68 | F |
| 4014/145A | Tape Wheel CP | L68 | N |
| 4014/198 | Motor Capacitor CP | L52 | – |
| 4014/200 | Electrolytic Capacitor CP | L52 | BX |
| 4014/387 | 12-way Plug CP | L50 | – |
| 4014/388 | 12-way Plug CP | L50 | – |
| 4014/389A | 3-way Plug CP | L51 | – |
| 4015/17 | Reflector Clamp Plate | L70 | T |
| S4016A | Transmitter Unit | L47<br>L62 | –<br>– |
| 4016/33 | Contact Assembly 'A' CP | L62 | M |
| 4016/34 | Contact Assembly 'B' CP | L62 | N |
| 4016/35 | Contact Assembly 'C' CP | L62 | O |
| 4016/36 | Start Stop Contact | L62 | P |
| 4016/38A | Contact Spring CP | L62 | K |
| 4016/40 | Contact CP | L62 | F |
| 4016/42A | Contact Spring CP | L62 | J |
| 4016/44 | W.R.U. and Bell Contact CP | L62 | – |
| 4016/53 | Send/Receive Contact Assembly CP | L62 | Q |
| 4016/57 | Contact Block CP | L62 | B |
| 4016/88 | Contact Mounting Plate | L62 | A |
| 4018/13 | R.I.S. Unit | L60 | – |
| 4018/14 | Mounting Strip | L60 | G |
| 4018/15A | Mounting Bracket | L60 | Q |
| 4018/17 | Resistor Board CP | L60 | J |
| 4018/26 | Hexagonal Spacer | L60 | H |
| 4018/27A | Motor Base | L60 | A |
| 4018/29 | Plug Assembly CP | L60 | – |
| 4018/30 | Contact Peg | L60 | V |
| 4019/7A | Driven Gear CP | L58 | K |
| 4019/46 | Special Square Nut | L58 | F |
| 4019/55 | Collar | L58 | E |
| 4058/35 | Tape Guide Frame Latch CP | L66 | AR |
| S4063 | Plug and Cord Arrangement | L48 | – |
| S4135 | Motor Unit | L48<br>L60 | H<br>– |
| S4165B | Reperforating Unit | L48<br>L65 | P<br>– |
| 4165/1 | Punch Block Head Sub CP | L65 | – |
| 4165/2 | Retention Lever Assembly CP | L65 | – |
| 4165/3A | Perforating Unit Casting CP | L65 | A |
| 4165/4A | Punch Shaft CP | L66 | BG |
| 4165/5 | Punch Shaft Bearing CP | L66 | BH |
| 4165/6B | Platen CP | L66 | BM |
| 4165/7 | Tape Guide Frame CP | L66 | AT |
| 4165/8 | Pawl Plate CP | L65 | V |

| Part No. | Part Name | Page | Index Letter |
|---|---|---|---|
| 4165/9 | Feed Spindle CP | L65 | U |
| 4165/10 | Punch Block CP | L65 | B |
| 4165/11 | Retention Lever CP | L66 | AN |
| 4165/12 | Retention Lever Bracket CP | L65 | AC |
| 4165/13 | Throwout Lever CP | L66 | AT |
| 4165/14 | Back Space Pawl CP | L66 | AH |
| 4165/15 | Back Space Lever CP | L65 | AD |
| 4165/19 | Bearing Plate | L65 | E |
| 4165/20 | Trunnion | L65 | Q |
| 4165/21 | Feed Punch Striker | L65 | O |
| 4165/23 | Shim | L66 | BL |
| 4165/25 | Punch Spi[illegible] | L66 | BJ |
| 4165/26 | Spacer | L65 | K |
| 4165/27 | Shim | L65 | D |
| 4165/29 | Feed Pawl CP | L66 | AW |
| 4165/30 | Selector 'A' | L65 | L |
| 4165/31 | Selector 'B' | L65 | M |
| 4165/32 | Selector 'C' | L65 | N |
| 4165/36 | Latch Support | L66 | AQ |
| 4165/40 | Cover Plate | L65 | C |
| 4165/46 | Selector Frame | L65 | F |
| 4165/51 | Double Tape Drawer CP | L68 | – |
| 4165/52 | Tape Follower Lever CP | L68 | – |
| 4165/53 | Tape Wheel CP | L68 | M |
| 4165/54 | Tape Follower Lever CP | L69 | U |
| 4165/55 | Tape Drawer Sub CP | L68 | A |
| 4165/57 | Tape Guide Bracket | L68 | L |
| 4165/58 | Switch Operating Lever CP | L69 | V |
| 4165/60 | Top Roller Bracket | L69 | Z |
| 4165/62 | Tape Drawer Assembly | L47<br>L68 | –<br>– |
| 4165/63 | Tape Drawer Sub CP | L68 | A |
| 4165/64 | Tape Drawer Front | L68 | E |
| 4165/66 | Tape Drawer Front | L68 | E |
| 4165/67 | Extension Plate | L68 | B |
| 4165/68 | Tape Drawer Front | L68 | E |
| 4165/69 | Tape Follower Lever CP | L68 | – |
| 4165/70 | Drawer Runner (LH) CP | L68 | P |
| 4165/71 | Cover Plate CP | L47 | – |
| 4165/72 | Mounting Plate CP | L68 | Q |
| 4165/73 | Roller Bracket | L69 | Y |
| 4165/75 | Switch Operating Lever | L69 | S |
| 4165/76 | Tape Follower Lever CP | L68 | R |
| 4165/89 | Drawer Runner (RH) CP | L68 | O |
| 4165/90 | Tape Guide Plate Assembly | L66 | – |
| 4165/91 | Tape Guide Support Block | L66 | BF |
| 4165/93 | Pressure Arm | L66 | BC |
| 4165/94 | Knurled Nut | L66 | BD |
| 4165/95 | Tape Guide Plate | L66 | BA |
| 4165/96 | Guide Bracket CP | L66 | BB |
| 4165/98 | Tape Guide Plate | L66 | BN |
| 4165/99 | Tape Guide Plate | L66 | BA |
| S4166 | Typehead and Carriage Unit | L48<br>L59 | C<br>– |
| 4166/1 | Typehead and Carriage CP | L59 | – |

| Part No. | Part Name | Page | Index Letter |
|---|---|---|---|
| 4166/2 | Typehead Carriage Casting CP | L59 | A |
| 4166/3 | Track Rail End Casting CP | L59 | F |
| 4166/4 | Track Rail End Plate CP | L59 | G |
| 4166/8 | Corrector Arm | L59 | B |
| 4166/9 | Spring Anchor Plate | L59 | C |
| 4166/10 | Ribbon Feed Bracket | L59 | D |
| 4166/11 | Jumper Lift Bracket | L59 | E |
| 4166/12 | Print Rail | L59 | H |
| 4166/13 | Typehead Spline Shaft | L59 | K |
| 4166/14 | Guide Rail | L59 | J |
| S4167A | Ribbon Unit | L48<br>L59 | D<br>– |
| 4167/1A | Ribbon Jumper CP | L59 | – |
| 4167/2 | Ribbon Feed Lever CP | L59 | – |
| 4167/3 | Sideplate (RH) CP | L59 | A |
| 4167/4 | Sideplate (LH) CP | L59 | B |
| 4167/5 | Ribbon Feed Lever Sub CP | L59 | C |
| 4167/7 | Ribbon Guide CP | L59 | E |
| 4167/8A | Ribbon Jumper Sub CP | L59 | F |
| S4168 | Selector Cables Unit | L48<br>L61 | Q<br>– |
| 4168/1 | Cable Block CP | L61 | C |
| 4168/2 | Plunger Block CP | L61 | A |
| 4168/4 | Plunger | L61 | E |
| 4168/6 | Inner Wire | L61 | D |
| 4168/7 | Transfer Lever Bracket (Front) | L61 | H |
| 4168/8 | Transfer Lever Bracket (Rear) | L61 | J |
| 4168/9 | Transfer Lever | L61 | K |
| 4168/10 | Adjusting Block | L61 | G |
| 4168/13 | Guide | L61 | B |
| 4169/3 | Front Main Frame CP | L55 | AJ |
| 4169/4 | Middle Main Frame CP | L55 | – |
| 4169/5 | Selector Transmitter Lever Assembly CP | L55 | – |
| 4169/6 | Corner Bracket CP | L55 | AK |
| 4169/7 | Middle Main Frame Sub CP | L55 | AL |
| 4169/10 | Pivot Support Bracket | L55 | AN |
| 4169/11 | Selector Lever Pivot | L55 | AM |
| 4169/12 | Translator Unit Base Plate CP | L56 | A |
| 4169/13 | Bearing Bracket CP | L56 | B |
| 4169/15 | Run Out Control Bracket CP | L56 | E |
| 4169/16 | Run Out Control Cam Lever CP | L56 | G |
| 4169/18 | Detent Guide CP | L56 | V |
| 4169/19 | Cam Spacer | L56 | L |
| 4169/21 | Suppression Shaft | L56 | D |
| 4169/24 | Run Out Control Cam | L56 | M |
| 4169/27 | Tape Feed Cam | L56 | K |
| 4169/28 | Punch Cam | L56 | N |
| 4169/29 | Control Lever | L56 | F |
| 4169/30 | Spacing Collar | L56 | S |
| 4169/31A | Count Lever Cam | L56 | R |
| 4169/32A | Rear Frame CP | L53 | – |
| 4169/33 | Punch Link CP | L54 | – |
| 4169/34 | Tape Feed Vertical Lever CP | L53 | – |
| 4169/35 | Tape Feed Vertical Lever Sub CP | L53 | M |

| Part No. | Part Name | Page | Index Letter |
|---|---|---|---|
| 4169/36 | Tape Feed Lever CP | L53 | K |
| 4169/37 | Trip Off CP | L53 | – |
| 4169/38 | Trip Lever CP | L53 | G |
| 4169/39 | Trip Bellcrank CP | L53 | J |
| 4169/40 | Bearing Bracket CP | L54 | AF |
| 4169/41 | Suppression Block CP | L54 | AH |
| 4169/42 | Run Out Key | L54 | AB |
| 4169/43 | Rear Bearing Bracket CP | L54 | AC |
| 4169/44 | Suppression Spade CP | L54 | AE |
| 4169/45 | Tape Feed Latch | L53 | N |
| 4169/46 | Trip Lever Bracket CP | L53 | H |
| 4169/47 | Steady Bracket CP | L53 | C |
| 4169/51A | Sub Plate CP | L53 | B |
| 4169/52 | Vertical Lever Rack Sub CP | L53 | F |
| 4169/58 | Punch Link Lever | L54 | U |
| 4169/59 | Spacer | L54 | Y |
| 4169/64 | Sub Plate Rack | L53 | D |
| 4169/69 | Punch Link | L54 | T |
| 4169/70 | Lower Tape Feed Rack | L53 | S |
| 4169/73 | Vertical Lever Rack CP | L53 | – |
| 4169/76 | Transmitter Cover CP | L47 | – |
| 4169/80 | Rear Frame Sub CP | L53 | A |
| 4171/8 | Tie Bar | L58 | H |
| 4172/1A | Driven Gear CP | L58 | J |
| 4172/2A | Driven Gear CP | L58 | J |
| 4172/3 | Driven Gear CP | L58 | G |
| 4172/5 | Driven Gear CP | L58 | G |
| 4172/6 | Gear Lever | L58 | L |
| 4172/7A | Gear Lever | L58 | L |
| 4172/10B | Dog | L58 | M |
| S4173 | Function Bar Unit | L53<br>L57 | –<br>– |
| 4173/1 | Spring Anchor Bracket CP | L57 | G |
| 4173/2 | Answer Back Trip Shaft Bracket CP | L57 | K |
| 4173/3 | Adjustment Block Bracket CP | L57 | J |
| 4173/4 | Function Bar Rack (Front) | L57 | F |
| 4173/5 | Screwed Stay Rod | L57 | H |
| 4173/7 | Function Bar Rack (Rear) | L57 | E |
| 4173/42 | Bell 'J' Contacts | L57 | D |
| 4173/59 | Line Feed | L57 | – |
| 4173/71 | Carriage Return | L57 | – |
| 4173/81 | Answer Back Trip and W.R.U. Contacts | L57 | C |
| 4173/98 | Space | L57 | – |
| 4173/107 | All Space Dummy | L57 | – |
| 4173/113 | Shift Change 'Figures' | L57 | B |
| 4173/117 | Shift Change 'Letters' | L57 | A |
| 4174/1 | Roller Bracket CP | L48 | – |
| 4174/2 | Roller Bracket CP | L48 | – |
| 4174/3 | Cuttings Chute CP | L48 | AB |
| 4174/4 | Track Rail Bracket | L48 | K |
| 4174/5 | Punch Link End CP | L49 | AM |
| 4174/6 | Starter Trip Lever CP | L49 | AG |

| Part No. | Part Name | Page | Index Letter |
|---|---|---|---|
| 4174/7 | Starter Trip Lever CP | L49 | AD |
| 4174/8 | Disablement Pin CP | L56 | AA |
| 4174/10 | Feed Link End | L52 | BS |
| 4174/11 | Feed Link | L52 | BR |
| 4174/12 | Ribbon Unit Track Rail | L48 | M |
| 4174/15 | Punch Rod CP | L49 | AJ |
| 4174/16 | Connecting Link | L52 | BV |
| 4174/19 | Punch Adjustment Link | L49 | AL |
| 4174/23 | Track Rail Bracket (LH) | L48 | L |
| 4174/24 | Cable Support Bracket | L48 | N |
| 4174/25 | Roller Bracket | L48 | S |
| 4174/26A | Roller Bracket | L48 | X |
| 4174/27 | Track Rail and Rack Cover | L48 | R |
| 4174/29 | Lever Feed Suppression | L56 | W |
| S4176 | Main Base Unit | L48<br>L50 | A<br>– |
| 4176/1 | Governing Resistor Unit CP | L49 | – |
| 4176/2 | Electromagnet Spark Quench | L50 | – |
| 4176/3 | Cam Sleeve CP | L51 | – |
| 4176/4 | Tape Feed Lever CP | L51 | – |
| 4176/5 | Compensator Cam Lever CP | L51 | BF |
| 4176/6 | Drive Shaft CP | L58 | B |
| 4176/7 | Tape Feed Lever Sub CP | L51 | AY |
| 4176/8 | Clutch Spring CP | L51 | AR |
| 4176/9 | Tagboard CP | L50 | F |
| 4176/10 | Run Out Trip Levers CP | L51 | – |
| 4176/11 | Cuttings Box Bracket CP | L50 | C |
| 4176/12A | Bracket Sub CP | L51 | AE |
| 4176/13A | Driven Gear | L51 | AW |
| 4176/14 | Run Out Shaft Gear CP | L51 | AF |
| 4176/15 | Run Out Lever CP | L52 | BM |
| 4176/16 | Run Out Shaft CP | L51 | AD |
| 4176/17 | Block | L52 | BN |
| 4176/18 | Print Spring Adjustment Link | L51 | AC |
| 4176/19 | Resistor Bracket | L49 | AQ |
| 4176/23A | Gear Spindle | L51 | AJ |
| 4176/24 | Bearing Bracket | L51 | AX |
| 4176/25 | Punch Link Guide | L51 | BE |
| 4176/26 | Cam Spacer | L51 | AL |
| 4176/27 | Cam Spacer | L51 | AP |
| 4176/28 | Cam Spacer | L51 | AN |
| 4176/30 | Distance Pillar | L50 | B |
| 4176/31 | Resistor Base Bracket | L49 | AP |
| 4176/32 | Resistor Cover | L49 | – |
| 4176/33 | Fixing Plate | L51 | Z |
| 4176/34 | Fixing Plate | L51 | X |
| 4176/39 | Detent Bearing Bracket | L51 | BG |
| 4176/40 | Detent | L52 | BL |
| 4176/43 | Spring Anchor Bracket | L52 | BH |
| 4176/44 | Cover Plate | L51 | AB |
| 4176/46 | Cam Sleeve | L51 | AK |
| 4176/47 | Punch Cam | L51 | AO |
| 4176/48 | Tape Feed Cam | L51 | AQ |
| 4176/49 | Compensator Cam | L51 | AM |
| 4176/50A | Tape Exhaust Alarm Switch CP | L50 | – |
| 4176/51 | Main Base CP | L50 | A |
| 4176/52 | Run Out Bearing Bracket CP | L51 | AH |

| Part No. | Part Name | Page | Index Letter |
|---|---|---|---|
| 4176/54A | Switch CP | L50 | |
| 4176/55 | Capacitor CP | L50 | – |
| 4176/56 | Starter Switch and Cableform CP | L50 | D |
| 4176/57 | Lever 'All Mark' | L56 | AC |
| 4176/58 | Capacitor CP | L50 | – |
| 4176/60 | Motor Connexion Socket CP | L50 | M |
| 4176/68A | Switch Mounting Bracket | L50 | T |
| 4176/70 | Bearing Bracket CP | L56 | AF |
| 4176/73 | Blade 'All Mark' | L56 | AE |
| 4176/74 | Run Out 'All Mark' Shaft CP | L56 | AB |
| 4176/75 | Resistor CP | L49 | – |
| S4192 | Cover Unit CP | L47<br>L70 | –<br>– |
| 4192/1 | Cover Unit Sub CP | L70 | A |
| 4192/7 | Roller Bracket | L70 | C |
| 4192/9 | Tape Run Out Lever CP | L70 | K |
| 4192/10 | Feed Lever Bracket | L70 | H |
| 4192/11 | Window | L70 | B |
| 4192/12 | Keybar Guide Bracket | L70 | G |
| 4192/14 | Dummy Plinth | L48 | F |
| 4192/17 | Tape Back Feed Lever CP | L70 | R |
| 4192/18 | Back Feed Lever Bracket | L70 | O |
| 4192/20 | Back Feed Lever Shoe CP | L70 | S |
| 4192/22 | Tape Back Feed Keybar CP | L70 | M |
| 4192/23 | Tape Run Out Keybar CP | L70 | E |
| 4220/3 | Contact Mounting Plate | L54 | AD |
| S4257/ | True Character Counter | L49<br>L63 | AW<br>– |
| 4257/3 | Transfer Lever | L63 | D |
| 4257/5 | Guide Bracket | L64 | AR |
| 4257/6A | Guide Bracket | L64 | AQ |
| 4257/10 | Feed Shaft | L63 | AJ |
| 4257/13 | Roller Bracket | L63 | T |
| 4257/14 | Link End | L63 | AL |
| 4257/15 | E.O.L.I. Lamp Bracket | L64 | AT |
| 4257/16 | E.O.L.I. Lamp Guard | L64 | AS |
| 4257/17 | Spring Anchor | L63 | V |
| 4257/19 | Switch Cover CP | L49 | AX |
| 4257/20 | Reset Bellcrank CP | L63 | G |
| 4257/21 | Feed Lever CP | L63 | B |
| 4257/22 | Main Frame CP | L63 | A |
| 4257/25 | Cam Roller Arm CP | L64 | AO |
| 4257/26 | Count Lever CP | L64 | AN |
| 4257/27 | Cover Unit Sub CP | L70 | A |
| 4257/28 | Cover Unit | L47<br>L70 | –<br>– |
| S4351 | Selector Unit | L48<br>L58 | G<br>– |
| 4351/1 | Selector Unit Sub Assembly | L58 | – |
| 4351/5 | Selector Camsleeve CP | L58 | – |
| 4351/7 | Selector Clutch Assembly | L58 | C |
| 4351/9 | Selector Camsleeve CP | L58 | D |

# APPENDIX L

| Part No. | Part Name | Page | Index Letter |
|---|---|---|---|
| S4352 | Selector Unit | L48<br>L58 | G<br>– |
| 4352/1 | Selector Unit Sub Assembly | L58 | – |
| 4352/4 | Drive Shaft CP | L58 | B |
| S4353 | Translator Unit | L48<br>L53 | E<br>– |
| 4353/1 | Translator Unit 2nd Stage | L53<br>L55 | –<br>– |
| 4353/2 | Translator Unit 1st Stage | L53<br>L56 | –<br>– |
| 4353/3 | Contact Mounting Plate CP | L54 | – |
| S4360 | Motor Unit | L48 | H |
| 4360/1 | Contact Cover | L49 | – |
| S4365 | Machine Sub Assembly | L47<br>L48 | –<br>– |
| REF 522A | Motor Governed | L60 | – |
| 23955A | Locking Ring | L63 | O |

BO NUMBERS (BOUGHT OUT)

| | | | |
|---|---|---|---|
| BO1701 | Insulating Bead | L49 | AV |
| BO1840A | Delta Capacitor | L50 | Q |
| BO2633/1 | Ink Ribbon Black | L49 | – |
| BO2636/1 | Resistor | L50 | K |
| BO2649 | Capacitor | L50 | O |
| BO2659 | Capacitor | L60 | N |
| BO2878/2 | Resistor | L60 | K |
| BO3235/1 | Inductor Coil | L60 | L |
| BO3804/4 | Neon Indicator | L64 | AV |
| BO3804/5 | Neon Indicator | L64 | AV |
| BO3806/5 | Signal Lamp Lens | L70 | U |
| BO3807 | Starter Microswitch | L50 | E |
| BO3811/4 | 12 Way Panel Mounting Plug | L51 | W |
| BO3815/7 | Resistor | L49 | AU |
| BO3816/4 | 3 Way Plug | L51 | Y |
| BO3853A | Ball Thrust Bearing | L51 | – |
| BO4040/1 | Mortice Spring Ball Catch | L68 | K |
| BO4063/2 | Cable Cleat | L49<br>L51 | AH<br>AA |
| BO4063/5 | Cable Clip | L51 | – |
| BO4068/1 | Capacitor | L60 | E |
| BO4092A/5 | Capacitor | L52 | – |
| BO4092A/6 | Capacitor | L52 | – |
| BO4092A/7 | Capacitor | L52 | – |
| BO4122/1 | Capacitor | L52 | – |
| BO4122/3 | Capacitor | L52 | – |
| BO4155 | Capacitor | L50 | O |
| BO5201/11 | Capacitor | L50 | G |
| BO7220/1 | Microswitch | L53 | R |
| BO7220/2 | Microswitch | L50 | U |
| BO7229/3 | Microswitch Actuator | L50 | V |

| Part No. | Part Name | Page | Index Letter |
|---|---|---|---|
| BO7601/2 | 4 Way Plug | L60 | R |
| BO7601/3 | 4 Way Socket | L50 | N |
| BO7601/8 | Side Entry Cover | L60 | S |
| BO8000/3 | Drawer Handle | L68 | G |
| **CB NUMBERS (CONNEXION BLOCKS)** | | | |
| CB1025 | Connecting Block | L60 | D |
| CB1026 | Connecting Block | L60 | C |
| CB1143 | 3 Way Terminal Block | L63 | AH |
| CB1152 | Terminal Strip | L50 | R |
| **CD NUMBERS (CORDS)** | | | |
| CD2078 | Cableform CP | L64 | AU |
| **CF NUMBERS (CABLE FORMS)** | | | |
| CF1865 | E.O.L.I. Cableform CP | L64 | – |
| **CS NUMBERS (SET COLLARS AND SCREWS)** | | | |
| CS1026 | Set Collar and Screw | L54 | AG |
| CS1027 | Set Collar and Screw | L63 | K |
| CS1030 | Set Collar and Screw | L49 | AF |
| **EC NUMBERS (ECCENTRIC SCREWS)** | | | |
| EC1570 | Feed Lever Eccentric | L59 | D |
| EC5080 | Eccentric | L66 | AP |
| EC5081 | Eccentric | L66 | AS |
| EC5082 | Eccentric Adjuster | L51 | AZ |
| EC5083 | Eccentric Screw | L52 | BJ |
| EC5084 | Eccentric Roller Pivot | L51 | BA |
| EC5085 | Eccentric Screw | L54 | AA |
| **GR NUMBERS (GEARS)** | | | |
| GR5010 | Spiral Gear | L51 | AV |
| **KB NUMBERS (KEY BUTTONS)** | | | |
| KB1006 | Keybutton | L70 | N |
| KB1006/145 | Keybutton | L70 | F |
| **KY NUMBERS (KEYS)** | | | |
| KY1052 | Key | L56 | P |
| KY1053 | Key | L56 | T |
| KY1054 | Key | L51 | – |
| **PB NUMBERS (BUSHES)** | | | |
| PB1024 | Distance Collar | L63 | J |
| PB1457 | Collar | L63 | AK |

| Part No. | Part Name | Page | Index Letter |
|---|---|---|---|
| PB1979 | Collar | L66 | BK |
| PB4583 | Bush | L50 | S |
| PB4774 | Bush | L56 | J |
| PB4777 | Spacer | L56 | Q |
| PB4778 | Collar | L56 | H |
| PB4779 | Collar | L65 | Y |
| PB4780 | Collar | L66 | AL |
| PB4796 | Pillar | L69 | AC |
| PB4947 | Spacing Pillar | L63 | AE |
| PE NUMBERS (INSULATORS) | | | |
| PE1007A | Insulator | L62 | H |
| PE1156 | Capacitor Sleeve | L60 | O |
| PE2008 | Insulating Bush | L60 | M |
| PE5005A | Insulator | L62 | E |
| PE5117 | Spacing Block | L62 | C |
| PE5125 | Collar Insulating | L50 | L |
| PE5127 | Insulating Strip | L50 | P |
| PF NUMBERS (LUBRICATORS) | | | |
| PF1114 | Lubricating Washer | L52 | BW |
| PF1115 | Felt Washer | L66 | AY |
| PF1116 | Lubrication Washer | L56 | C |
| | | L63 | E |
| PF1126 | Lubrication Washer | L51 | BC |
| PF1128 | Lubricating Washer | L63 | AM |
| PF1138 | Felt Washer | L65 | S |
| PF1142 | Lubricating Washer | L53 | P |
| | | L56 | Z |
| PF1151 | Lubricating Washer | L59 | J |
| PF1166 | Felt Plug | L61 | – |
| PF1167 | Lubricator | L61 | N |
| PF1168 | Felt Collar | L65 | W |
| PF1169 | Felt Plug | L65 | G |
| PF1170 | Lubricator | L65 | – |
| PF1171 | Lubricating Pad | L48 | O |
| PG NUMBERS (SPRINGS) | | | |
| PG3074 | Semi Elliptic Spring | L63 | AB |
| PG5158 | Compression Spring | L61 | F |
| PG5185 | Compression Spring | L66 | BE |
| PG7003 | Tension Spring | L56 | U |
| PG7070A | Tension Spring | L63 | X |
| PG7076 | Tension Spring | L63 | AG |
| PG7080 | Tension Spring | L63 | W |
| PG7176 | Tension Spring | L63 | AF |
| PG7197 | Tension Spring | L63 | Z |
| PG7198 | Tension Spring | L63 | Y |
| PG7466C | Tension Spring | L57 | – |
| PG7468C | Tension Spring | L57 | – |
| PG7476 | Tension Spring | L52 | BP |
| PG7480 | Spring | L66 | AO |
| PG7552A | Tension Spring | L57 | – |
| PG7557 | Tension Spring | L57 | – |

| Part No. | Part Name | Page | Index Letter |
|---|---|---|---|
| PG7572A | Tension Spring | L61 | P |
| PG7573 | Tension Spring | L65 | AE |
| PG7574 | Pawl Spring | L66 | AZ |
| PG7575 | Tension Spring | L65 | AB |
| PG7576 | Spring | L65 | AA |
| PG7577 | Spring | L66 | AV |
| PG7579 | Tension Spring | L49 | AO |
| PG7580 | Tension Spring | L49 | AN |
| PG7581 | Tension Spring | L52 | BQ |
| PG7582 | Tension Spring | L52 | BO |
| PG7583 | Tension Spring | L59 | M |
| PG7584 | Tape Feed Lever Spring | L53 | L |
| PG7585 | Special Spring | L53 | O |
| PG7586 | Tape Exhaust Alarm Spring | L69 | W |
| PG7593 | Spring | L70 | L |
| PG7594 | Spring | L70 | Q |
| PG7655 | Tension Spring | L64 | AP |
| PG7656 | Tension Spring | L63 | U |
| PK NUMBERS (CLEATS) | | | |
| PK1153 | Capacitor Clip | L60 | P |
| PK1171 | Capacitor Clip | L60 | F |
| PK2029 | Cable Clip | L60 | T |
| PK2063 | Clamp | L50 | H |
| PK2090 | Cable Clip | L60 | U |
| PN NUMBERS (NUTS) | | | |
| PN5048 | Special Nut | L51 | – |
| PP NUMBERS (PINS) | | | |
| PP1066 | Parallel Pin | L51 | AU |
| PP5598 | Threaded Pin | L49 | AS |
| PP5622 | Threaded Pin | L48 | T |
| PP6309 | Detent Pivot | L52 | BK |
| PP6314 | Pivot Pin | L70 | J |
| | | L70 | P |
| PP6790 | Plunger | L61 | O |
| PP6870 | Transfer Lever Spindle | L61 | M |
| PP6871/ | Jumper Roller Pin | L59 | G |
| PP6872 | Pivot Pin | L65 | T |
| PP6873 | Pivot Pin | L56 | Y |
| PP6874 | Pivot Pin | L49 | AX |
| PP7947 | Shouldered Pin | L53 | R |
| PP8016 | Shouldered Pin | L58 | N |
| PP8126 | Pivot Pin | L63 | F |
| PP9240B | Special Pin | L67 | BS |
| PP9242 | Flanged Pin | L66 | AX |
| PS NUMBERS (SCREWS) | | | |
| PS5032 | Special Screw | L60 | B |
| PS5723 | Special Screw | L48 | Y |
| | | L67 | BQ |

| Part No. | Part Name | Page | Index Letter |
|---|---|---|---|
| PS5724 | Shouldered Screw | L66 | AJ |
| PS5725 | Shouldered Screw | L54 | V |
| PS5726 | Roller Pivot | L69 | AB |
| PS6123 | Special Screw | L48 | – |
| PS7131 | Special Screw | L59 | L |
| PS7132 | Special Screw | L66 | AG |
| PS7133 | Special Screw | L66 | AU |
| PS7134A | Special Screw | L67 | BR |
| PS7135 | Pillar | L47 | – |
| PS7136 | Shouldered Screw | L52 | BU |
| PS7178 | Special Screw | L63 | S |
| PS7240 | Special Screw | L69 | AE |
| PW NUMBERS (WASHERS) | | | |
| PW5143 | Distance Washer | L63 | M |
| PW5258 | Special Washer | L48 | W |
| PW5681 | Shim | L65 | R |
| PW5710 | Special Washer | L53 | Q |
| PW5716 | Special Washer | L48 | – |
| PW5719 | Special Washer | L48 | – |
| PW5741 | Shim | L51 | AG |
| PW5746 | Special Washer | L49 | AT |
| PW5748 | Special Washer | L54 | W |
| PW5806 | Shim | L61 | L |
| PW5807 | Special Washer | L65 | H |
| PW5808 | Special Washer | L65 | Z |
| PW5809 | Spacer | L65 | P |
| PW5810 | Shim | L65 | J |
| PW5811 | Special Washer | L51 | BD |
| PW5812 | Shim | L52 | BT |
| PW5813 | Special Washer | L54 | Z |
| PW5814 | Special Washer | L68<br>L69 | D<br>T |
| PW5863 | Shim | L66 | AK |
| RB NUMBERS (RUBBER FEET) | | | |
| RB1020 | Rubber Foot | L69 | AD |
| RL NUMBERS (ROLLERS) | | | |
| RL1184 | Roller | L51 | BB |
| RL1215 | Jumper Roller | L59 | H |
| RL1216 | Roller | L66 | AM |
| RL1218 | Tape Drawer Roller | L68 | C |
| RL1219 | Tape Drawer Roller | L68 | C |
| RL1220 | Tape Roller | L69 | AA |

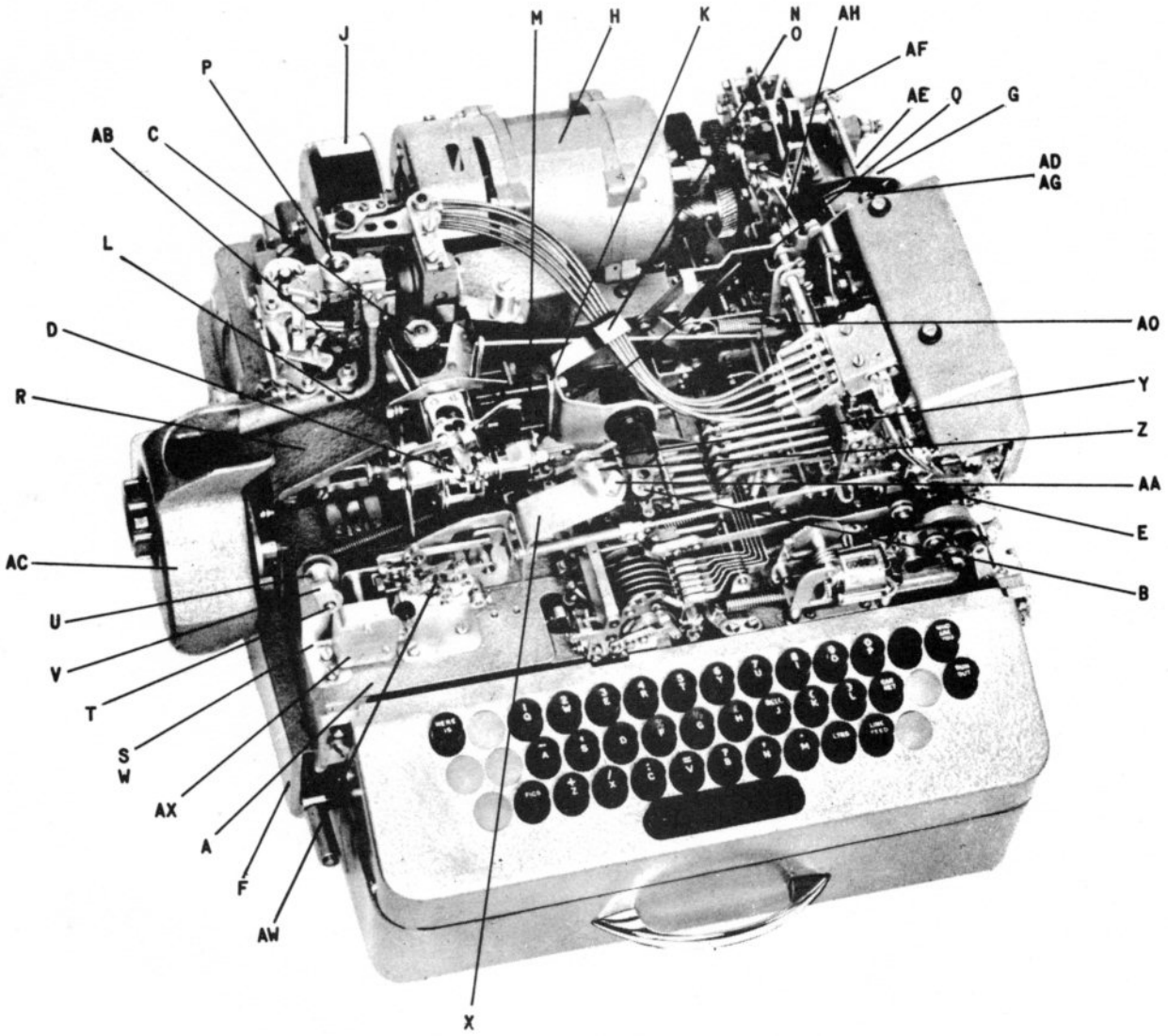


FIG.L.27 MACHINE SUB ASSEMBLY

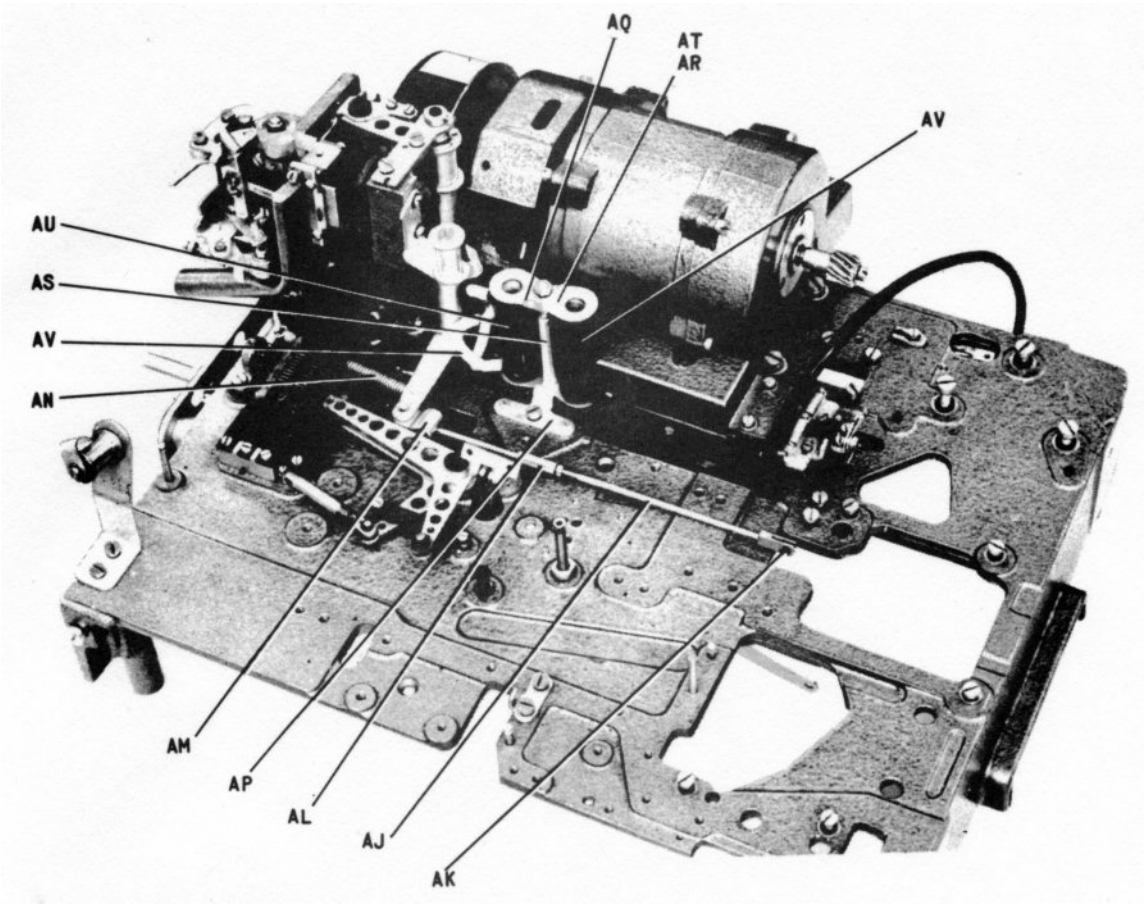


FIG.L.28 PARTIAL MACHINE SUB ASSEMBLY

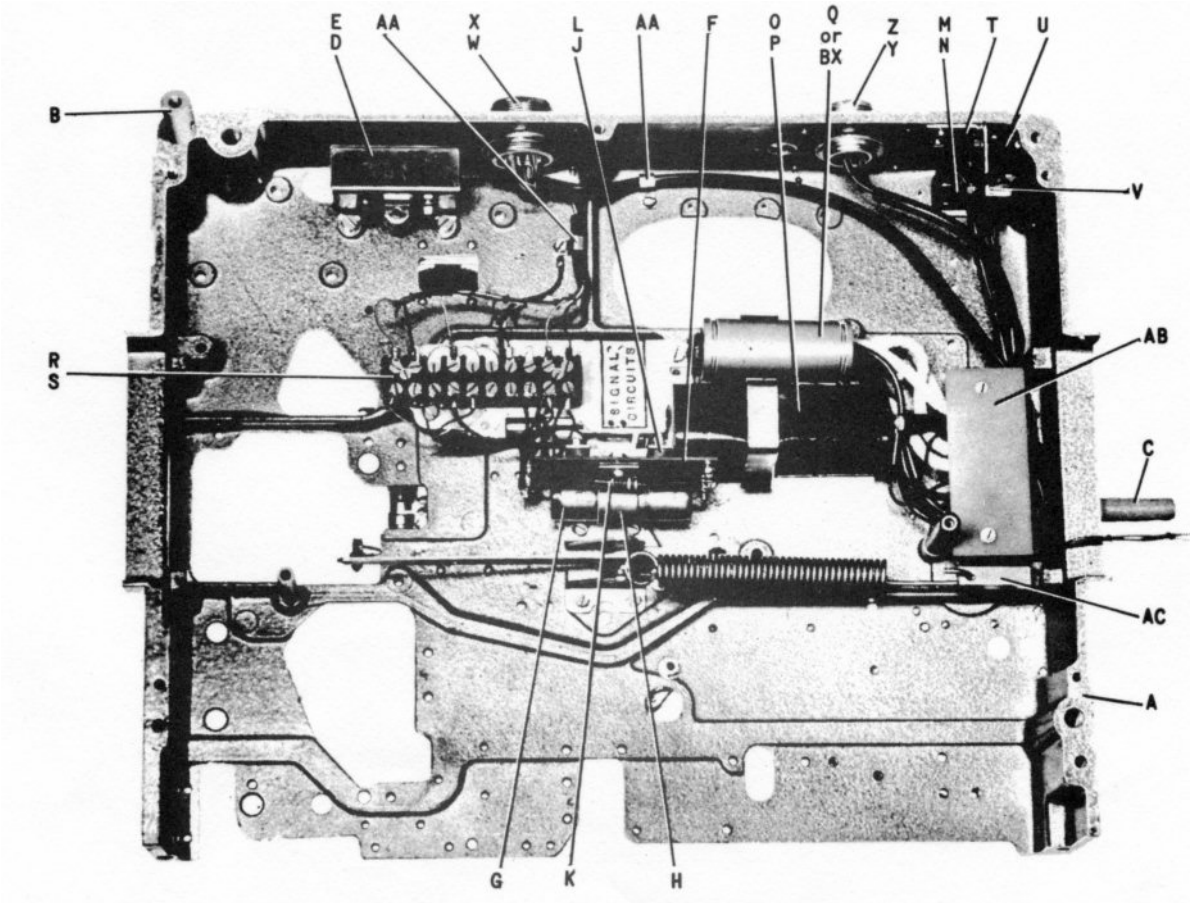


FIG.L.29 MAIN BASE UNIT

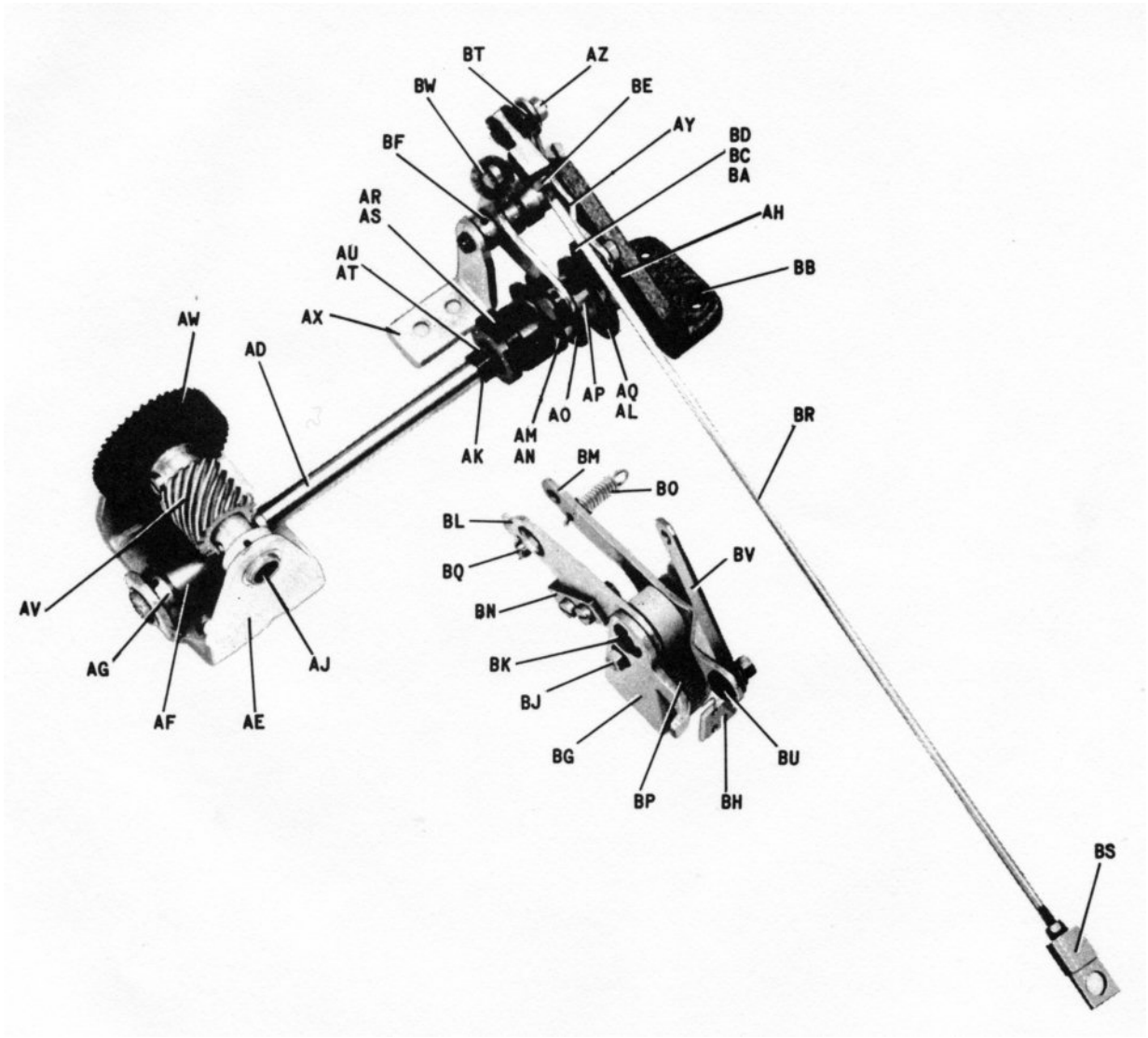


FIG.L.30 TAPE FEED AND RUN OUT COMPONENTS

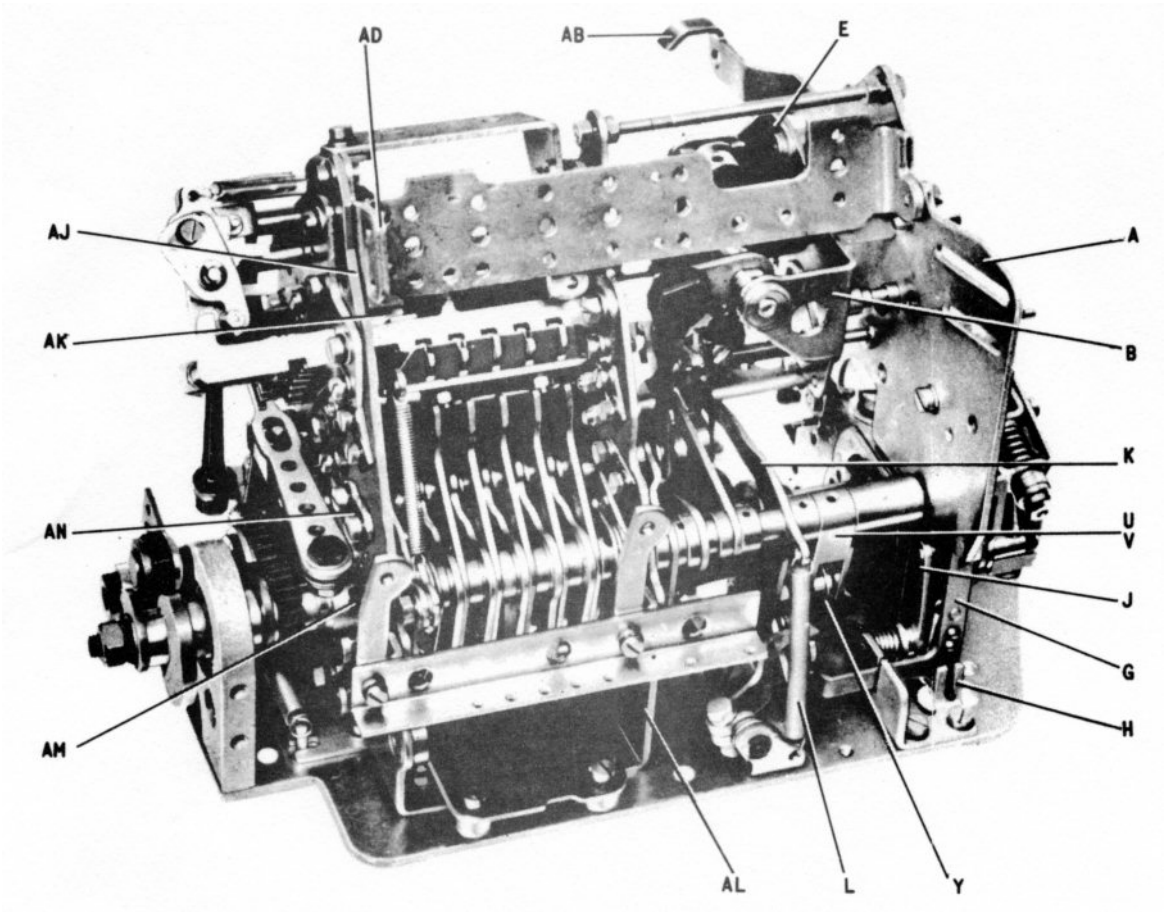


FIG.L.31 TRANSLATOR UNIT

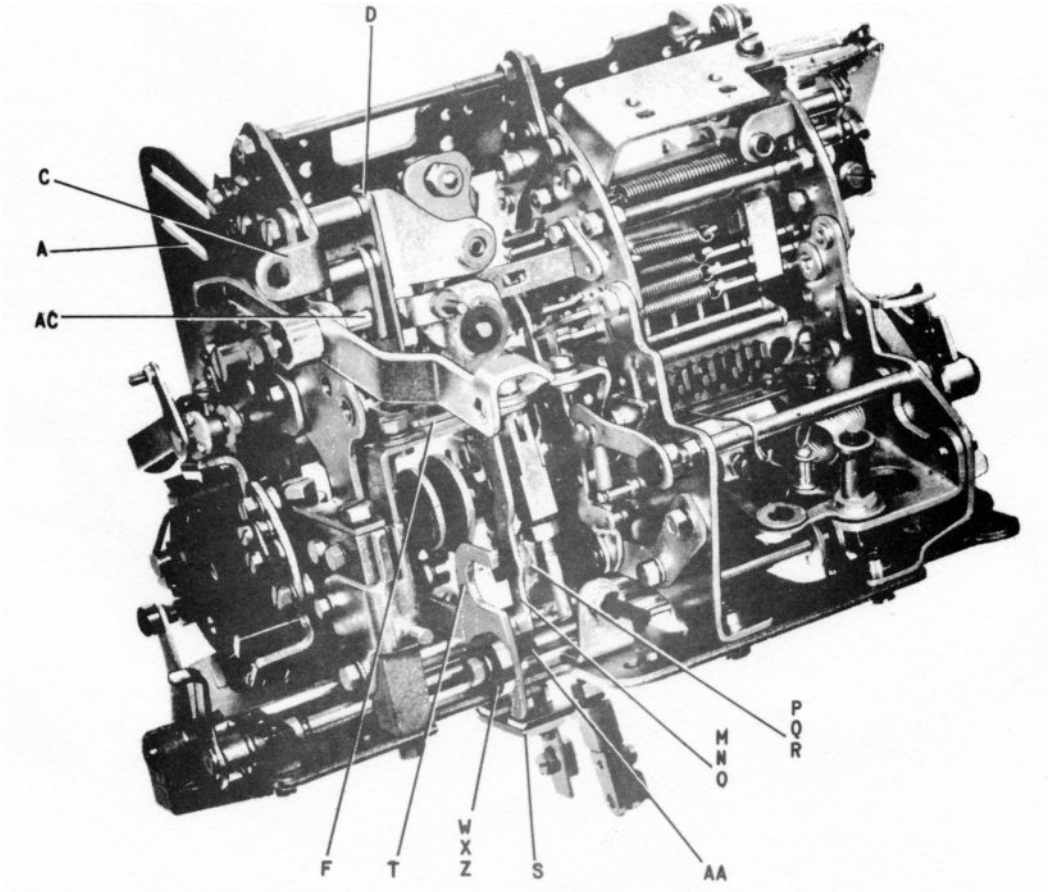


FIG.L.32 TRANSLATOR UNIT

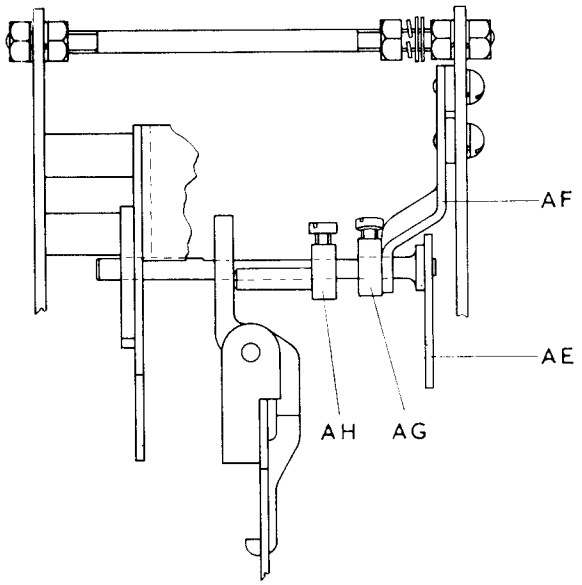


FIG.L.33 TAPE FEED SUPPRESSION PARTS

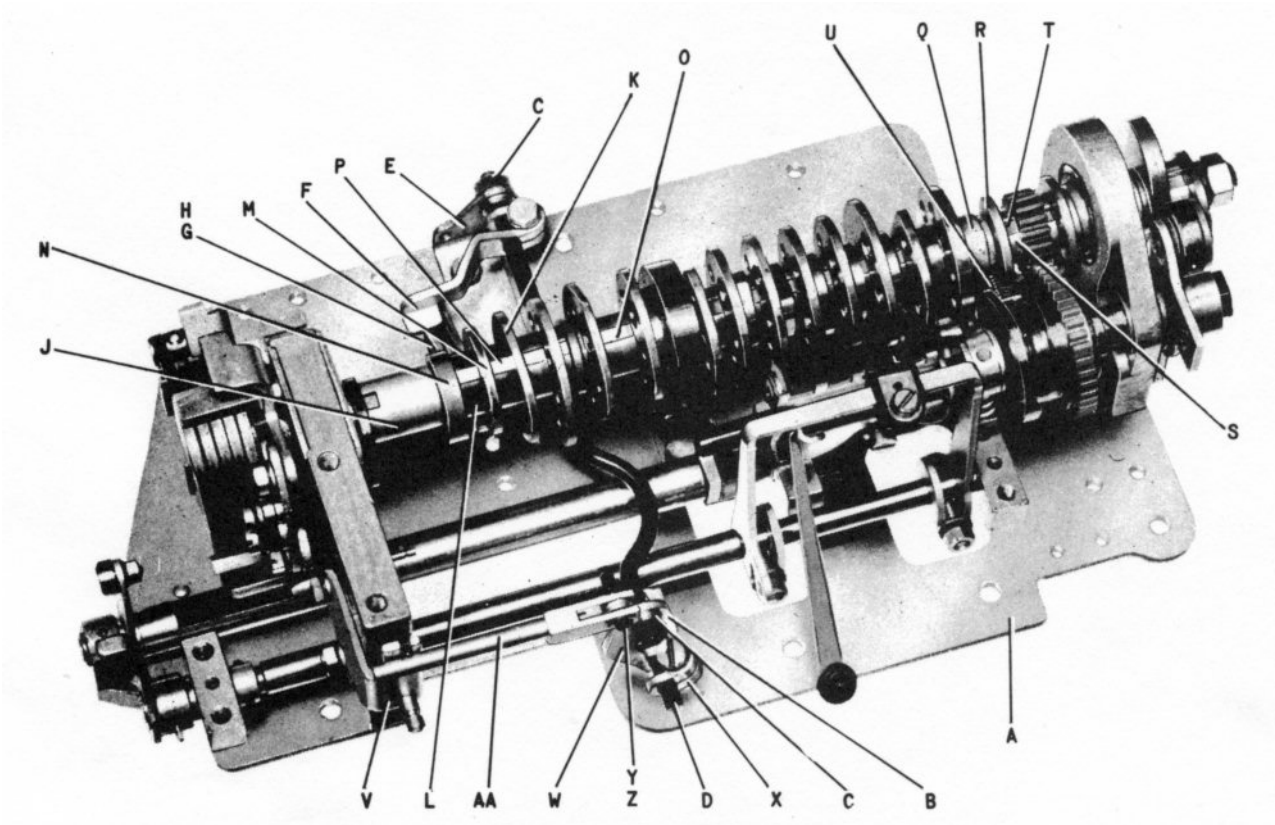


FIG.L.34 TRANSLATOR UNIT IST STAGE

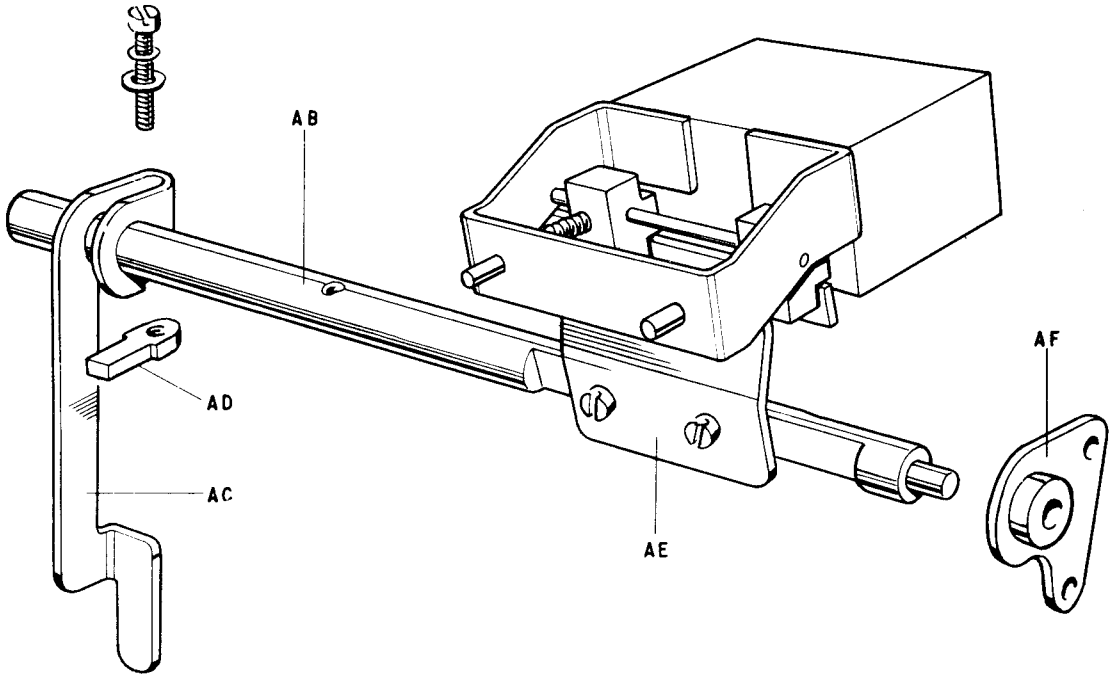


FIG.L.35 "ALL MARK" RUN OUT PARTS

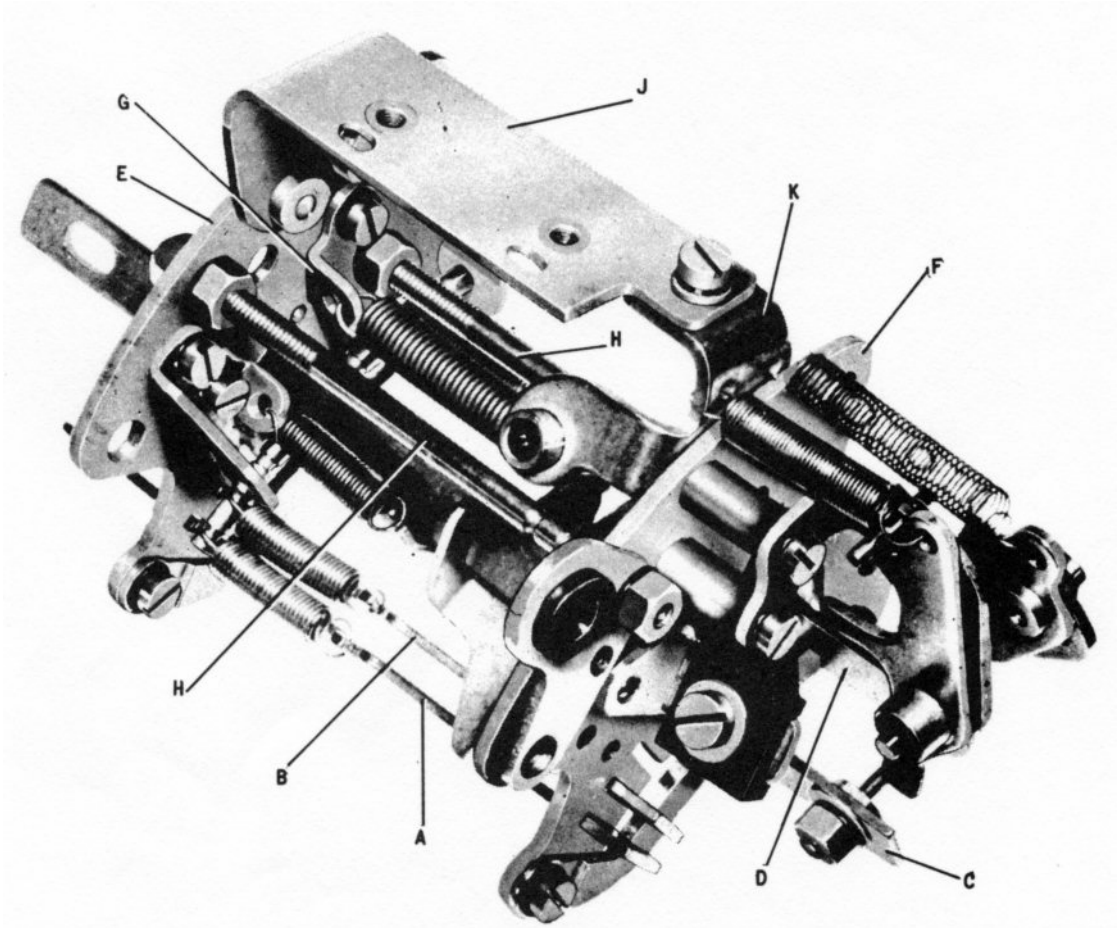


FIG.L.36 FUNCTION BAR UNIT

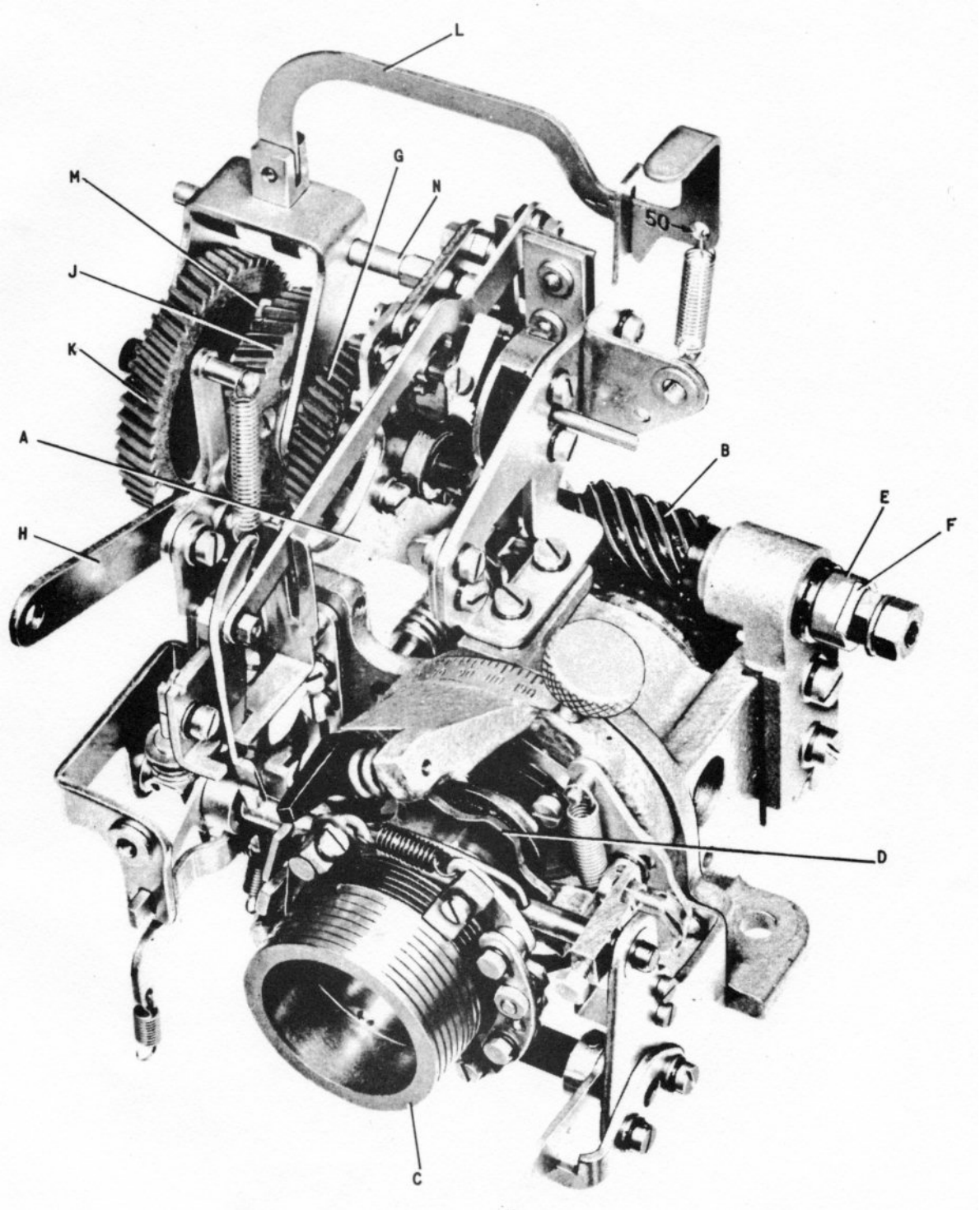


FIG.L.37 SELECTOR UNIT

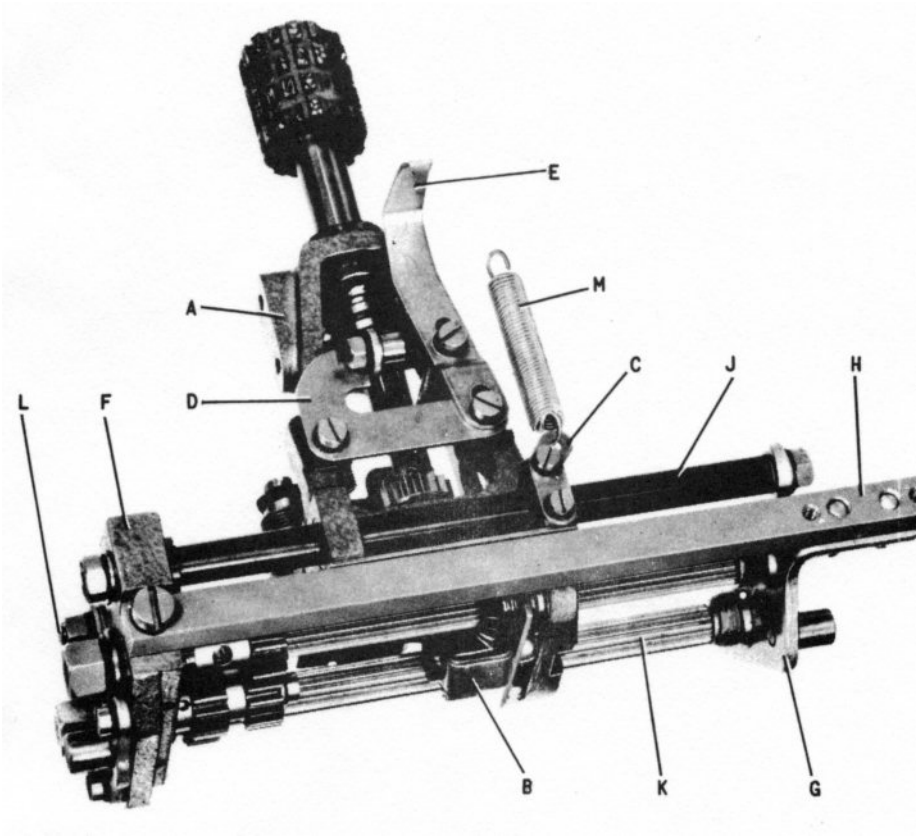


FIG.L.38 TYPEHEAD CARRIAGE UNIT

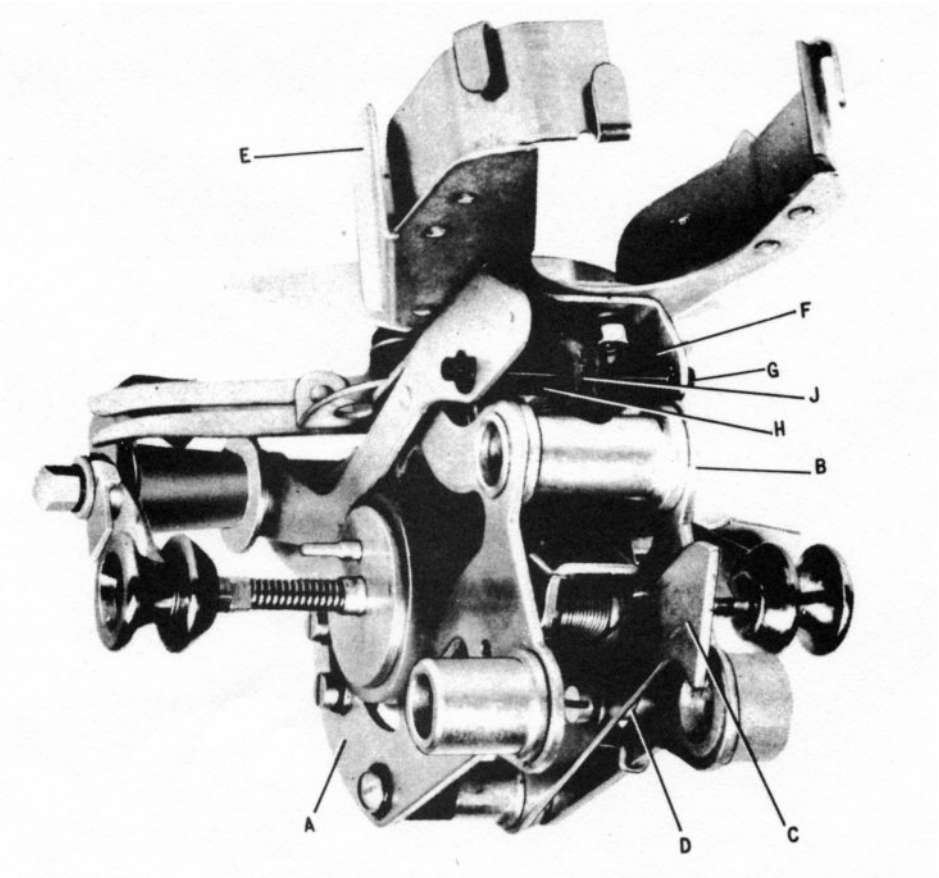


FIG.L.39 RIBBON UNIT

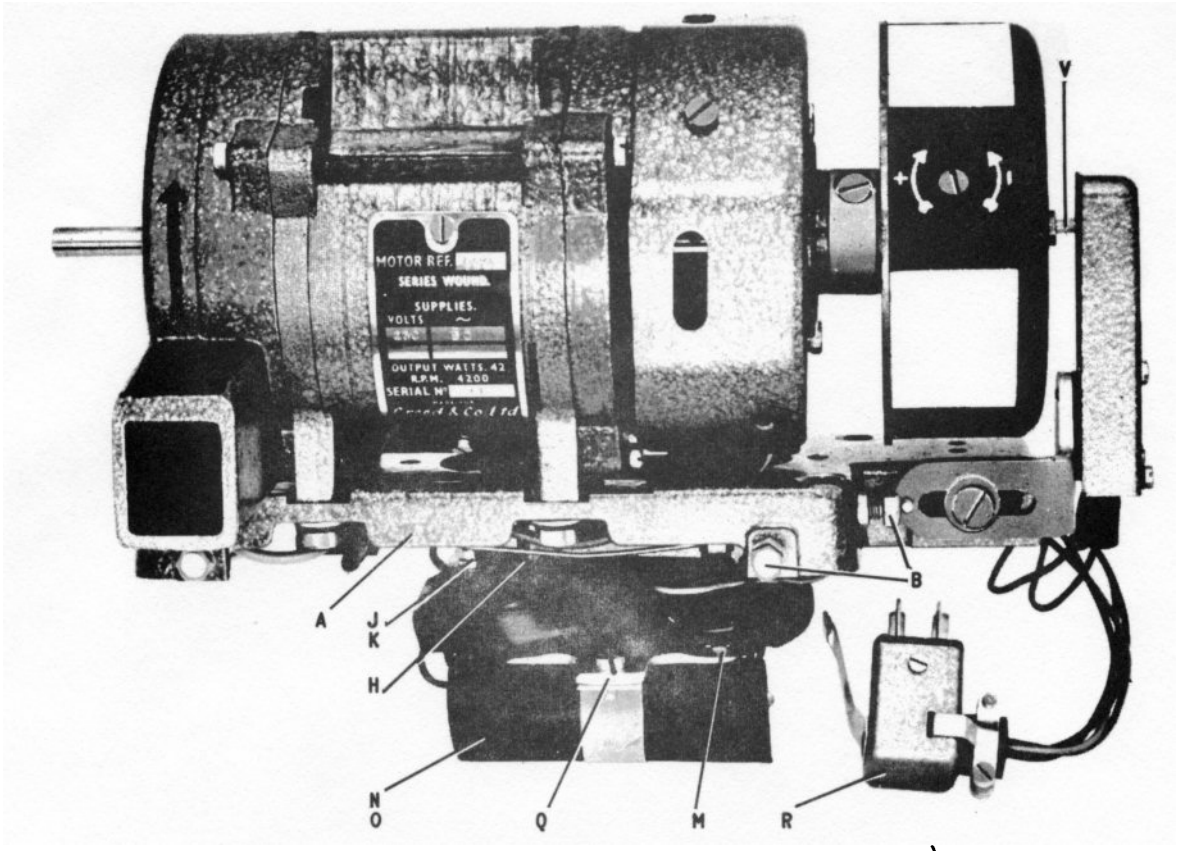


FIG.L.40 GOVERNED MOTOR UNIT (TOP VIEW)

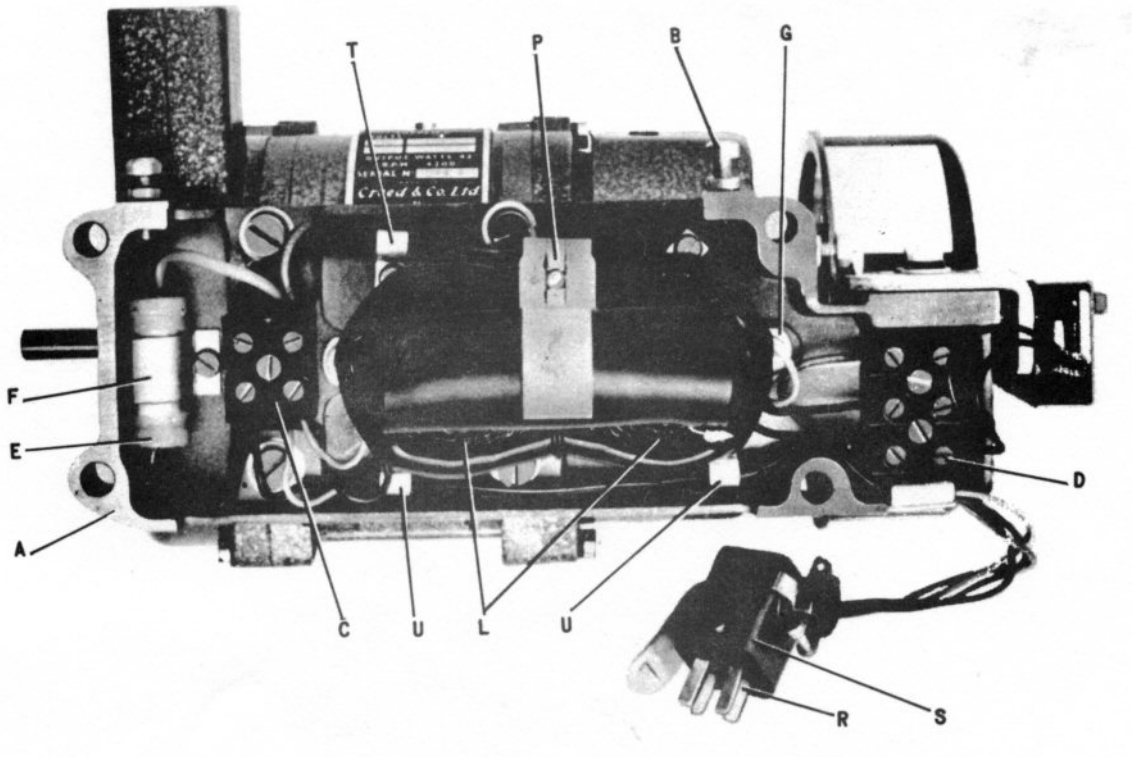


FIG.L.41 GOVERNED MOTOR UNIT (UNDERSIDE VIEW)

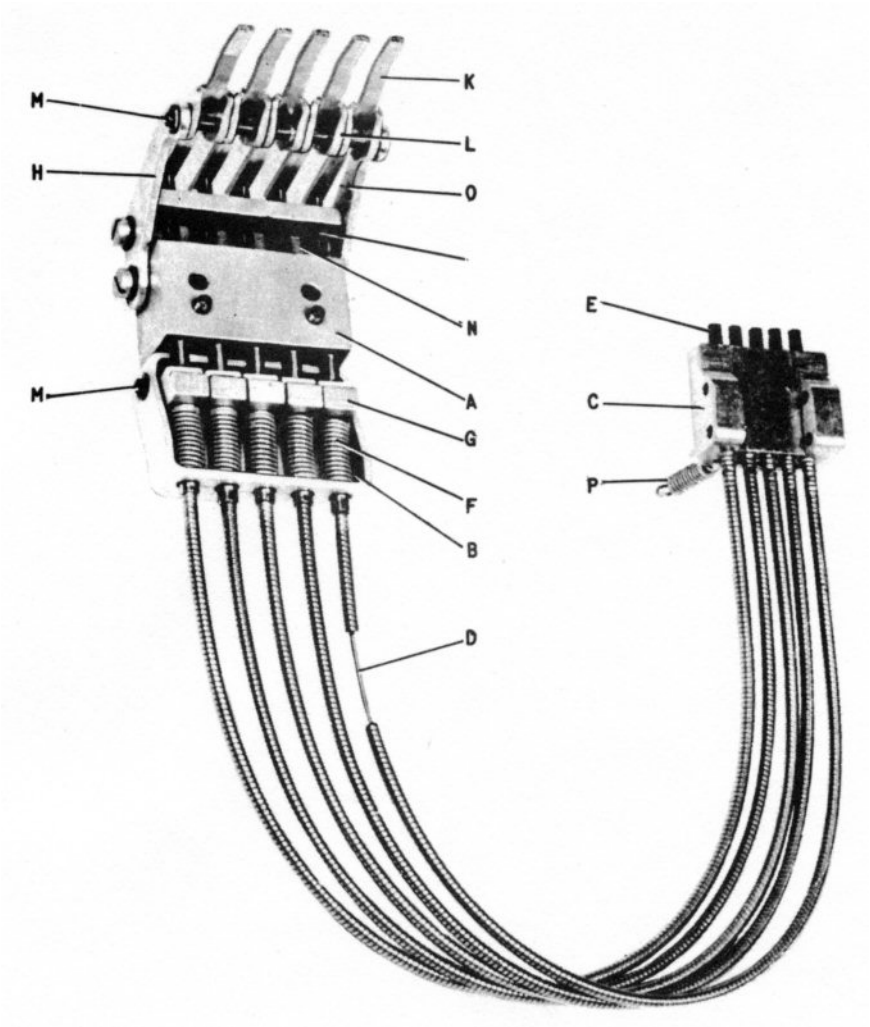


FIG.L.42 SELECTOR CABLES UNIT

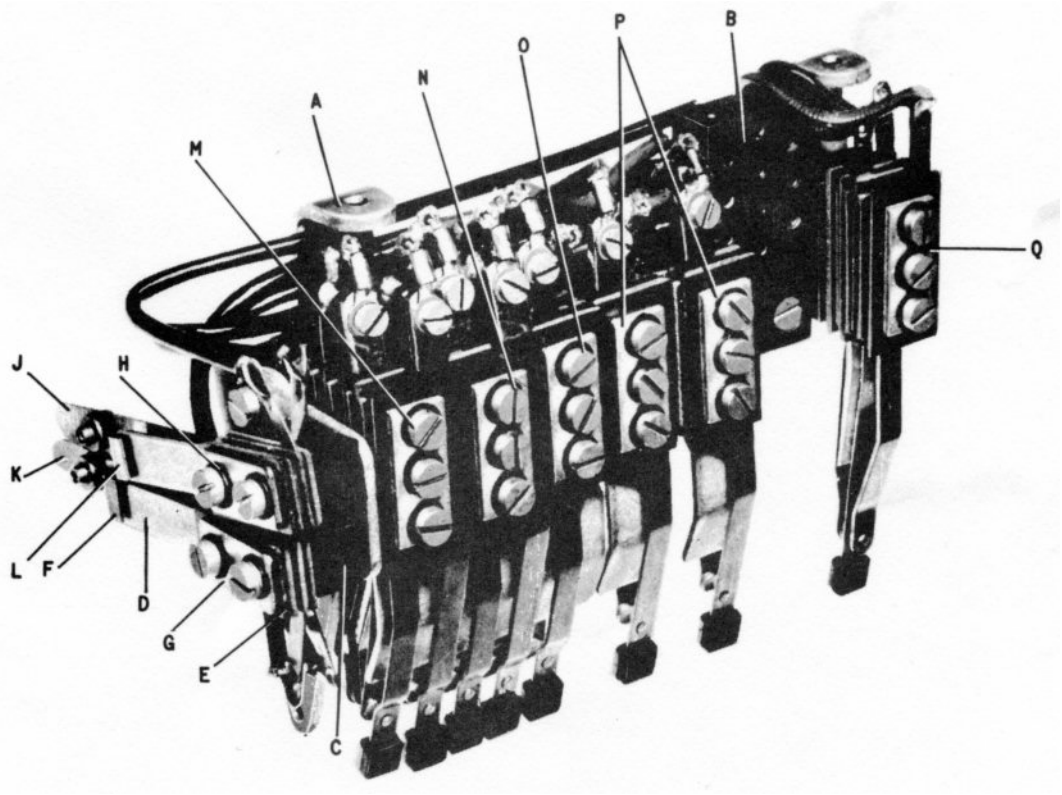


FIG.L.43 TRANSMITTER UNIT

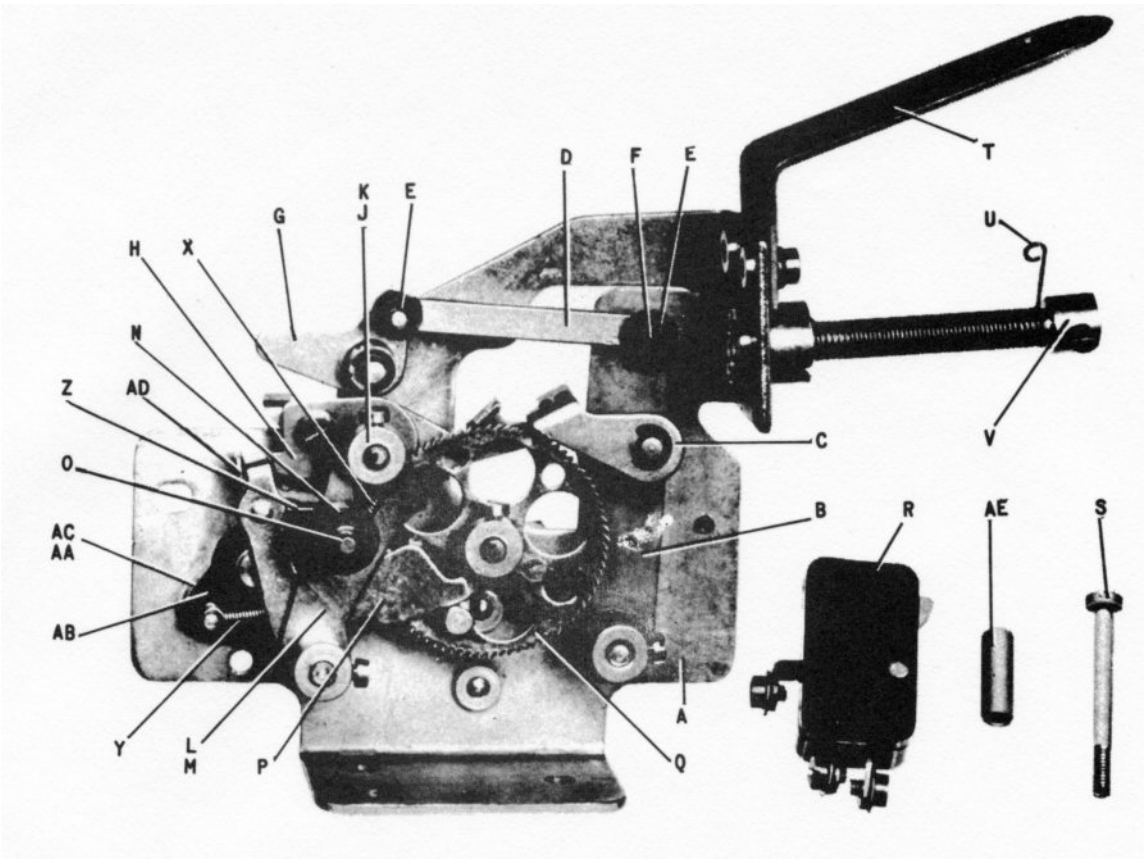


FIG.L.44 TRUE CHARACTER COUNTER (FRONT VIEW)

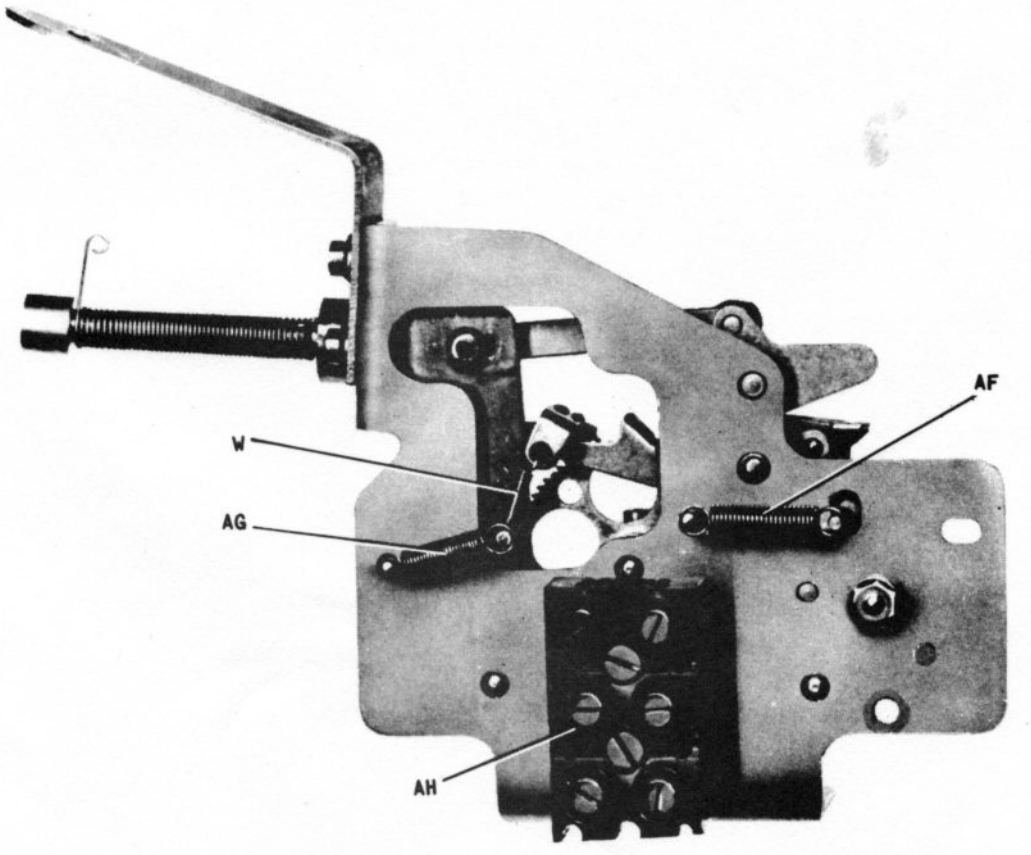


FIG.L.45 TRUE CHARACTER COUNTER (REAR VIEW)

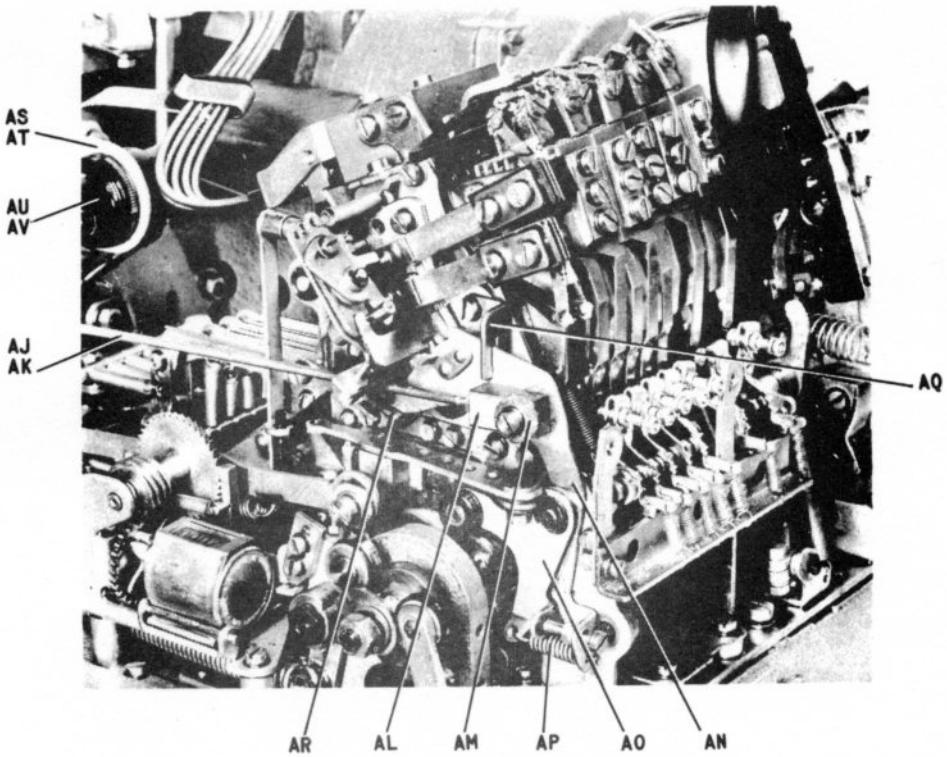


FIG.L.46 TRUE CHARACTER COUNTER
(ADDITIONAL PARTS FITTED TO TRANSLATOR UNIT)

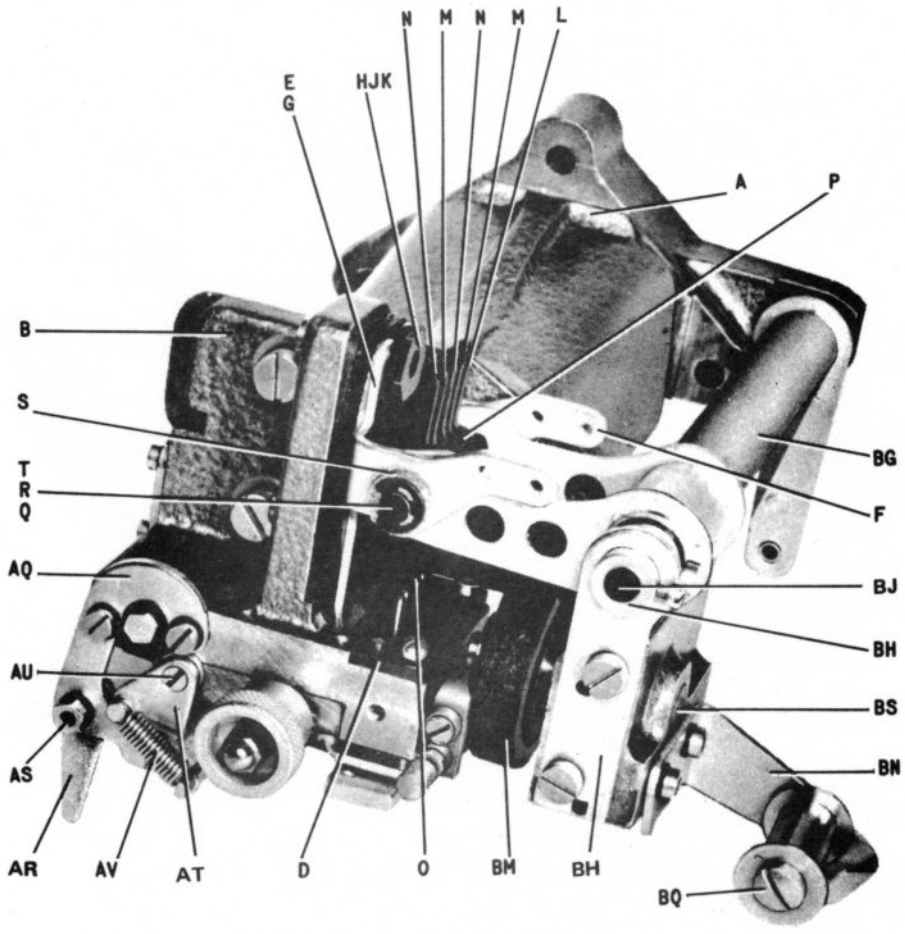


FIG.L.47 REPERFORATING UNIT

48
49

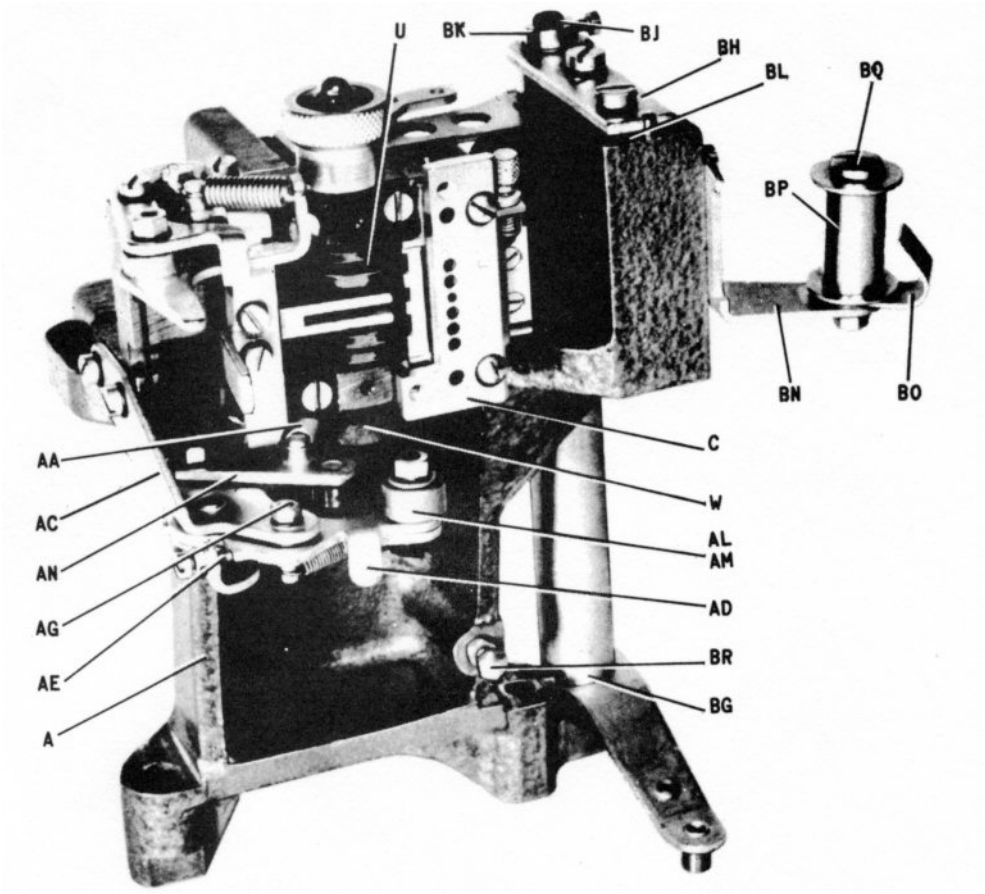


FIG.L.48 REPERFORATING UNIT

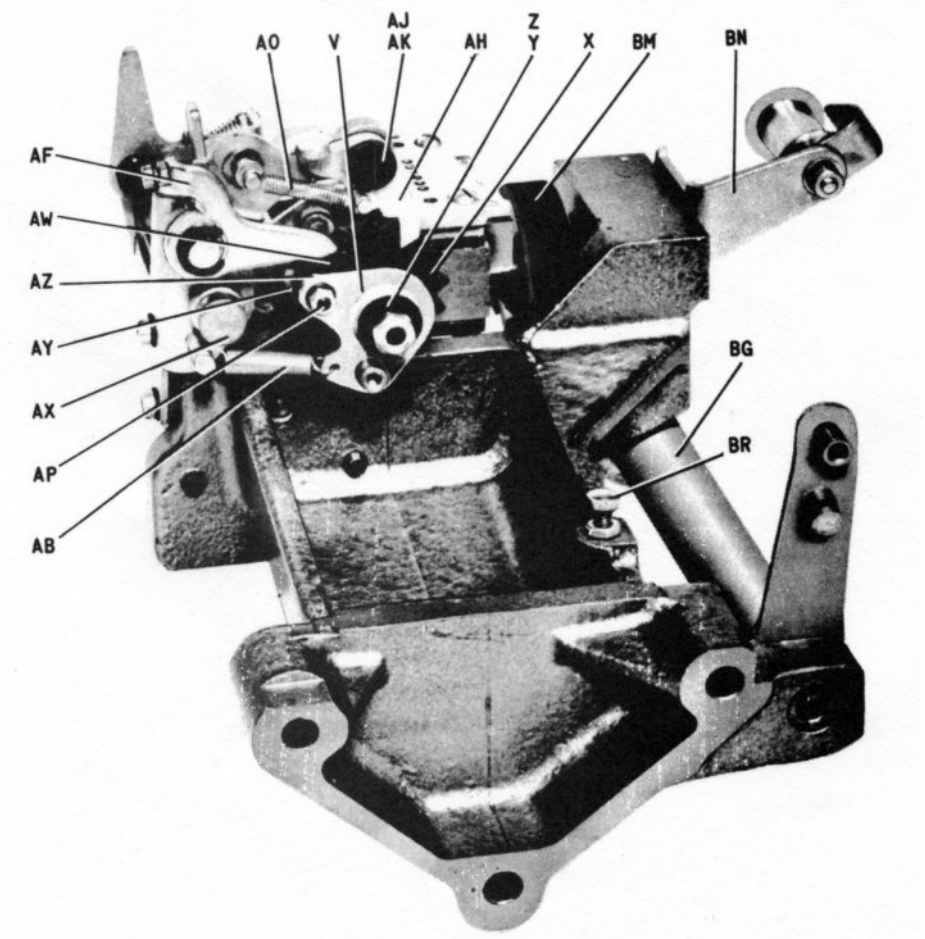


FIG.L.49 REPERFORATING UNIT

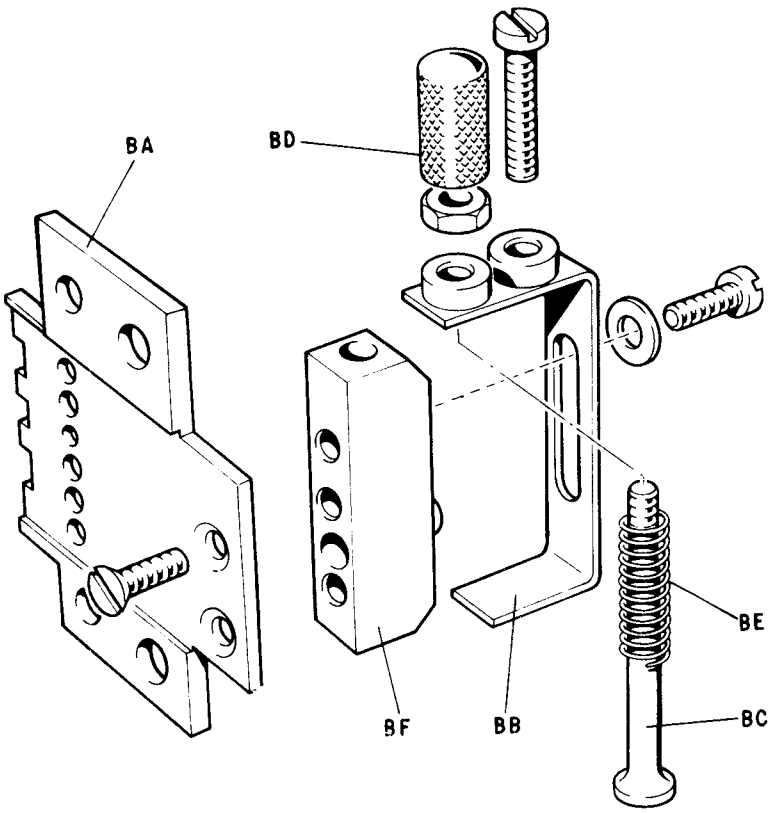


FIG.L.50 TAPE GUIDE ASSEMBLY

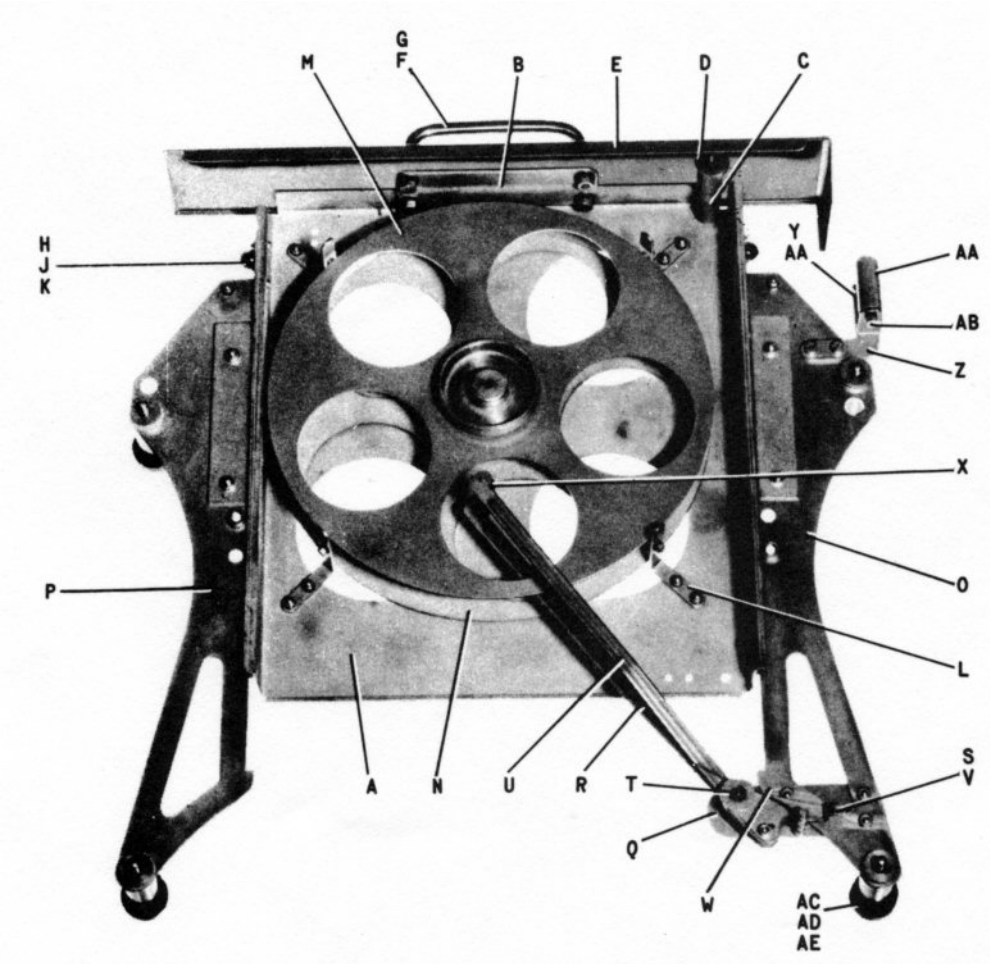


FIG.L.51 TAPE DRAWER ASSEMBLY

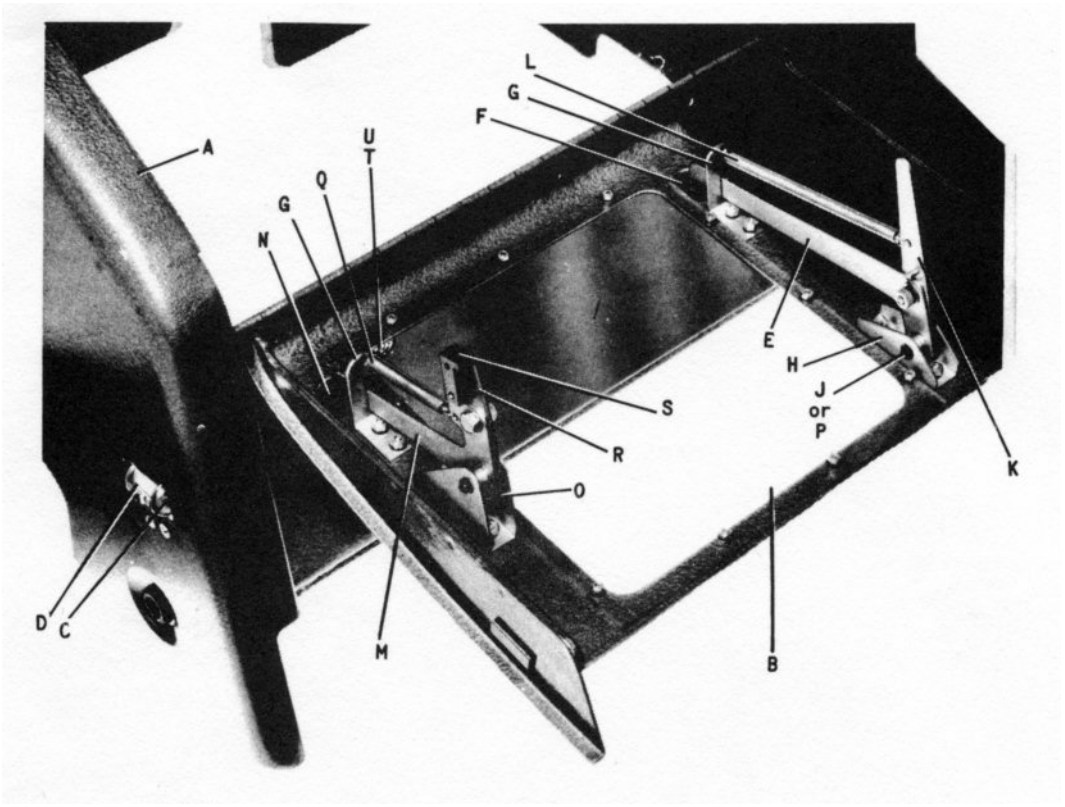


FIG.L.52 COVER UNIT

# PART 7

## CONTENTS


| | Page |
|---|---|
| Abbreviations | 3 |
| Aggregate Levers Assembly | 15 |
| Answer Back Unit S4017A | 75 |
| Cover Unit | 95 |
| Electromagnet Unit S4284 | 29 |
| Function Bar Unit S4293 | 41 |
| Governor Contacts CP 4282/6 | 59 |
| Governed Motor Unit S4282 | 57 |
| Governor Unit S4012 | 59 |
| Introduction | 2 |
| Key to Model numbers of machines covered in this Parts List | 5 |
| Keyboard Unit S4008A | 67 |
| Machine Sub-Assembly S4294 | 9 |
| Main Base Unit (Governed Motor) S4275 | 17 |
| Main Base Unit (Synchronous Motor) S4275 | 21 |
| Model 75 Drive Gears | 49 |
| Model 75 Teleprinter | 7 |
| Numerical Index | 99 |
| Operation Counter S4020B | 81 |
| Pictorial Index | 4 |
| Platen Unit S4281 | 63 |
| Plugs and Cords Arrangements | 27 |
| Reperforating Unit S4022A | 83 |
| Ribbon Unit S4001C | 55 |
| Selector Frames Unit S4006 | 73 |
| Selector Unit (Gear Box Model) S4279 | 43 |
| Selector Unit (Single Speed Model) S4278 | 43 |
| Signals Radio Interference Suppression Unit 4275/33 | 79 |
| Spring Drum and End of Line Indicator S4277 | 53 |
| Standard Parts Index | 97 |
| Synchronous Motor Unit S4283 | 61 |
| Tape Drawer and Dummy Plinth | 85 |
| Tape Reader Keyboard Linkage System for Receiver only Machines | 93 |
| Tape Reader Unit S4151 | 87 |
| Translator Unit 1st Stage CP 4280/2 | 31 |
| Translator Unit 2nd Stage CP 4280/3 | 35 |
| Translator Unit 3rd Stage CP S4280 | 37 |
| Transmitter Unit S4016C | 77 |
| Typehead Carriage Unit S4002 | 51 |


*For easy reference listed below are the pages on which parts related to optional facilities are shown*


| | |
|---|---|
| Answer Back Unit | Page 33, 35, 67 |
| Automatic Carriage Return and Line Feed Mechanisms | Page 39, 51 |
| Reperforating Attachment | Page 33 |
| Tape Reader Attachment | Page 67 |
| Two Colour Printing | Page 39, 51, 55, 65 |

# LIST OF ILLUSTRATIONS


Aggregate Levers Assembly ..... Fig.7.7
Answer Back Unit S4017A ..... Fig.7.36
Cover Unit ..... Fig.7.46
Code Frames Assembly 4151/222 ... Fig.7.6
Combination Bar Unit S4164 ..... Fig.7.34
Combination Bar Reset Lever ..... Fig.7.3
Dashpot CP 4014/67D ..... Fig.7.12
Delay Plate CP 4151/37 ..... Fig.7.5
Electromagnet Unit S4284 ..... Fig.7.14
Function Bar Unit S4293 ..... Fig.7.18
Governed Motor Unit S4282 ..... Fig.7.26
Governor Contacts 4282/6 ..... Fig.7.28
Governor Unit S4012 ..... Fig.7.27
Keyboard Unit S4008A ..... Fig.7.32
Keyboard Space Bar Mechanism .... Fig.7.33
Machine Sub Assembly S4294
(Top View) ..... Fig.7.2
Machine Sub Assembly S4294
(Underside View) ..... Fig.7.4
Main Base Unit S4275 Group 1
Governed Motor (Top View) ..... Fig.7.8
Main Base Unit S4275 Group 1
Governed Motor (Underside View) . Fig.7.9
Main Base Unit S4275 Group 2
Synchronous Motor (Top View) .... Fig.7.10
Main Base Unit S4275 Group 2
Synchronous Motor
(Underside View) ..... Fig.7.11
Model 75 Drive Gears ..... Fig.7.22
Model 75 Teleprinter ..... Fig.7.1
Operation Counter S4020B ..... Fig.7.39
Platen Unit S4281 ..... Fig.7.30
Plugs and Cords Arrangements .... Fig.7.13
Reperforating Unit S4022A ..... Fig.7.40
Ribbon Unit S4001C ..... Fig.7.25
Selector Frames S4006 ..... Fig.7.35
Selector Units S4278 and S4279 .. Fig.7.19
Selector Units S4278 and S4279 .. Fig.7.20
Selector Units S4278 and S4279 .. Fig.7.21
Signals Radio Interference
Suppression Unit 4275/33 ..... Fig.7.38
Spring Drum and End-of-Line
Indicator S4277 ..... Fig.7.24
Synchronous Motor Unit S4283 .... Fig.7.29
Tape Drawer and Dummy Plinth .... Fig.7.41
Tape Reader Unit S4151 ..... Fig.7.42
Tape Reader Unit S4151 ..... Fig.7.43
Tape Reader Unit S4151 ..... Fig.7.44
Tape Reader Keyboard Linkage
System for Receiver only Machines Fig.7.45
Translator Unit 1st Stage
CP 4280/2 ..... Fig.7.15
Translator Unit 1st Stage
CP 4280/2 ..... Fig.7.15
Translator Unit 2nd Stage
CP 4280/3 ..... Fig.7.16
Translator Unit 3rd Stage
CP S4280 ..... Fig.7.17
Translator Unit 3rd Stage
CP S4280 ..... Fig.7.17
Transmitter Unit S4016C ..... Fig.7.37
Two Colour Print Parts on
Platen Unit ..... Fig.7.31
Typehead Carriage Unit S4002 .... Fig.7.23

MODEL SEVENTY-FIVE TELEPRINTER

# PARTS LIST

## GENERAL

This section of the manual contains the part numbers and names of those parts of the Model Seventy Five Teleprinter which can be supplied as spares.

At the end of this section is an indexed list showing the quantity of standard nuts, screws, washers, circlips and spring dowel pins used on the machine. The index has been arranged to indicate the size and type of part and its position in the list, e.g. 6LN4 is a 6BA Locknut and fourth in the list of Locknuts; 8SW11 is an 8BA Spring Washer and is eleventh in the list of Spring Washers.

Some of the standard parts shown on the illustrations have a blue ★ against the index reference. This indicates that they have been secured with the plastic retaining compound referred to in Appendix E.

The method of presenting the information in Creed's Parts Lists is constantly under review and customers suggestions for improvement will be carefully considered.

Creed policy is one of continuous improvement and the right is reserved to revise equipment specifications and published details without prior notice. Consequently individual machines may be of an earlier or later pattern than the machine illustrated here. Spares requisitions may nevertheless be based on the published information since all orders and enquiries are checked by the technical order editing department.

To ensure that correct parts are supplied it is essential that the following information is provided when replacement parts are ordered:-

1. Part number
2. Part name
3. Model number
4. Serial number

} as shown on machine nameplate

## ABBREVIATIONS

| | |
|---|---|
| BA | British Association |
| Br | Brass |
| BS | British Standard |
| Cap Hd. | Capstan Head |
| C.C.I.T.T. | International Telegraph & Telephone Consultative Committee |
| Ch. Hd. | Cheese Head |
| CP | The letters CP after some of the part names in this publication are an abbreviation of the words 'complete part', which is an assembly of two or more smaller parts. |
| Csk. Hd. | Countersunk Head |
| Dia. | Diameter |
| E.O.L.I. | End-of-Line Indicator |
| GRP | Group. Some Units of this machine have differences in their assembly to meet the requirements of the various Models. These differences are referred to as Groups. |
| Hex. Hd. | Hexagon Head |
| Inst. Hd. | Instrument Head |
| in. | Inch |
| LH | Left Hand |
| max. | Maximum |
| MS | Mild Steel |
| RH | Right Hand |
| Rd. Hd. | Round Head |
| r.p.m. | Revolutions per minute |
| S.B.C. | Small Bayonet Lamp Cap |
| Scr | Screwed |
| Slt. Hd. | Slotted Head |
| Skt. Hd. | Socket Head |
| S.R.B.F. | Synthetic Resin Bonded Fibre |
| WRU? | Who Are You? |

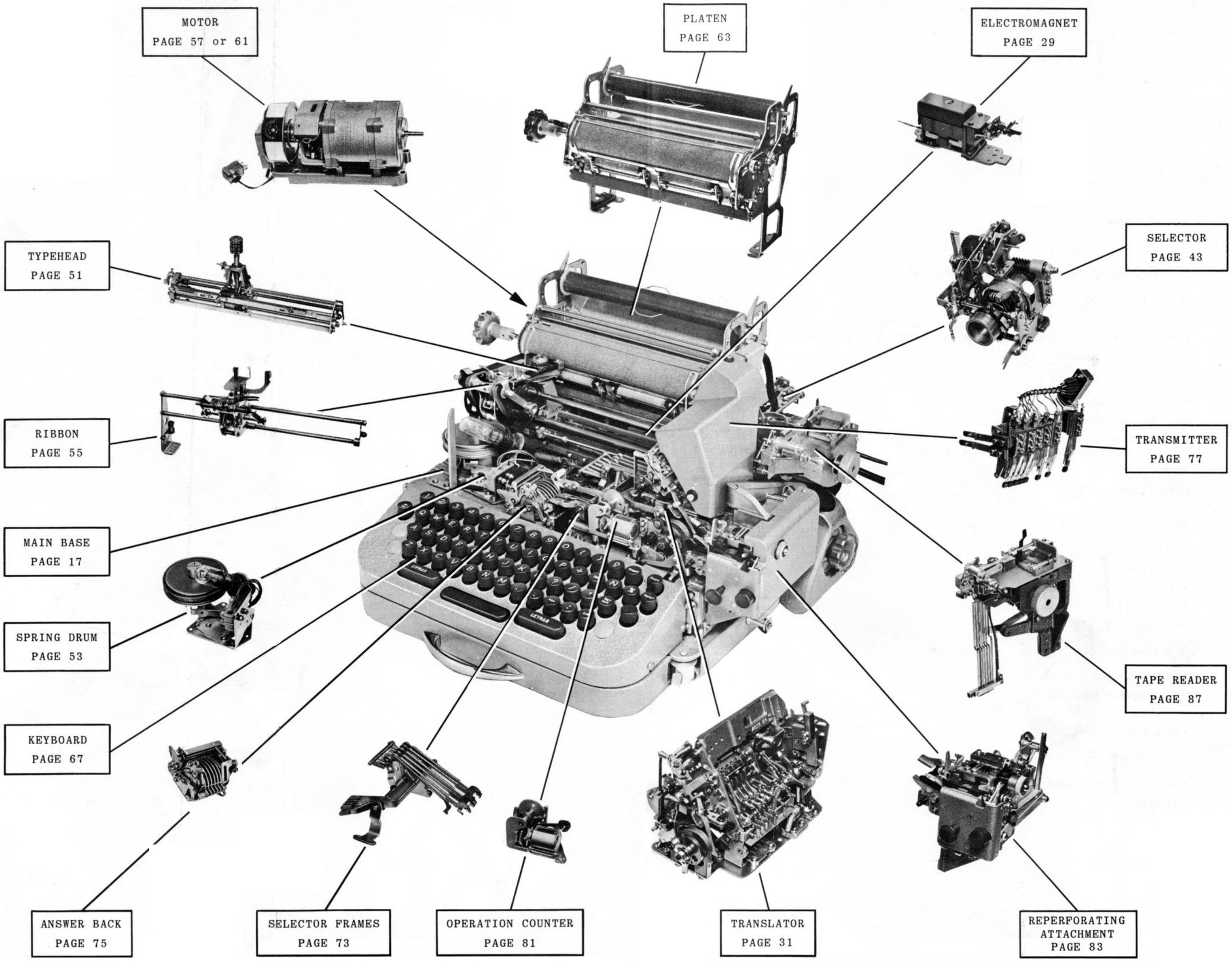
MOTOR
PAGE 57 or 61
PLATEN
PAGE 63
ELECTROMAGNET
PAGE 29
TYPEHEAD
PAGE 51
SELECTOR
PAGE 43
RIBBON
PAGE 55
TRANSMITTER
PAGE 77
MAIN BASE
PAGE 17
TAPE READER
PAGE 87
SPRING DRUM
PAGE 53
KEYBOARD
PAGE 67
ANSWER BACK
PAGE 75
SELECTOR FRAMES
PAGE 73
OPERATION COUNTER
PAGE 81
TRANSLATOR
PAGE 31
REPERFORATING
ATTACHMENT
PAGE 83

1

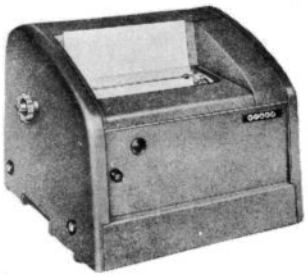

2

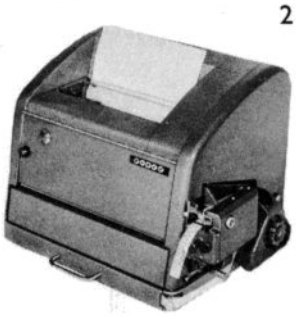

3

4

5

6

7

## VERSIONS OF THE MODEL SEVENTY-FIVE TELEPRINTER COVERED IN THIS PARTS LIST

1 75R Receiver-only Printer

2 75RP/R Receiver-only with Reperforating Attachment

3 75/K Transmitter-Receiver with Keyboard

4 75RP/K Transmitter. Receiver with Keyboard and Reperforating Attachment

5 75RX/T Receiver-Transmitter without Keyboard with Tape Reader

6 75K/T Transmitter-Receiver with Keyboard and Tape Reader

7 75RP/TK Transmitter-Receiver with Keyboard Reperforating Attachment and Tape Reader Attachment

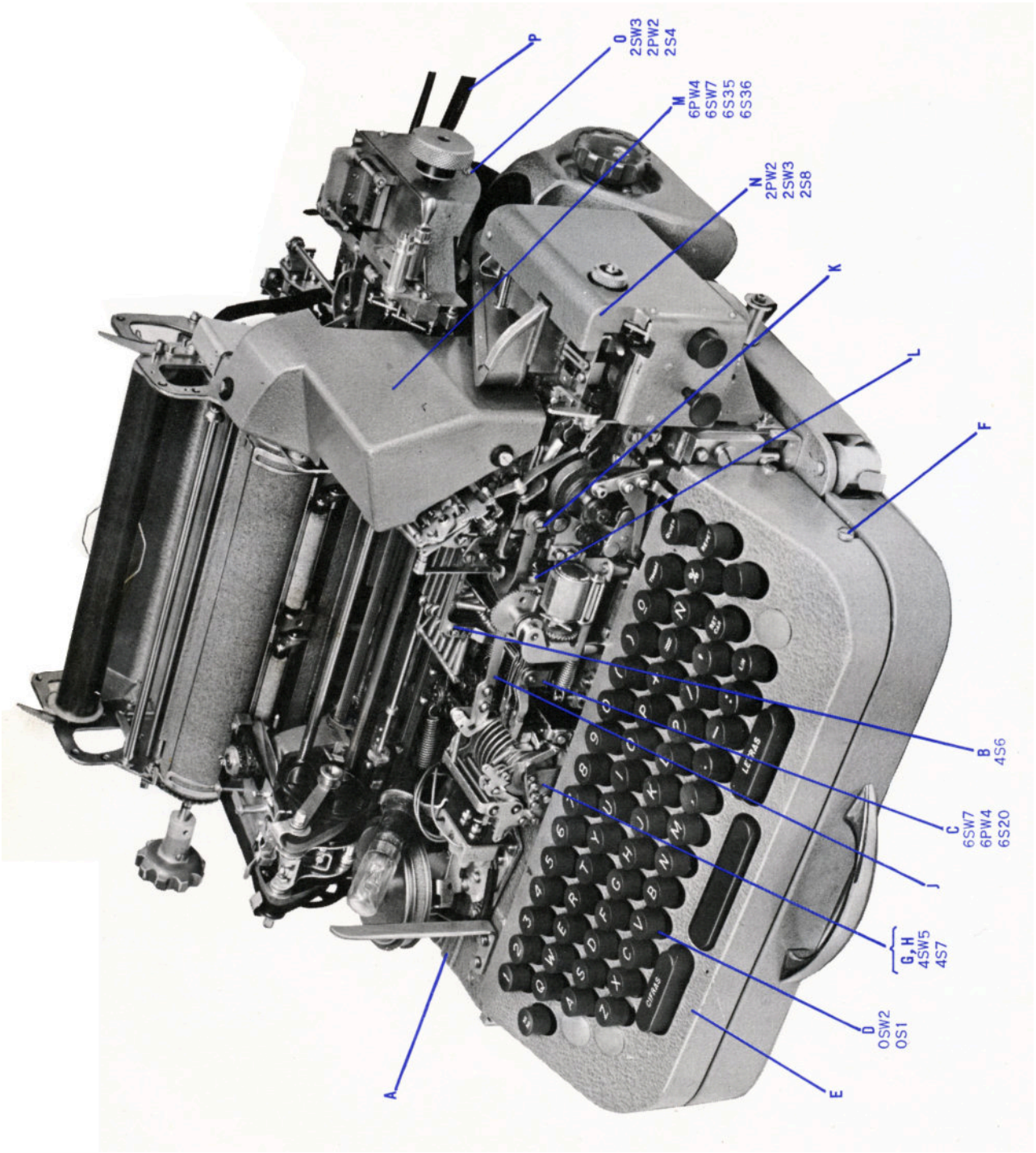


FIG. 7.1 MODEL SEVENTY-FIVE TELEPRINTER

# MODEL SEVENTY-FIVE TELEPRINTER

| Index Letter | Part No. | Part Name | See Page |
|---|---|---|---|
| A | S4294 | MACHINE SUB-ASSEMBLY | 9 |
| B | S4006 | SELECTOR FRAMES UNIT | 73 |
| C | 4000/35 | Selector Frames Front Bearing | |
| D | S4008A | KEYBOARD UNIT | 67 |
| | *or* 4151/244 | DUMMY KEYBOARD CP *(for machines less keyboard and with Tape Reader)* | |
| E | 4000/32 | Keyboard Mask CP *(3-Row)* } *for machines without Tape Reader facility* | |
| | *or* 4000/45 | Keyboard Mask CP *(4-Row Treble Space Pad)* } *for machines without Tape Reader facility* | |
| | *or* 4000/48 | Keyboard Mask CP *(4-Row Single Space Pad)* } *for machines without Tape Reader facility* | |
| | *or* 4151/228 | Keyboard Mask CP *(3-Row)* } *for machines with Tape Reader facility* | |
| | *or* 4151/237 | Keyboard Mask CP *(4-Row Single Space Pad)* } *for machines with Tape Reader facility* | |
| | *or* 4151/240 | Keyboard Mask CP *(4-Row Treble Space Pad)* } *for machines with Tape Reader facility* | |
| F | PS5289 | Special Screw *(4 per set) for securing item D* | |
| G | S4017A | ANSWER BACK UNIT | 75 |
| H | 4017/135 | Shim (0.015 in.) *assembled under item F* | |
| J | 4000/14 | Answer Back Feed Pawl CP *includes:-* | |
| | 4000/18 | Answer Back Ratchet Feed Pawl | |
| | 4000/19 | Answer Back Feed Pawl Stop | |
| K | EC1581 | Eccentric | |
| L | PG7497A | Tension Spring | |
| | 4014/150 | Spring Anchor Plate *(not shown)* | |
| M | S4016C | TRANSMITTER UNIT | 77 |
| N | S4022A | REPERFORATING UNIT | 83 |

| Index Letter | Part No. | Part Name | See Page |
|---|---|---|---|
| O | S4151 | TAPE READER CASTING ASSEMBLY | 87 |
| P | | POWER AND SIGNAL CONNEXION CABLE | 27 |
| | 4000/50A | Guide Rail CP *(for machines with external paper supply)* | |
| | S4098 | COVER UNIT *(for machines fitted with Reperforating Attachment)* } | |
| | *or* S4015 | COVER UNIT *(for machines without Reperforating Attachment)* } | 95 |
| | *or* 4151/249 | COVER UNIT *(for machines fitted with Tape Reader facility)* } | |
| | *or* 4151/210 | COVER UNIT *(for machines fitted with Tape Reader facility and Reperforating Attachment)* } | |
| | PS5674 | Shouldered Screw *(4 per machine without Reperforating Attachment or 3 per machine with Reperforating Attachment)* } *for securing Dust Cover* | |
| | PS5672 | Special Screw *(one per machine with Reperforating Attachment)* } *for securing Dust Cover* | |
| | 4015/29 | Dummy Front *(for machines less keyboard and Tape Reader facility)* | |
| | *or* 4151/243 | Dummy Front *(for machines less keyboard and with Tape Reader facility)* | |
| | PS5399 | Special Screw *(2 per set) for securing Dummy Front* | |
| | 4000/1 | Cover Plate CP *(for machines less Tape Reader facility)* } *S.R.B.F. cover assembled under Base* | |
| | *or* 4151/174 | Cover Plate CP *(for machines with Tape Reader facility)* } *S.R.B.F. cover assembled under Base* | |
| | PS5258 | Special Screw *(5 per machine) for securing Cover Plate* | |

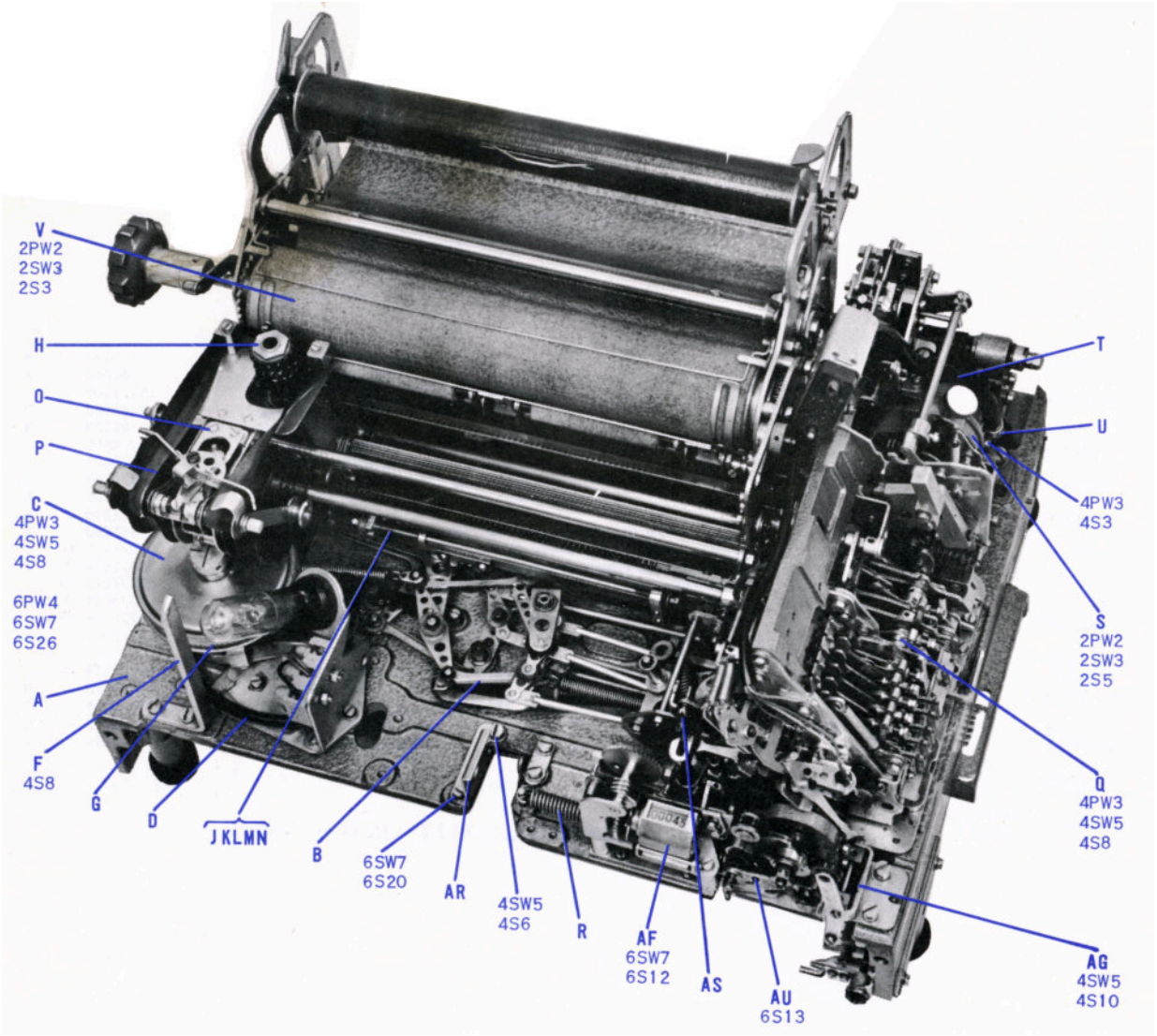


FIG. 7.2 MACHINE SUB-ASSEMBLY S4294 (TOP VIEW)

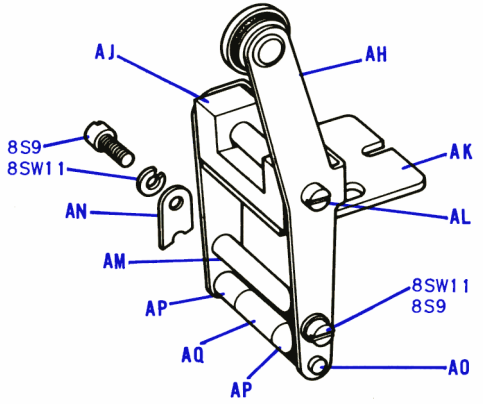


FIG. 7.3 COMBINATION BAR RESET LEVER CP

# MACHINE SUB-ASSEMBLY S4294

| *Index Letter* | *Part No.* | *Part Name* | *See Page* |
|---|---|---|---|
| A | S4275 | MAIN BASE UNIT | 17 |
| | 4000/1 | Cover Plate CP *(S.R.B.F.) fitted under Base, not shown* | |
| | *or* 4151/174 | Cover Plate CP *(S.R.B.F.) fitted under Base, not shown* | |
| | PS5258 | Special Screw *(5 per set) for securing Cover Plate, not shown* | |
| B | 4003/63A | AGGREGATE LEVERS ASSEMBLY | 15 |
| C | S4277 | SPRING DRUM AND END OF LINE INDICATOR | 53 |
| D | CF2259 | Cableform CP | |
| E | PK1159 | Cable Clip | |
| F | 4000/55 | Lamp Guard | |
| G | 4277/18 | Carriage Return Tape CP | |
| H | S4002 | TYPEHEAD CARRIAGE UNIT | 51 |
| | 4014/32A | Typehead Unit Bearing Block Casting CP *(2 per assembly) not shown* | |
| | 2003/277 | Shim (0.005 in.) *3 max, between Item H and 4014/32A* | |
| J | 4002/67 | Carriage Link | |
| K | 4002/68 | Link End Piece | |
| L | PG5159 | Compression Spring | |
| M | PF1128 | Lubricating Washer | |
| N | PW5693 | Special Washer | |
| O | S4001C | RIBBON UNIT | 55 |
| P | BO 2633/1 | Ink Ribbon *(Black) complete with spool* | |
| | *or* BO 2633/2 | Ink Ribbon *(Black & Red) complete with spool, for machines fitted with Two Colour Printing facility* | |
| Q | S4280 | TRANSLATOR UNIT | 31 |
| R | PG7673 | Tension Spring | |
| S | S4278 | SELECTOR UNIT *(Single Speed Model)* | 43 |
| | *or* S4279 | SELECTOR UNIT *(Gear Box Model)* | 43 |
| T | BO 4063A/5 | Cable Clip *(for transmitter/receiver machines)* | |
| | *or* BO 4063A/2 | Cable Clip *(for receiver only machines)* | |
| U | PK1169 | Cable Clip | |
| | S4282 | MOTOR UNIT *(Governed) not shown* | 57 |
| | *or* S4283 | MOTOR UNIT *(Synchronous) not shown* | 61 |
| | PW5716 | Special Washer *(for Governed Motor) not shown* | |
| | *or* PW5881 | Special Washer *(for Synchronous Motor) not shown* | |
| V | S4281 | PLATEN UNIT | 63 |
| | 4014/49A | Letter Feed Arm Bracket CP *includes:-* | |
| W | 4014/48 | Letter Feed Pivot Bracket | |
| X | 4014/45A | Letter Feed Arm Sub CP | |
| Y | PP6841 | Special Parallel Pin | |
| | 4014/54 | Print Spring Link CP *includes:-* | |
| Z | 4014/51 | Print Spring Bellcrank CP | |
| AA | 4014/52 | Print Spring Link | |
| AB | 4014/53 | Special Nut | |
| AC | 4000/9 | Spring Adjustment Link | |
| AD | PS5135 | Special Screw | |
| AE | PG7562 | Tension Spring | |
| AF | S4020B | PERIOD OF OPERATION COUNTER | 81 |

*The following parts are only required when the machine is fitted with a Keyboard and is without a Tape Reader Attachment*

COMBINATION BAR RESET LEVER

| | | | |
|---|---|---|---|
| AG | 4000/15A | Comb Bar Reset Lever CP *includes:-* | |
| AH | 4000/16 | Reset Lever Sub CP | |
| AJ | 4000/24 | Reset Lever Bearing | |
| AK | 4000/25A | Reset Lever Bearing Plate | |
| AL | PP5600 | Threaded Pin | |
| AM | PP6843 | Special Parallel Pin | |
| AN | 4000/26 | Roller Pivot Keeper | |
| AO | PP6842 | Special Parallel Pin | |
| AP | RL1183 | Roller *(short) 2 per CP* | |
| AQ | RL1190 | Roller | |
| AR | 4000/39 | Selector Frames Rack *(used only when Answer Back Unit is not fitted)* | |
| AS | PS5673 | Special Screw | |

*The following parts are only required when the machine is fitted with a Transmitter*

| | | | |
|---|---|---|---|
| AT | 4275/33 | SIGNALS RADIO INTERFERENCE SUPPRESSION UNIT | 79 |

*The following parts are only required when the machine is fitted with a Tape Reader Attachment*

| | | | |
|---|---|---|---|
| AU | 4151/37A | Delay Plate CP *includes:-* | |
| AV | 4151/31A | Base Plate CP | |
| AW | 4151/34A | Roller Lever CP | |
| AX | PW5694 | Washer | |
| AY | PG3324 | Special Spring | |
| AZ | 4151/39 | Disable Lever CP | |
| BA | PW5682 | Shim | |
| BB | PF1201 | Lubricating Washer | |
| BC | 4151/222 | Code Frames Assembly | 13 |

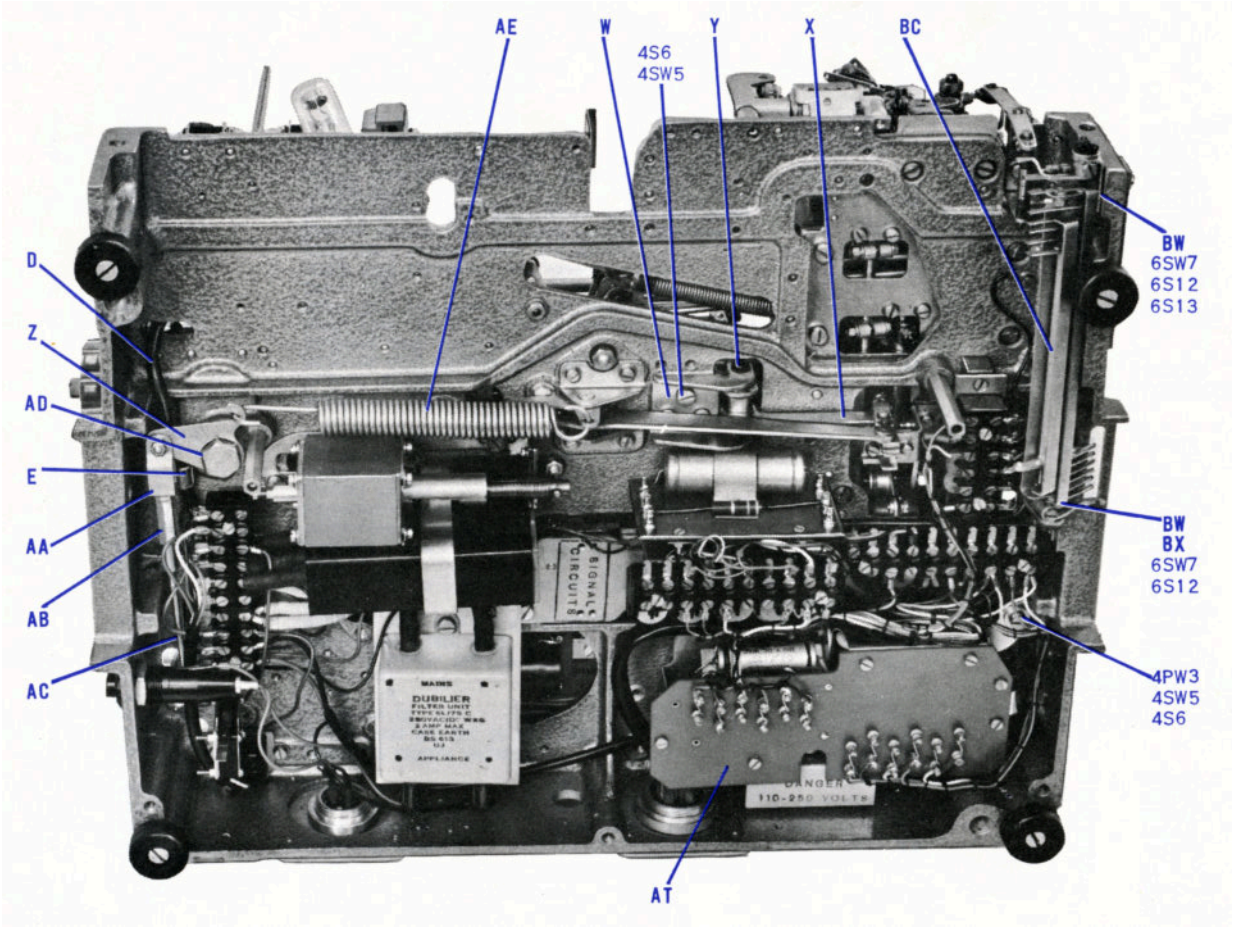


FIG. 7.4 MACHINE SUB-ASSEMBLY S4294 (UNDERSIDE VIEW)

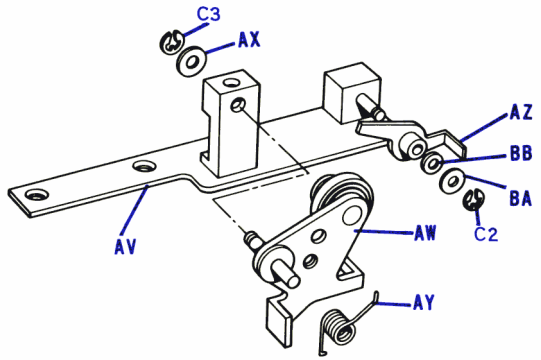


FIG. 7.5 DELAY PLATE CP 4151/37

# MACHINE SUB-ASSEMBLY S4294

| Index Letter | Part No. | Part Name | See Page |
|---|---|---|---|
| A | S4275 | MAIN BASE UNIT | 17 |
| | 4000/1 | Cover Plate CP *(S.R.B.F.) fitted under Base, not shown* | |
| | *or* 4151/174 | Cover Plate CP *(S.R.B.F.) fitted under Base, not shown* | |
| | PS5258 | Special Screw *(5 per set) for securing Cover Plate, not shown* | |
| B | 4003/63A | AGGREGATE LEVERS ASSEMBLY | 15 |
| C | S4277 | SPRING DRUM AND END OF LINE INDICATOR | 53 |
| D | CF2259 | Cableform CP | |
| E | PK1159 | Cable Clip | |
| F | 4000/55 | Lamp Guard | |
| G | 4277/18 | Carriage Return Tape CP | |
| H | S4002 | TYPEHEAD CARRIAGE UNIT | 51 |
| | 4014/32A | Typehead Unit Bearing Block Casting CP *(2 per assembly) not shown* | |
| | 2003/277 | Shim (0.005 in.) *3 max, between Item H and 4014/32A* | |
| J | 4002/67 | Carriage Link | |
| K | 4002/68 | Link End Piece | |
| L | PG5159 | Compression Spring | |
| M | PF1128 | Lubricating Washer | |
| N | PW5693 | Special Washer | |
| O | S4001C | RIBBON UNIT | 55 |
| P | BO 2633/1 | Ink Ribbon *(Black) complete with spool* | |
| | *or* BO 2633/2 | Ink Ribbon *(Black & Red) complete with spool, for machines fitted with Two Colour Printing facility* | |
| Q | S4280 | TRANSLATOR UNIT | 31 |
| R | PG7673 | Tension Spring | |
| S | S4278 | SELECTOR UNIT *(Single Speed Model)* | 43 |
| | *or* S4279 | SELECTOR UNIT *(Gear Box Model)* | 43 |
| T | BO 4063A/5 | Cable Clip *(for transmitter/receiver machines)* | |
| | *or* BO 4063A/2 | Cable Clip *(for receiver only machines)* | |
| U | PK1169 | Cable Clip | |
| | S4282 | MOTOR UNIT *(Governed) not shown* | 57 |
| | *or* S4283 | MOTOR UNIT *(Synchronous) not shown* | 61 |
| | PW5716 | Special Washer *(for Governed Motor) not shown* | |
| | *or* PW5881 | Special Washer *(for Synchronous Motor) not shown* | |
| V | S4281 | PLATEN UNIT | 63 |
| | 4014/49A | Letter Feed Arm Bracket CP *includes:-* | |
| W | 4014/48 | Letter Feed Pivot Bracket | |
| X | 4014/45A | Letter Feed Arm Sub CP | |
| Y | PP6841 | Special Parallel Pin | |
| | 4014/54 | Print Spring Link CP *includes:-* | |
| Z | 4014/51 | Print Spring Bellcrank CP | |
| AA | 4014/52 | Print Spring Link | |
| AB | 4014/53 | Special Nut | |
| AC | 4000/9 | Spring Adjustment Link | |
| AD | PS5135 | Special Screw | |
| AE | PG7562 | Tension Spring | |
| AF | S4020B | PERIOD OF OPERATION COUNTER | 81 |

*The following parts are only required when the machine is fitted with a Keyboard and is without a Tape Reader Attachment*

COMBINATION BAR RESET LEVER

| | | | |
|---|---|---|---|
| AG | 4000/15A | Comb Bar Reset Lever CP *includes:-* | |
| AH | 4000/16 | Reset Lever Sub CP | |
| AJ | 4000/24 | Reset Lever Bearing | |
| AK | 4000/25A | Reset Lever Bearing Plate | |
| AL | PP5600 | Threaded Pin | |
| AM | PP6843 | Special Parallel Pin | |
| AN | 4000/26 | Roller Pivot Keeper | |
| AO | PP6842 | Special Parallel Pin | |
| AP | RL1183 | Roller *(short) 2 per CP* | |
| AQ | RL1190 | Roller | |
| AR | 4000/39 | Selector Frames Rack *(used only when Answer Back Unit is not fitted)* | |
| AS | PS5673 | Special Screw | |

*The following parts are only required when the machine is fitted with a Transmitter*

| | | | |
|---|---|---|---|
| AT | 4275/33 | SIGNALS RADIO INTERFERENCE SUPPRESSION UNIT | 79 |

*The following parts are only required when the machine is fitted with a Tape Reader Attachment*

| | | | |
|---|---|---|---|
| AU | 4151/37A | Delay Plate CP *includes:-* | |
| AV | 4151/31A | Base Plate CP | |
| AW | 4151/34A | Roller Lever CP | |
| AX | PW5694 | Washer | |
| AY | PG3324 | Special Spring | |
| AZ | 4151/39 | Disable Lever CP | |
| BA | PW5682 | Shim | |
| BB | PF1201 | Lubricating Washer | |
| BC | 4151/222 | Code Frames Assembly | 13 |

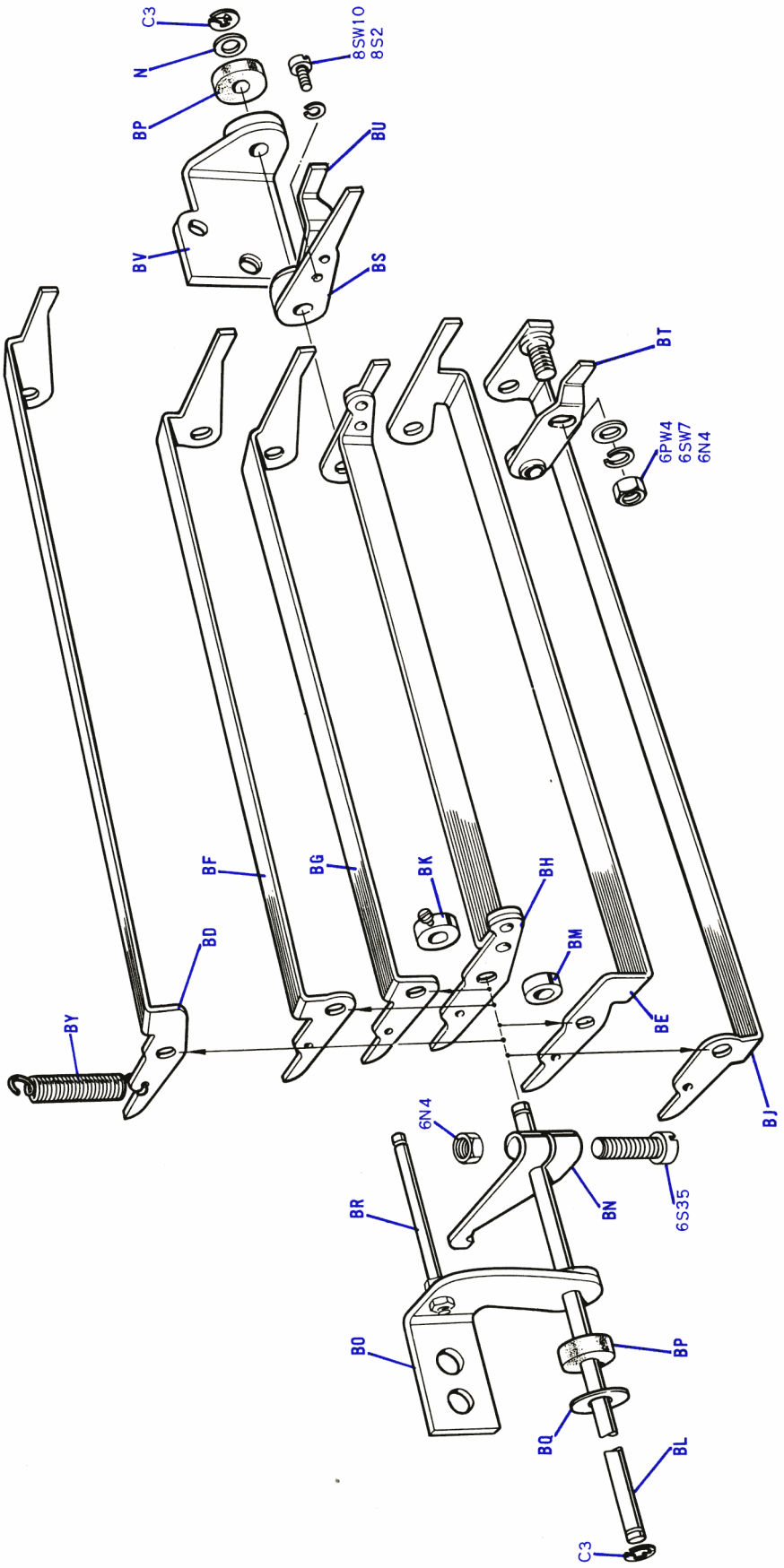


FIG. 7.6 CODE FRAMES ASSEMBLY 4151/222

## MACHINE SUB-ASSEMBLY S4294 (Continued)

| *Index Letter* | *Part No.* | *Part Name* |
|---|---|---|
| | 4151/222 | Code Frames Assembly *includes:-* |
| BD | 4151/132 | No.1 Code Frame |
| BE | 4151/133 | No.2 Code Frame |
| BF | 4151/134 | No.3 Code Frame |
| BG | 4151/135 | No.4 Code Frame |
| BH | 4151/139 | No.5 Code Frame |
| BJ | 4151/291 | Taut Tape Frame CP |
| BK | CS1016 | Set Collar and Screw |
| BL | 4151/146 | Spindle |
| BM | PW5861 | Spacer |
| BN | 4151/129 | Manual Trip Lever CP |
| BO | 4151/143 | Bearing Bracket (LH) CP |
| BP | PF1115 | Lubricating Washer *(2 per assembly)* |
| BQ | PW5508 | Shim (0.005 in.) *2 per assembly* |
| BR | PP5664 | Spring Anchor |
| BS | 4151/131 | Manual Trip Interposer CP |
| BT | 4151/292 | Taut Tape Interposer CP |
| BU | 4151/170 | Trip Arm |
| BV | 4151/145 | Bearing Bracket (RH) CP |
| BW | 4151/147 | Shim *(as required) see Fig.4* |
| BX | 4151/141 | Washer Plate *(see Fig.4)* |
| BY | PG7636 | Tension Spring *(6 per assembly)* |

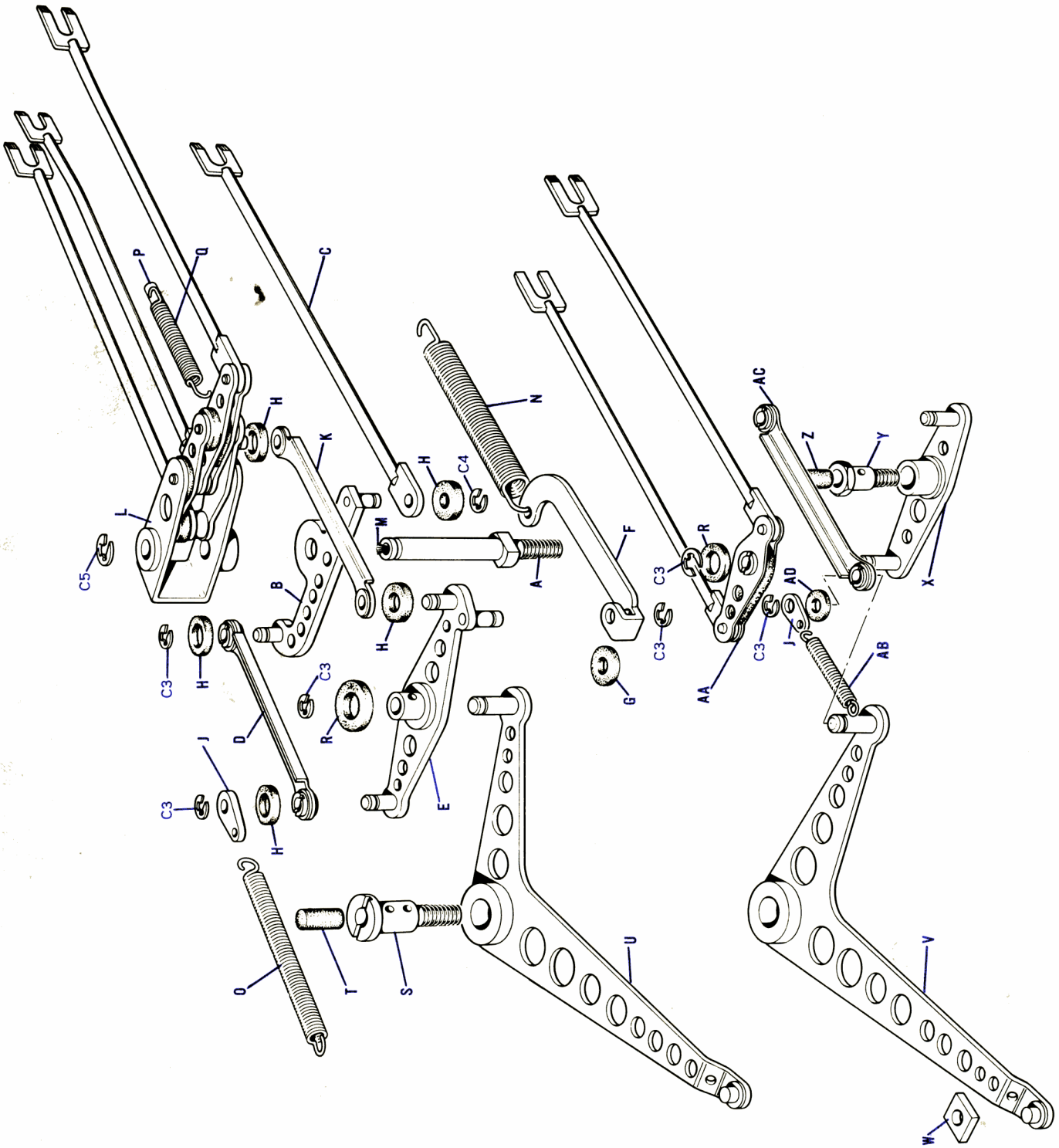


FIG. 7.7 AGGREGATE LEVERS ASSEMBLY

# AGGREGATE LEVERS ASSEMBLY

| *Index Letter* | *Part No.* | *Part Name* |
|---|---|---|
| | 4003/63A | Aggregate Lever Assembly *includes:-* |
| A | 4003/25 | Main Lever Pivot |
| | 4003/49A | Lower Lever and Push Rod CP *includes:-* |
| B | 4003/48 | Lower Lever CP |
| C | 4003/33A | Push Rod CP *(No. 3)* |
| D | 4003/57 | Long Rear Link CP *(same as item AC)* |
| | 4003/51A | Aggregate Lever CP *includes:-* |
| E | 4003/50 | Aggregate Lever Sub CP |
| F | 4003/5A | Anchor Plate |
| G | PF1116 | Lubricating Washer *(felt) 2 per CP* |
| H | PF1115 | Lubricating Washer *(4 per unit) same as item AD* |
| J | 4003/28 | Anchor Plate |
| K | 4003/56 | Long Front Link CP |
| L | 4003/46A | Main Lever Assembly |
| M | 4003/62 | Lubricating Wick |
| N | PG7496 | Tension Spring *(identity colour green)* |
| O | PG7541 | Tension Spring *(identity colour orange)* |
| | 4000/239 | Tension Spring CP *includes:-* |
| P | PF1206 | Spring Damper |
| Q | PG7493A | Tension Spring *(identity colours green and blue)* |
| R | PF1114 | Lubricating Washer |
| S | 4003/27 | Bellcrank Pivot |
| T | PF1107 | Lubricating Felt |
| U | 4003/54A | Rotation Bellcrank CP } *includes:-* |
| V | 4003/53A | Lift Bellcrank CP } |
| W | 4003/30A | Trunnion Block |
| X | 4003/52A | Typehead Lift Lever CP |
| Y | 4003/26 | Lift Lever Pivot |
| Z | PF1108 | Lubricating Felt |
| AA | 4003/39A | Lift Link CP |
| AB | PG7542A | Tension Spring |
| AC | 4003/57 | Long Link CP *(same as item D)* |
| AD | PF1115 | Lubricating Washer *(2 per assembly) same as item H* |

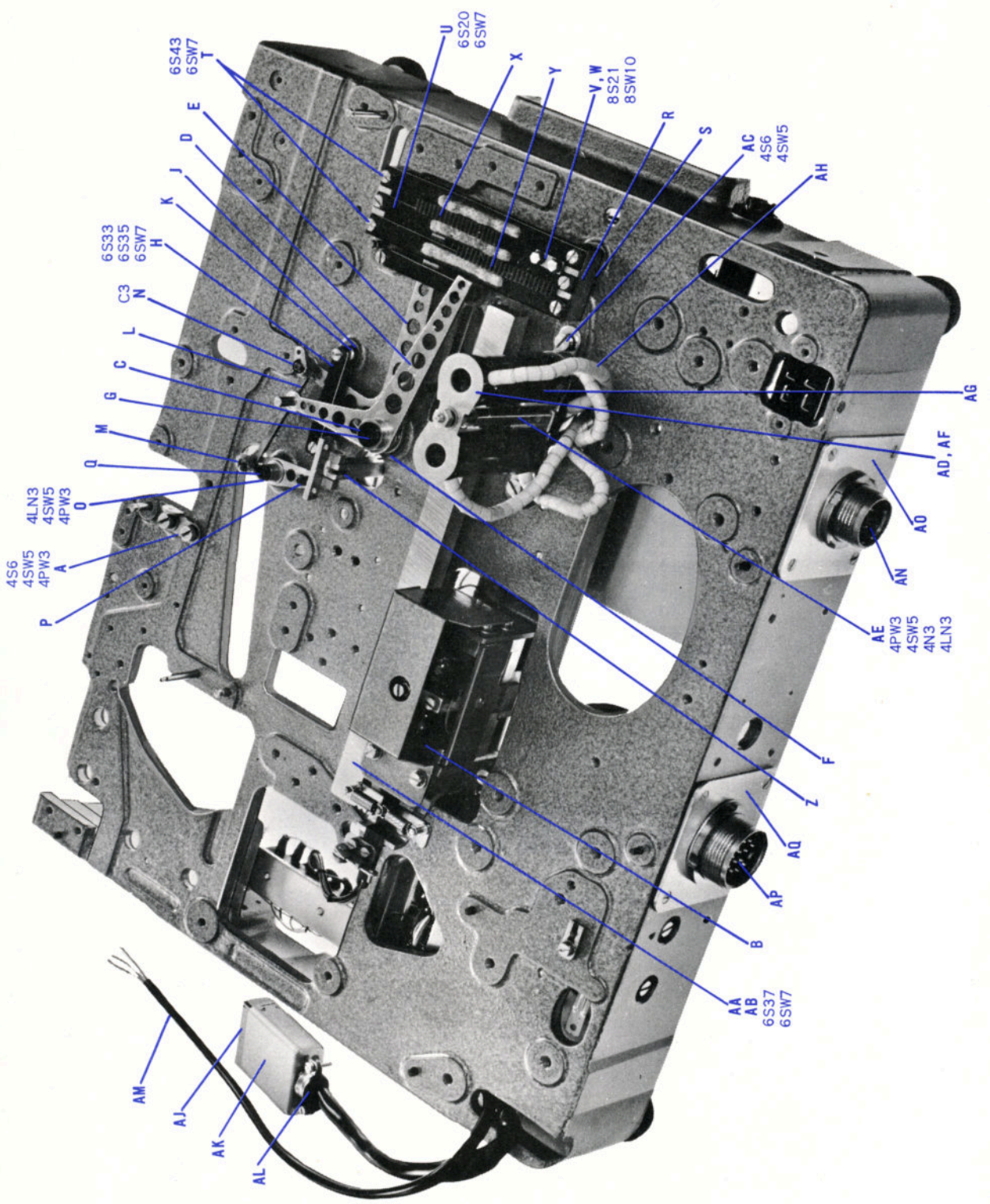


FIG. 7.8 MAIN BASE UNIT S4275 GROUP I—GOVERNED MOTOR (TOP VIEW)

## MAIN BASE UNIT S4275 { GROUP 1 Governed Motor / GROUP 2 Synchronous Motor

| Index Letter | Part No. | Part Name |
|---|---|---|
| A | 4014/150 | Spring Anchor Plate |
| ELECTROMAGNET UNIT | | |
| B | S4284 | ELECTROMAGNET UNIT |
| TYPEHEAD ROTATION AND LIFT MECHANISM | | |
| C | 4003/27 | Bellcrank Pivot |
| D | 4003/54A | Rotation Bellcrank CP } *includes:-* |
| E | 4003/53A | Lift Bellcrank CP } *includes:-* |
| | 4003/30A | Trunnion Block *(not shown) see item W Fig.7* |
| F | PW5675 | Special Washer |
| G | PF1107 | Lubrication Plug |
| H | 4003/16 | Upper Guide Strip } *2 per unit* |
| J | 4003/17 | Lower Guide Strip } *2 per unit* |
| K | PB4403 | Spacing Collar *(4 per unit)* |
| L | 4003/57 | Long Link CP |
| M | PF1115 | Lubricating Washer *(2 per unit)* |
| N | 4003/28 | Anchor Plate |
| O | 4003/26 | Lift Lever Pivot |
| P | 4003/52A | Lift Lever CP |
| Q | PF1108 | Lubricating Felt |
| R | 4003/13 | Rack Support Block *(2 per unit)* |
| S | 4014/203 | Shim *(as required)* |
| T | 4003/59 | Wide Rack Guide CP *(2 per unit)* |
| U | 4003/58 | Narrow Rack Guide CP |
| V | 4003/67A | Stop Block |
| W | 4003/66 | Top Clamp Plate |
| X | 4003/11 | Typehead Lift Rack |
| Y | 4003/10 | Typehead Rotation Rack |

*See Page 29*

| Index Letter | Part No. | Part Name |
|---|---|---|
| PRINT FUNCTION (BASE MECHANISM) | | |
| Z | 4014/38 | Print Rail Coupling CP |
| AA | 4014/41 | Corrector Track Rail |
| AB | PP5597 | Threaded Pin *(2 per unit)* |
| GOVERNOR RESISTOR UNIT *(for Governed Motors only)* | | |
| | 4014/12 | Governing Resistor Unit CP *includes:-* |
| AC | 4014/11 | Resistor Base Plate |
| AD | 4014/10 | Resistor Clip *(2 per CP)* |
| AE | PP5598 | Threaded Pin |
| AF | PW5746 | Special Washer *(2 per CP)* |
| | 4014/9 | Resistor CP *includes:-* |
| AG | BO 3815/7 | Resistor 620 ohm, ± 5% 15W |
| AH | BO 1701 | Insulating Bead *(60 per CP)* |
| TRANSMITTER UNIT TERMINAL STRIP | | |
| | 4275/21 | Transmitter Cableform CP *includes:-* |
| AJ | BO 7733/2 | 18-way Socket *(McMurdo MS118)* |
| AK | BO 7733/7 | Socket Cover *(McMurdo MC118A)* |
| AL | BO 7800/4 | Grommet |
| AM | 4016/114 | Bell and WRU? Cable CP |
| *or* | 4016/115 | Bell Cable CP |
| *or* | 4016/116 | WRU? Cable CP |
| BASE CONNECTORS | | |
| | 4275/26 | 3-way Plug and Plate CP *(Governed Motor) includes:-* |
| AN | BO 3816/1 | 3-way Plug *(Plessey Z560060)* |
| AO | 4275/27 | Fixing Plate *(3-way plug)* |
| *or* | 4275/28 | 3-way Plug and Plate CP *(Synchronous Motor) includes:-* |
| | BO 3816/1 | 3-way Plug *(Plessey Z560060) same as item AN* |
| | 4275/27 | Fixing Plate *(3-way plug) same as item AO* |
| | 4275/15 | 12-way Plug CP *includes:-* |
| AP | BO 3811/1 | 12-way Plug *(Plessey Z560150)* |
| AQ | 4275/14 | Fixing Plate |

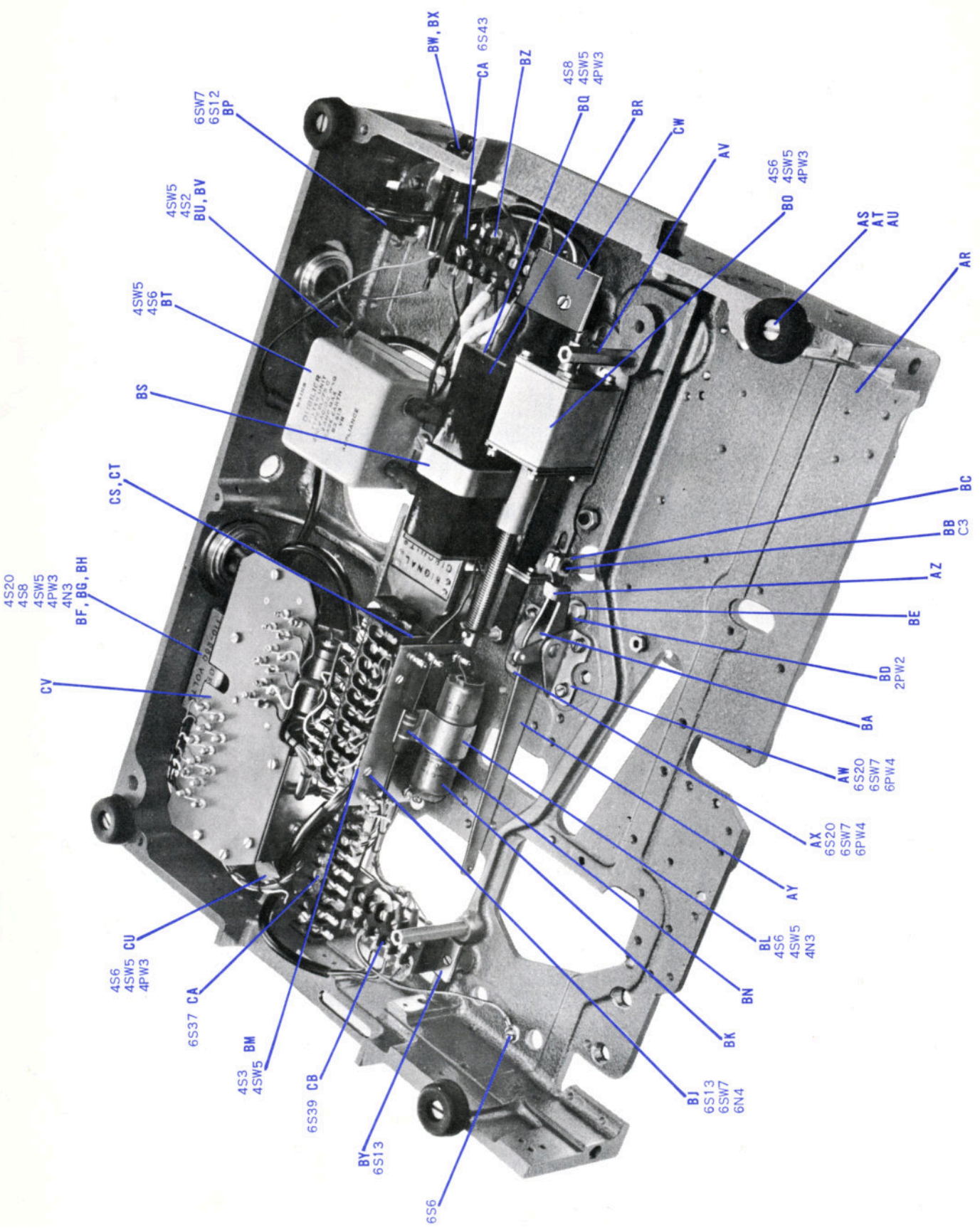


FIG. 7.9 MAIN BASE UNIT S4275 GROUP I—GOVERNED MOTOR (UNDERSIDE VIEW)

# MAIN BASE UNIT S4275 (Continued)

| *Index Letter* | *Part No.* | *Part Name* |
|---|---|---|
| CASTING, FEET AND BASE PLATE SUPPORTS | | |
| AR | 4275/23 | Base Casting and Pins CP *(comprises machined and enamelled casting with pins driven in)* |
| AS | RB1020 | Rubber Foot } |
| AT | PS7238 | Special Screw } *4 off each per unit* |
| AU | PW5719 | Special Washer } |
| AV | 4014/68 | Support Pillar *(2 per unit)* |
| PRINT FUNCTION (BASE MECHANISM) | | |
| AW | 4014/31 | Support Bracket |
| AX | 4014/30 | Pivot Bracket CP |
| AY | 4014/40 | Print Beam CP |
| AZ | 4014/35 | Beam Actuating Lever CP |
| BA | PF1155 | Lubricating Washer *(2 per unit)* |
| BB | PP6840 | Parallel Pin |
| BC | PF1116 | Lubricating Washer *(2 per unit)* |
| BD | PS5134 | Special Screw |
| BE | PW5681 | Shim Washer *(0.003 in.) 7 per unit max.* |
| STARTER SWITCH | | |
| BF | 4014/5 | Starter Switch Bracket |
| BG | 4014/6 | Starter Switch and Cableform |
| BH | 4014/137 | Starter Switchguard CP |
| ELECTROMAGNET SPARK QUENCH | | |
| | 4275/10 | Electromagnet Spark Quench CP *includes:-* |
| BJ | 4275/9 | Tagboard CP |
| BK | BO 5201/11 | Capacitor 0.5 $\mu$f, 400V |
| BL | PK2063 | Clamp |
| BM | 4014/134 | Bracket *(2 per CP)* |
| BN | BO 2636/1 | Resistor 330 ohm, ± 10% ½W |
| BO | 4014/67D | Dashpot CP *(see page 25)* |
| MOTOR CONNEXIONS AND BASE COMPONENTS *(GOVERNED MOTORS ONLY)* | | |
| | 4275/24 | Motor Connexion Socket CP *includes:-* |
| BP | BO 7601/3 | 4-way Socket *(Painton S4/MFS) same as item CC* |
| | 4014/184 | Capacitor CP *includes:-* |
| BQ | BO 4148 | Capacitor 1.0 + 1.0 $\mu$f, + 40% - 10% 325V |
| BR | PE5127 | Insulating Strip |
| BS | PK2036 | Capacitor Strap |
| | 4275/25 | Filter Unit CP *includes:-* |
| BT | BO 5587/1 | Suppressor *(Dubilier 6L/75C)* |

| *Index Letter* | *Part No.* | *Part Name* |
|---|---|---|
| BU | 4275/18 | Filter Unit Base Plate |
| BV | 4275/17 | Pillar *(2 per unit)* |
| BW | BO 2932A | Fuse Carrier *(Belling L1348) same as item CM* |
| BX | BO 4046/3 | Fuse, 1.5 amp *(for 100/125 volts)* |
| *or* | BO 4046/4 | Fuse, 1.0 amp *(for 200/210 volts) same as item CN* |
| *or* | BO 4046/2 | Fuse, 0.7 amp *(for 220/230 volts)* |
| BY | 4275/11 | Connexion Plate *(same as item CO)* |
| BZ | CT5133 | Connexion Tag *(as required) same as item CP* |
| CA | CB1152 | Terminal Strip *(10-way) 2 per unit (same as item CQ)* |
| CB | CB1151 | Terminal Strip *(6-way) same as item CR* |
| MOTOR CONNEXIONS AND BASE COMPONENTS *(SYNCHRONOUS MOTORS ONLY)* | | |
| | 4275/24 | Motor Connexion Socket CP *includes:-* |
| CC | BO 7601/3 | 4-way Socket *(Painton S4/MFS) same as item BP* |
| | 4275/30 | Motor Capacitor CP *includes:-* |
| CD | BO 4092/6 | Capacitor 2.0 $\mu$f, **440V** *(230/250V)* } |
| *or* | BO 4092/7 | Capacitor 2.5 $\mu$f, **440V** *(200/220V)* } *as required by motor voltage* |
| *or* | BO 4092/5 | Capacitor 7.75 $\mu$f, **250V** *(115/125V)* } |
| CE | 4275/32 | Capacitor Strap |
| CF | 4014/199 | Support Block |
| CG | PK1203 | Capacitor Clip |
| | 4275/29 | Electrolytic Capacitor CP *includes:-* |
| CH | BO 4122/1 | Capacitor 64 $\mu$f, 150V *(for 100/125 Volt motors)* |
| *or* | BO 4122/3 | Capacitor 15 $\mu$f, 350V *(for 200/250 Volt motors)* |
| CJ | PB4764 | Bush *(for 100/125 Volt working)* |
| CK | PK1120 | Capacitor Clip *(for 100/125 Volt working)* |
| *or* | 4275/5 | Capacitor Clip *(for 200/250 Volt working)* |
| | 4014/399 | Resistor CP *includes:-* |
| CL | BO 3549/8 | Resistor 3.3k, ± 5% 3W |
| CM | BO 2932A | Fuse Carrier *(Belling L1348) same as item BW* |
| CN | BO 4046/5 | Fuse, 2.5 amp *(for 110/125 Volts)* |
| *or* | BO 4046/4 | Fuse, 1.0 amp *(for 220/250 Volts) same as item BX* |
| CO | 4275/11 | Connexion Plate *(same as item BY)* |
| CP | CT5133 | Connexion Tag *(same as item BZ)* |
| CQ | CB1152 | Terminal Strip *(10-way) 2 per unit (same as item CA)* |
| CR | CB1151 | Terminal Strip *(6-way) same as item CB* |
| TRANSMITTER UNIT TERMINAL STRIP | | |
| | CB1152 | Terminal Strip *(10-way) 2 per unit (same as item CA)* |
| CS | 4014/163 | Connexion Block Bracket |
| CT | PW5308 | Special Washer |
| CU | 4275/49 | Cable Cleat |
| *or* | BO 4063A/5 | Cable Clip *(for receiver only machines)* |
| CV | 4275/33 | Signals R.I.S. Unit |
| CW | 4176/44 | Cover Plate |

*See Page 79*

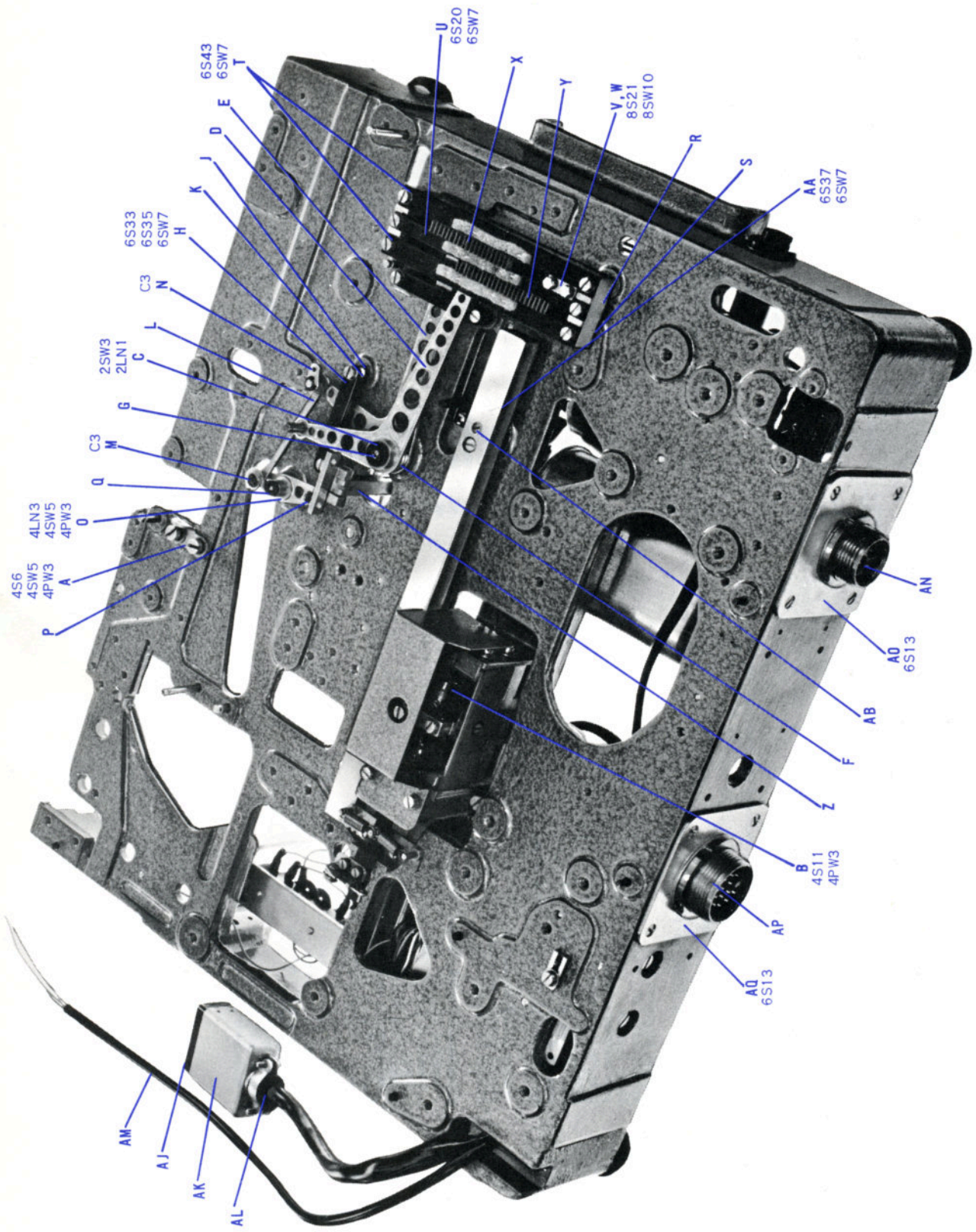


FIG. 7.10 MAIN BASE UNIT S4275 GROUP 2—SYNCHRONOUS MOTOR (TOP VIEW)

## MAIN BASE UNIT S4275 { GROUP 1 *Governed Motor* / GROUP 2 *Synchronous Motor*

| *Index Letter* | *Part No.* | *Part Name* |
|---|---|---|
| A | 4014/150 | Spring Anchor Plate |
| ELECTROMAGNET UNIT | | |
| B | S4284 | ELECTROMAGNET UNIT |
| TYPEHEAD ROTATION AND LIFT MECHANISM | | |
| C | 4003/27 | Bellcrank Pivot |
| D | 4003/54A | Rotation Bellcrank CP } *includes:-* |
| E | 4003/53A | Lift Bellcrank CP } *includes:-* |
| | 4003/30A | Trunnion Block *(not shown) see item W Fig.7* |
| F | PW5675 | Special Washer |
| G | PF1107 | Lubrication Plug |
| H | 4003/16 | Upper Guide Strip } *2 per unit* |
| J | 4003/17 | Lower Guide Strip } *2 per unit* |
| K | PB4403 | Spacing Collar *(4 per unit)* |
| L | 4003/57 | Long Link CP |
| M | PF1115 | Lubricating Washer *(2 per unit)* |
| N | 4003/28 | Anchor Plate |
| O | 4003/26 | Lift Lever Pivot |
| P | 4003/52A | Lift Lever CP |
| Q | PF1108 | Lubricating Felt |
| R | 4003/13 | Rack Support Block *(2 per unit)* |
| S | 4014/203 | Shim *(as required)* |
| T | 4003/59 | Wide Rack Guide CP *(2 per unit)* |
| U | 4003/58 | Narrow Rack Guide CP |
| V | 4003/67A | Stop Block |
| W | 4003/66 | Top Clamp Plate |
| X | 4003/11 | Typehead Lift Rack |
| Y | 4003/10 | Typehead Rotation Rack |

*See Page 29*

| *Index Letter* | *Part No.* | *Part Name* |
|---|---|---|
| PRINT FUNCTION (BASE MECHANISM) | | |
| Z | 4014/38 | Print Rail Coupling CP |
| AA | 4014/41 | Corrector Track Rail |
| AB | PP5597 | Threaded Pin *(2 per unit)* |
| GOVERNOR RESISTOR UNIT *(for Governed Motors only)* | | |
| | 4014/12 | Governing Resistor Unit CP *includes:-* |
| AC | 4014/11 | Resistor Base Plate |
| AD | 4014/10 | Resistor Clip *(2 per CP)* |
| AE | PP5598 | Threaded Pin |
| AF | PW5746 | Special Washer *(2 per CP)* |
| | 4014/9 | Resistor CP *includes:-* |
| AG | BO 3815/7 | Resistor 620 ohm, ± 5% 15W |
| AH | BO 1701 | Insulating Bead *(60 per CP)* |
| TRANSMITTER UNIT TERMINAL STRIP | | |
| | 4275/21 | Transmitter Cableform CP *includes:-* |
| AJ | BO 7733/2 | 18-way Socket *(McMurdo MS118)* |
| AK | BO 7733/7 | Socket Cover *(McMurdo MC118A)* |
| AL | BO 7800/4 | Grommet |
| AM | 4016/114 | Bell and WRU? Cable CP |
| | *or* 4016/115 | Bell Cable CP |
| | *or* 4016/116 | WRU? Cable CP |
| BASE CONNECTORS | | |
| | 4275/26 | 3-way Plug and Plate CP *(Governed Motor) includes:-* |
| AN | BO 3816/1 | 3-way Plug *(Plessey Z560060)* |
| AO | 4275/27 | Fixing Plate *(3-way plug)* |
| | *or* 4275/28 | 3-way Plug and Plate CP *(Synchronous Motor) includes:-* |
| | BO 3816/1 | 3-way Plug *(Plessey Z560060) same as item AN* |
| | 4275/27 | Fixing Plate *(3-way plug) same as item AO* |
| | 4275/15 | 12-way Plug CP *includes:-* |
| AP | BO 3811/1 | 12-way Plug *(Plessey Z560150)* |
| AQ | 4275/14 | Fixing Plate |

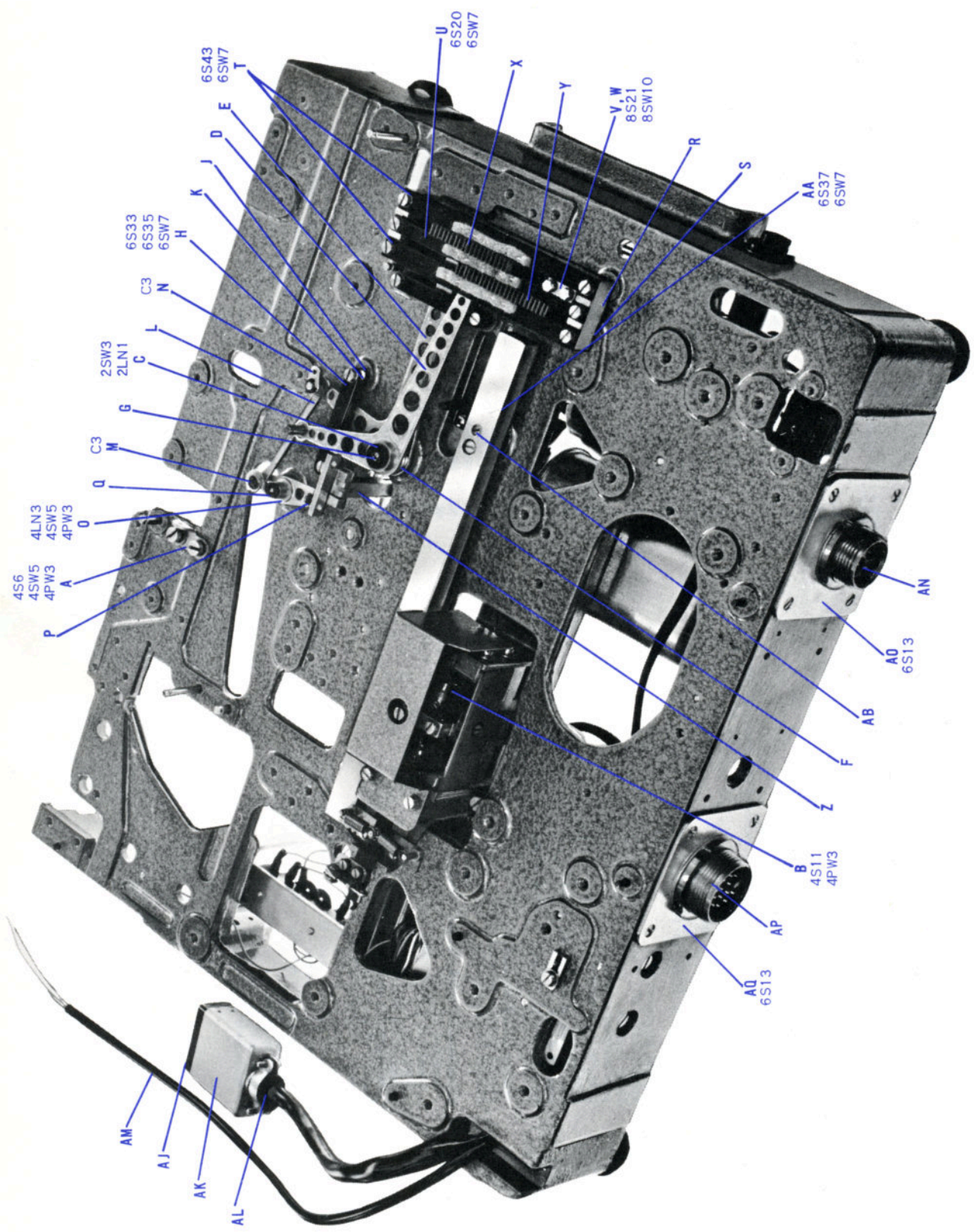


FIG. 7.11 MAIN BASE UNIT S4275 GROUP 2—SYNCHRONOUS MOTOR (UNDERSIDE VIEW)

## MAIN BASE UNIT S4275 (Continued)

| Index Letter | Part No. | Part Name |
|---|---|---|
| CASTING, FEET AND BASE PLATE SUPPORTS | | |
| AR | 4275/23 | Base Casting and Pins CP *(comprises machined and enamelled casting with pins driven in)* |
| AS | RB1020 | Rubber Foot } |
| AT | PS7238 | Special Screw } *4 off each per unit* |
| AU | PW5719 | Special Washer } |
| AV | 4014/68 | Support Pillar *(2 per unit)* |
| PRINT FUNCTION (BASE MECHANISM) | | |
| AW | 4014/31 | Support Bracket |
| AX | 4014/30 | Pivot Bracket CP |
| AY | 4014/40 | Print Beam CP |
| AZ | 4014/35 | Beam Actuating Lever CP |
| BA | PF1155 | Lubricating Washer *(2 per unit)* |
| BB | PP6840 | Parallel Pin |
| BC | PF1116 | Lubricating Washer *(2 per unit)* |
| BD | PS5134 | Special Screw |
| BE | PW5681 | Shim Washer *(0.003 in.) 7 per unit max.* |
| STARTER SWITCH | | |
| BF | 4014/5 | Starter Switch Bracket |
| BG | 4014/6 | Starter Switch and Cableform |
| BH | 4014/137 | Starter Switchguard CP |
| ELECTROMAGNET SPARK QUENCH | | |
| | 4275/10 | Electromagnet Spark Quench CP *includes:-* |
| BJ | 4275/9 | Tagboard CP |
| BK | BO 5201/11 | Capacitor 0.5 $\mu$f, 400V |
| BL | PK2063 | Clamp |
| BM | 4014/134 | Bracket *(2 per CP)* |
| BN | BO 2636/1 | Resistor 330 ohm, ± 10% ½W |
| BO | 4014/67D | Dashpot CP *(see page 25)* |
| MOTOR CONNEXIONS AND BASE COMPONENTS *(GOVERNED MOTORS ONLY)* | | |
| | 4275/24 | Motor Connexion Socket CP *includes:-* |
| BP | BO 7601/3 | 4-way Socket *(Painton S4/MFS) same as item CC* |
| | 4014/184 | Capacitor CP *includes:-* |
| BQ | BO 4148 | Capacitor 1.0 + 1.0 $\mu$f, + 40% − 10% 325V |
| BR | PE5127 | Insulating Strip |
| BS | PK2036 | Capacitor Strap |
| | 4275/25 | Filter Unit CP *includes:-* |
| BT | BO 5587/1 | Suppressor *(Dubilier 6L/75C)* |
| BU | 4275/18 | Filter Unit Base Plate |
| BV | 4275/17 | Pillar *(2 per unit)* |
| BW | BO 2932A | Fuse Carrier *(Belling L1348) same as item CM* |
| BX | BO 4046/3 | Fuse, 1.5 amp *(for 100/125 volts)* |
| *or* | BO 4046/4 | Fuse, 1.0 amp *(for 200/210 volts) same as item CN* |
| *or* | BO 4046/2 | Fuse, 0.7 amp *(for 220/230 volts)* |
| BY | 4275/11 | Connexion Plate *(same as item CO)* |
| BZ | CT5133 | Connexion Tag *(as required) same as item CP* |
| CA | CB1152 | Terminal Strip *(10-way) 2 per unit (same as item CQ)* |
| CB | CB1151 | Terminal Strip *(6-way) same as item CR* |
| MOTOR CONNEXIONS AND BASE COMPONENTS *(SYNCHRONOUS MOTORS ONLY)* | | |
| | 4275/24 | Motor Connexion Socket CP *includes:-* |
| CC | BO 7601/3 | 4-way Socket *(Painton S4/MFS) same as item BP* |
| | 4275/30 | Motor Capacitor CP *includes:-* |
| CD | BO 4092/6 | Capacitor 2.0 $\mu$f, 440V *(230/250V)* } *as required by motor voltage* |
| *or* | BO 4092/7 | Capacitor 2.5 $\mu$f, 440V *(200/220V)* } |
| *or* | BO 4092/5 | Capacitor 7.75 $\mu$f, 250V *(115/125V)* } |
| CE | 4275/32 | Capacitor Strap |
| CF | 4014/199 | Support Block |
| CG | PK1203 | Capacitor Clip |
| | 4275/29 | Electrolytic Capacitor CP *includes:-* |
| CH | BO 4122/1 | Capacitor 64 $\mu$f, 150V *(for 100/125 Volt motors)* |
| *or* | BO 4122/3 | Capacitor 15 $\mu$f, 350V *(for 200/250 Volt motors)* |
| CJ | PB4764 | Bush *(for 100/125 Volt working)* |
| CK | PK1120 | Capacitor Clip *(for 100/125 Volt working)* |
| *or* | 4275/5 | Capacitor Clip *(for 200/250 Volt working)* |
| | 4014/399 | Resistor CP *includes:-* |
| CL | BO 3549/8 | Resistor 3.3k, ± 5% 3W |
| CM | BO 2932A | Fuse Carrier *(Belling L1348) same as item BW* |
| CN | BO 4046/5 | Fuse, 2.5 amp *(for 110/125 Volts)* |
| *or* | BO 4046/4 | Fuse, 1.0 amp *(for 220/250 Volts) same as item BX* |
| CO | 4275/11 | Connexion Plate *(same as item BY)* |
| CP | CT5133 | Connexion Tag *(same as item BZ)* |
| CQ | CB1152 | Terminal Strip *(10-way) 2 per unit (same as item CA)* |
| CR | CB1151 | Terminal Strip *(6-way) same as item CB* |
| TRANSMITTER UNIT TERMINAL STRIP | | |
| | CB1152 | Terminal Strip *(10-way) 2 per unit (same as item CA)* |
| CS | 4014/163 | Connexion Block Bracket |
| CT | PW5308 | Special Washer |
| CU | 4275/49 | Cable Cleat |
| *or* | BO 4063A/5 | Cable Clip *(for receiver only machines)* |
| CV | 4275/33 | Signals R.I.S. Unit |
| CW | 4176/44 | Cover Plate |

*See Page 79*

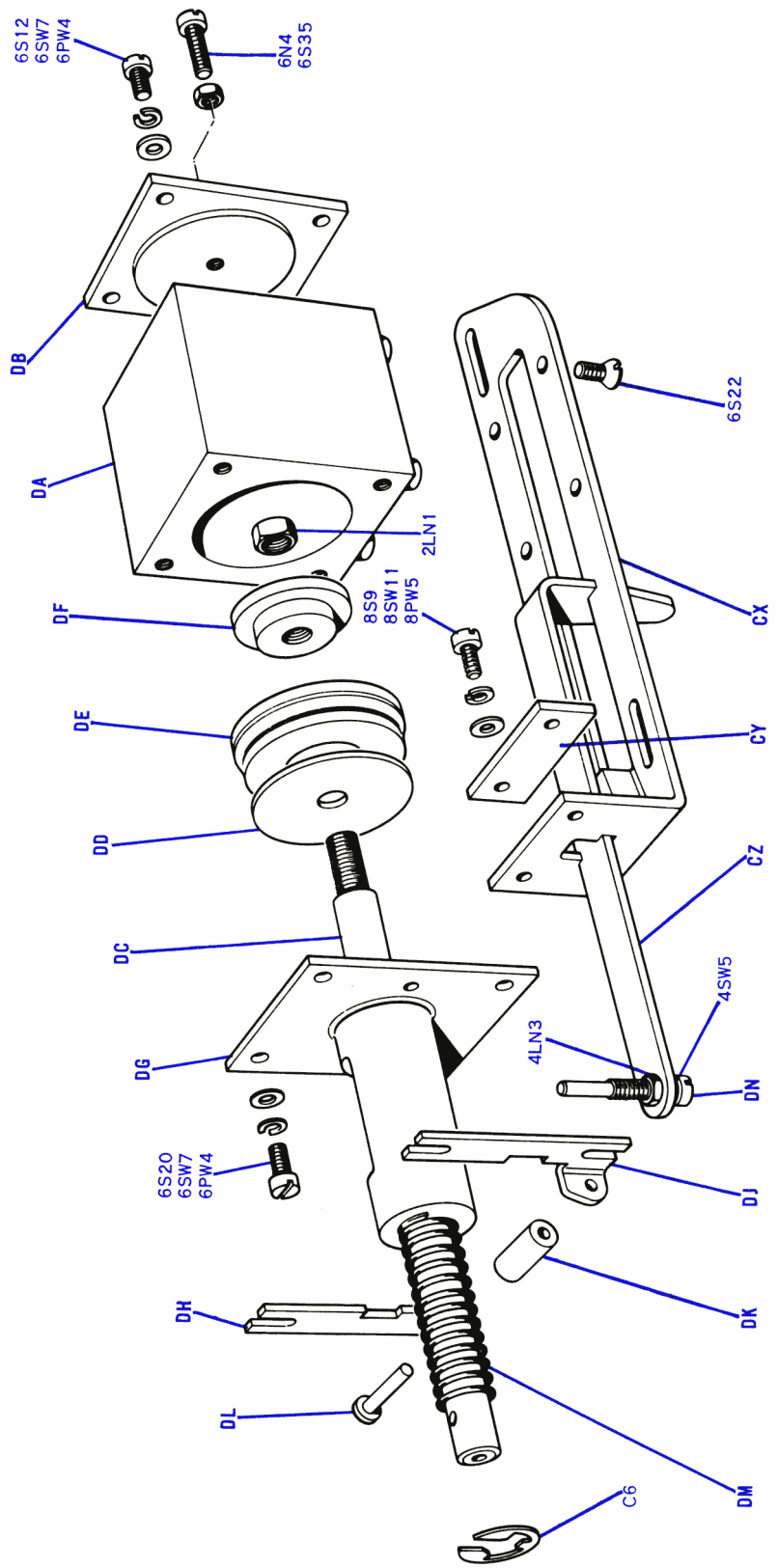


FIG. 7.12 DASHPOT CP 4014/67D

## MAIN BASE UNIT S4275 (Continued)

| *Index Letter* | *Part No.* | *Part Name* |
|---|---|---|
| DASHPOT MECHANISM | | |
| | 4014/67D | Dashpot CP *includes:-* |
| CX | 4014/213 | Mounting Bracket CP *includes:-* |
| CY | 4014/212 | Connecting Link Guide |
| CZ | 4014/216 | Dashpot Connecting Link |
| | 4014/181B | Cylinder CP *includes:-* |
| DA | 4014/172B | Dashpot Cylinder Casting |
| DB | 4014/174 | Back Plate |
| | 4014/180 | Piston Rod CP *includes:-* |
| DC | 4014/58A | Piston Rod |
| DD | PW5805 | Special Washer |
| DE | 4014/190 | Dashpot Piston Washer |
| DF | PW5796 | Clamping Washer |
| DG | 4014/70B | Dashpot Valve |
| DH | 4014/215 | Roller Bracket *(RH)* |
| DJ | 4014/214 | Roller Bracket *(LH)* |
| DK | RL1217 | Connecting Link Roller |
| DL | PP8010 | Roller Pivot Pin |
| DM | PG7578 | Dashpot Return Spring |
| DN | PS6525 | Link Screw |

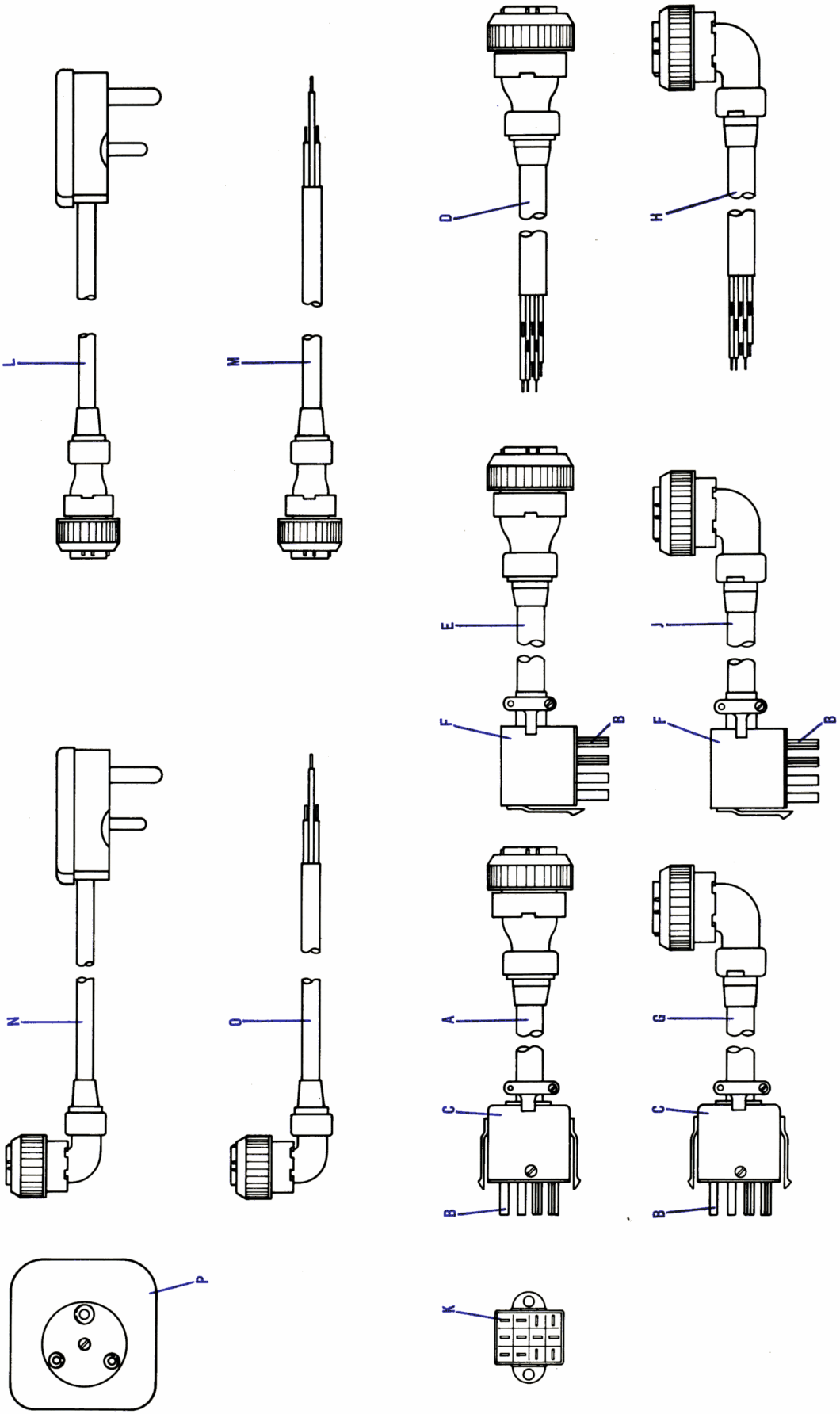


FIG. 7.13 PLUGS AND CORDS ARRANGEMENTS

# PLUGS AND CORDS ARRANGEMENTS

| *Index Letter* | *Part No.* | *Part Name* |
|---|---|---|
| * EXTERNAL SIGNAL PLUG AND CORDS ARRANGEMENTS | | |
| A | CD1715 | 12-way Plug and Socket Signal Cord Assembly *includes:-* |
| B | BO 7605/3 | 12-way Plug *(Painton Inner Assy P12)* |
| C | BO 7605/9 | 12-way Top Entry Cover *(Painton 12/CT/R2E)* |
| D | CD1648 | 12-way Socket Signal Cord Assembly |
| E | CD1649 | 12-way Plug and Socket Signal Cord Assembly *includes:-* |
| B | BO 7605/3 | 12-way Plug *(Painton Inner Assy P12)* |
| F | BO 7605/10 | 12-way Side Entry Cover *(Painton 12/CT/R1E)* |
| G | CD1817 | 12-way Plug and Socket Signal Cord Assembly *includes:-* |
| B | BO 7605/3 | 12-way Plug *(Painton Inner Assy P12)* |
| C | BO 7605/9 | 12-way Top Entry Cover *(Painton 12/CT/R2E)* |
| H | CD1816 | 12-way Socket and Signal Cord Assembly |
| J | CD1710 | 12-way Plug and Socket Signal Cord Assembly *includes:-* |
| B | BO 7605/3 | 12-way Plug *(Painton Inner Assy P12)* |
| F | BO 7605/10 | 12-way Side Entry Cover *(Painton 12/CT/R1E)* |
| K | BO 7605/4 | 12-way Socket *(Painton S.12/MFS)* |
| * POWER PLUGS AND CORDS ARRANGEMENTS | | |
| L | CD1647 | 3-way Plug and Socket Power Cord Assembly |
| M | CD1646 | 3-way Socket and Power Cord Assembly |
| N | CD1819 | 3-way Plug and Socket Power Cord Assembly |
| O | CD1818 | 3-way Socket and Power Cord Assembly |
| P | BO 2670A | 3 pin 5 amp Socket *(G.E.C. S4803)* |

* *Customers should state the length required when ordering spare connexion cords*

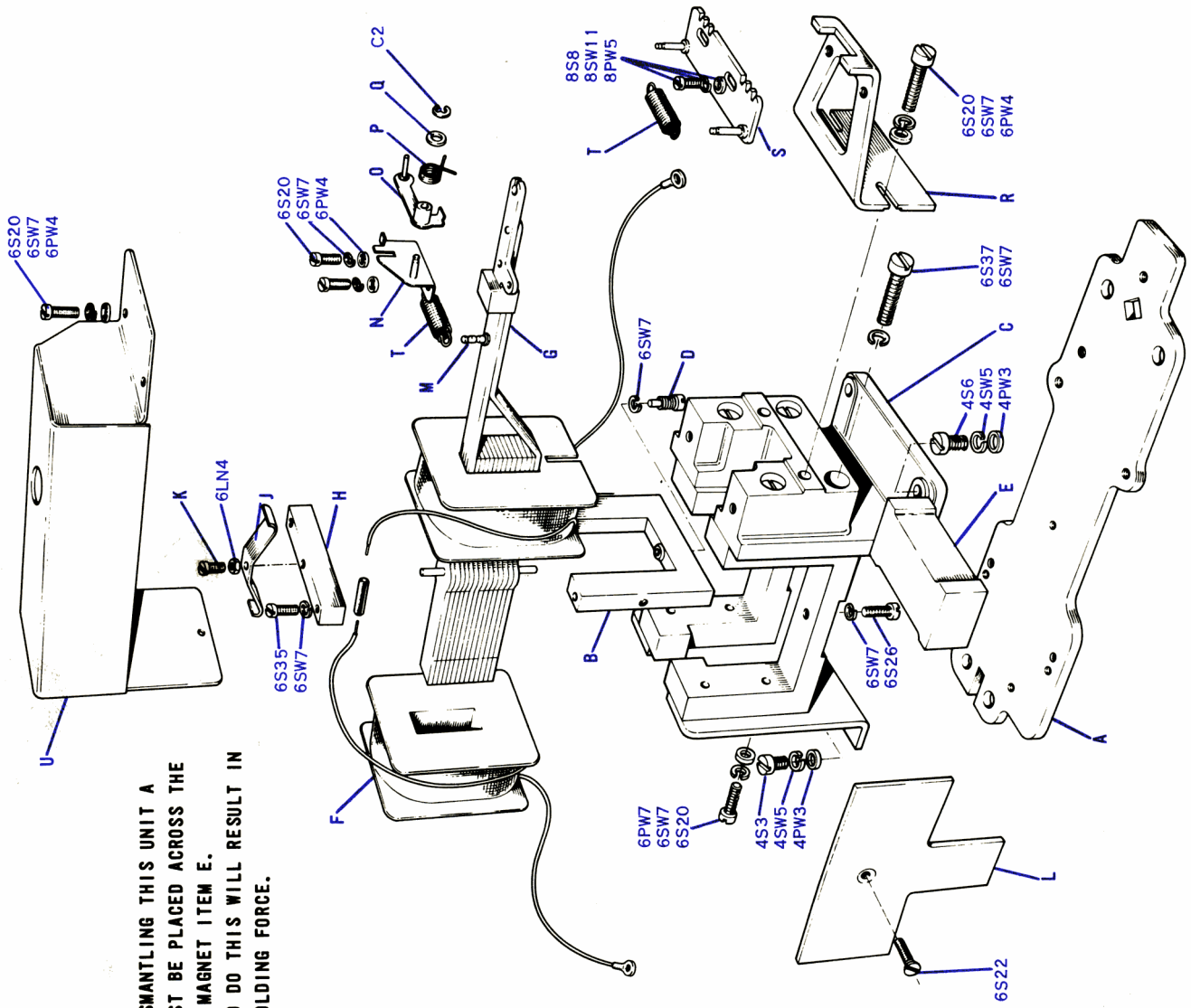


**WARNING.**

**BEFORE DISMANTLING THIS UNIT A KEEPER MUST BE PLACED ACROSS THE PERMANENT MAGNET ITEM E. FAILURE TO DO THIS WILL RESULT IN LOSS OF HOLDING FORCE.**

FIG. 7.14 ELECTROMAGNET UNIT S4284

# ELECTROMAGNET UNIT S4284

| *Index Letter* | *Part No.* | *Part Name* |
|---|---|---|
| BASE PLATE AND FIELD UNIT | | |
| A | 4007/13B | Base Plate |
| | 4007/42 | Field Unit CP *includes:-* |
| B | 4007/37 | Centre Support CP |
| C | 4007/4A | Field Core Grinding CP |
| ARMATURE COILS AND MAGNET | | |
| D | PS6518 | Lower Armature Pivot Screw |
| E | 4007/16A | Magnet |
| F | BO 3871/2 | Magnet Coil *(2 per unit) (50V and 100V units only)* |
| | *or* BO 3871/3 | Magnet Coil *(2 per unit) (12V and 24V units only)* |
| G | 4007/12 | Armature CP |
| H | 4007/18 | Bearing Housing CP |
| J | 4007/25 | Retaining Spring |
| K | PS6517 | Upper Armature Pivot Screw |
| L | 4007/24A | Coil Retaining Plate *(2 per unit)* |
| M | PP6289 | Special Anchor Pin |
| N | 4284/2 | Armature Link Pivot Bracket CP |
| O | 4284/5 | Armature Link CP |
| P | PG3204 | Torsion Spring |
| Q | PW5720 | Special Washer |
| | 4007/35 | Armature Stop Bracket CP *includes:-* |
| R | 4007/14 | Armature Stop Bracket |
| S | 4007/33 | Anchor Bar |
| T | PG7545 | Tension Spring *(2 per unit)* |
| U | 4007/21A | Cover CP |

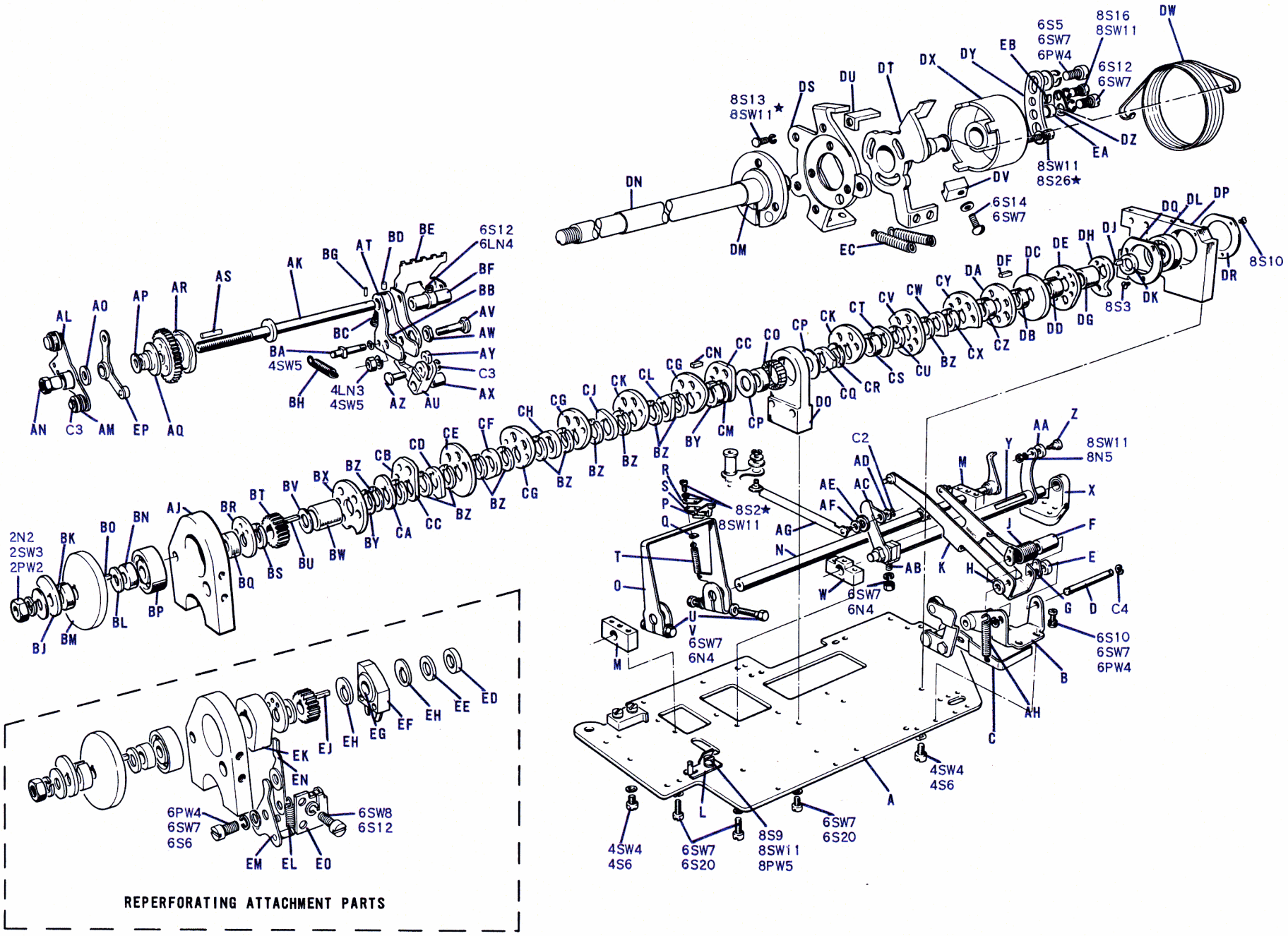


FIG. 7.15.1 TRANSLATOR UNIT 1st STAGE CP 4280/2

# TRANSLATOR UNIT 1st STAGE CP 4280/2

*GROUP 1 for machines without a Reperforating Attachment*

*GROUP 2 for machines with a Reperforating Attachment*

| *Index Letter* | *Part No.* | *Part Name* |
|---|---|---|
| BASE PLATE AND LINE FEED BRACKET | | |
| | 4280/1 GRP1 | Translator Unit Base Plate CP *includes:-* |
| A | 4010/99 | Base Plate Sub CP |
| | 4010/601 | Line Feed Bracket CP *includes:-* |
| B | 4151/64 | Line Feed Bracket CP |
| C | 4151/62B | Peckers Withdrawal Lever Sub CP |
| D | PP6828 | Special Parallel Pin |
| E | PB4489A | Bush |
| F | PB4499 | Bush |
| G | 4010/11 | Spring Anchor Plate *(2 per CP)* |
| H | PW5688 | Special Washer |
| J | PG3174 | Line Feed Return Spring |
| K | 4010/88A | Line Feed Bridge Lever CP |
| L | 4010/465 | Retention Frame Guide |
| M | 4010/12A | Strike Bearing *(2 per CP)* |
| STRIKER AND TRAVERSE SHAFTS | | |
| N | 4010/93 | Striker Shaft Sub CP |
| | 4010/105 | Pecker Frame CP *includes:-* |
| O | 4010/108 | Pecker Frame |
| P | 4010/107C | Pecker |
| Q | PF1136 | Lubricating Plug |
| R | 4010/109 | Lubricating Plug Retainer |
| S | 4010/635 | Retaining Plate |
| T | PG7481A | Tension Spring |
| U | PS5136 | Special Screw *(2 per CP)* |
| V | PW5190 | Special Washer *(4 per CP)* |
| W | 4010/22 | Traverse Front Bearing |
| X | 4010/91 | Traverse Rear Bearing CP |
| | 4010/521 | Detachable Traverse Shaft CP *includes:-* |
| Y | 4010/524 | Traverse Shaft Sub CP |
| Z | PS7129 | Special Screw |
| AA | RL1212 | Roller |
| AB | 4010/526 | Drawbolt |
| AC | 4010/525 | Traverse Link Lever CP |
| AD | PW5705 | Special Washer |
| AE | PF1125 | Lubrication Washer |
| AF | PW5232 | Shim |
| AG | 4010/111B | Traverse Link CP |
| AH | PG7639 | Tension Spring |
| TRAVERSE CAMSHAFT | | |
| | 4280/35 | Traverse Camshaft CP *includes:-* |
| AJ | 4010/77 | Front Camshaft Bearing Block |
| AK | 4010/24B | Selector Traverse Shaft |
| AL | 4280/7 | Compensator Lever CP *includes:-* |
| AM | RL1261 | Roller |
| AN | PN5140 | Special Nut |

| *Index Letter* | *Part No.* | *Part Name* |
|---|---|---|
| AO | PW5687 | Special Washer |
| AP | PW5755 | Special Washer |
| AQ | 4010/6 | Traverse Cam Thrust Washer |
| AR | 4010/95B | Traverse Cam CP |
| AS | PF1124 | Lubricating Plug *(3 per CP)* |
| AT | 4010/462 | Retention Frame CP |
| AU | 4010/466A | Rocker Arm CP *(includes felt plug)* |
| AV | PP5615 | Rocker Arm Pivot |
| AW | PB4731 | Hexagon Bush |
| AX | PB4732 | Rocker Arm Bearing Bush |
| AY | RL1209 | Cam Roller |
| AZ | PP7996 | Roller Pivot |
| BA | PP5616 | Anchor Pin |
| BB | EC1593 | Eccentric Square |
| BC | PG5152 | Compression Spring |
| BD | PF1162 | Lubrication Plug |
| BE | 4010/38C | Pin Resetting Frame |
| BF | 4010/3A | Retaining Bush |
| BG | PP2042 | Parallel Pin |
| BH | PG7592A | Tension Spring |
| MAIN CAMSHAFT AND CAM ASSEMBLY | | |
| BJ | 4010/53 | Keyboard Reset Cam 'W' |
| BK | 4010/28B | Cam Spacer |
| BL | PW5879 | Special Washer *(2 per unit)* |
| BM | 4280/14 | Compensator Cam 'VA' |
| BN | PB4496B | Bush |
| BO | KY1077 | Key |
| BP | BO 2575 | Ballrace *(BS292 - BRE¼)* |
| BQ | PB4500 | Bush *(used on Group 1 only)* |
| BR | 4010/58 | Answer Back Cam 'U' |
| BS | 4010/37 | Cam Spacer |
| BT | GR2202 | Traverse Drive Gear |
| BU | KY1042A | Key |
| BV | PW5754 | Special Washer |
| BW | PB4503 | Bush |
| BX | 4010/42A | Retention and Pin Reset Cam 'T' |
| BY | PW5739 | Shim *(0.005 in.) quantity as required* |
| BZ | 4010/68A | Cam Spacer *(12 per unit)* |
| CA | 4010/57 | Print and Feed Control Cam 'S' |
| CB | 4010/1 | Cam Spacer |
| CC | 4010/63A | Selector Plate Lift Cam 'J' *(2 per unit)* |
| CD | 4010/74A | Transmitter Cam No.5 'R' |
| CE | 4010/60A | Type Rotation Cam 'Q' |
| CF | 4010/73A | Transmitter Cam No.4 'P' |
| CG | 4010/61A | Type Rotation Cam 'K' *(3 per unit)* |
| CH | 4010/72A | Transmitter Cam No.3 'O' |
| CJ | 4010/71A | Transmitter Cam No.2 'N' |
| CK | 4010/62A | Type Lift and Shift Cam 'M' *(2 per unit)* |
| CL | 4010/70A | Transmitter Cam No.1 'L' |
| CM | 4010/2A | Cam Spacer |
| CN | KY1047 | Key |
| CO | 4010/458 | Set of Roller Race Parts |

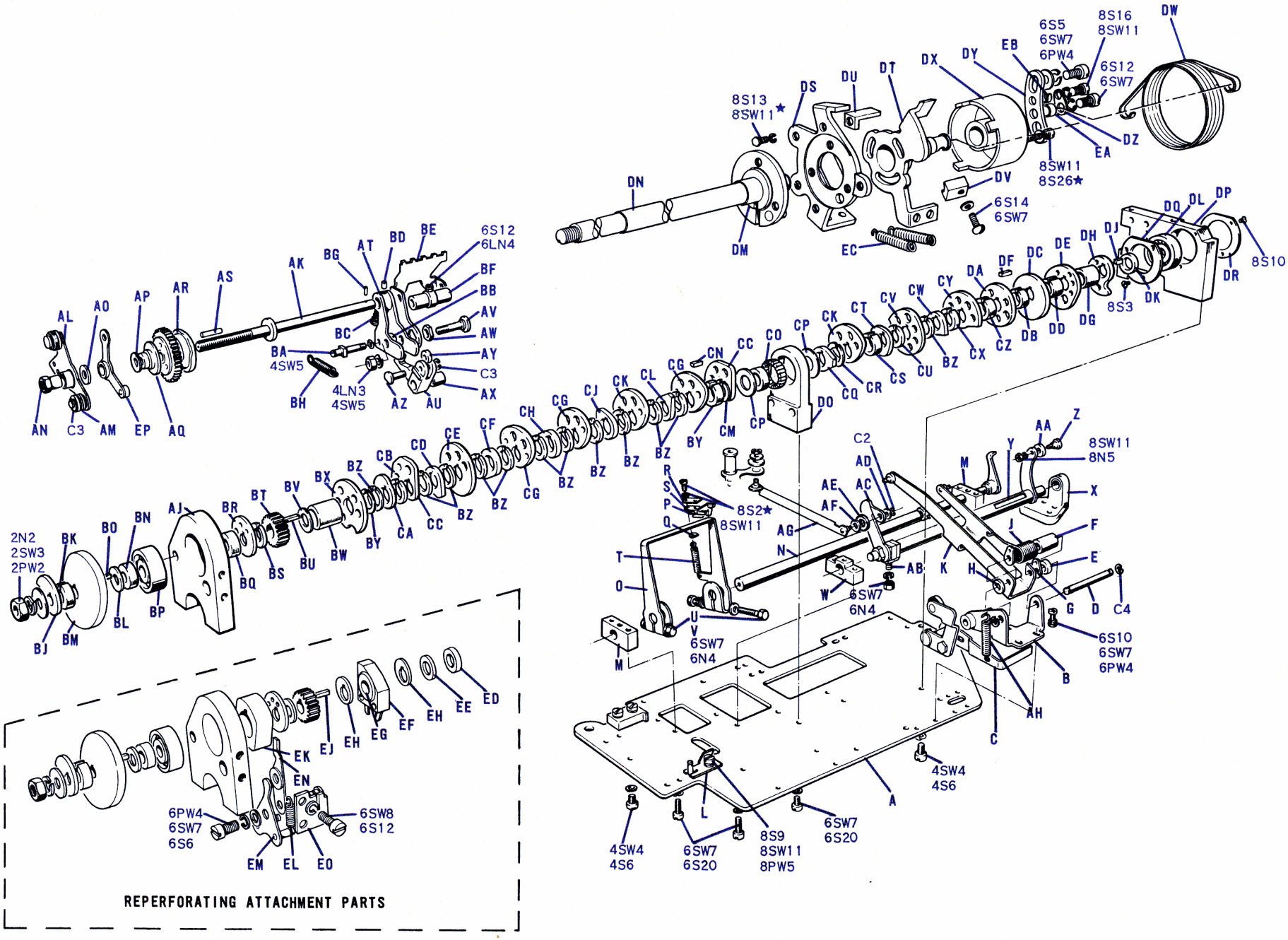


FIG. 7.15.2 TRANSLATOR UNIT 1st STAGE CP 4280/2

## TRANSLATOR UNIT 1st STAGE CP 4280/2 (Continued)

| *Index Letter* | *Part No.* | *Part Name* |
|---|---|---|
| CP | PW5728A | Special Washer *(2 per unit)* |
| CQ | 4010/69A | Transmitter Cam (Start) 'I' |
| CR | 4010/30A | Cam Spacer |
| CS | 4151/2A | Cam Spacer |
| CT | 4151/1A | Pecker Operating Cam 'GA' |
| CU | 4151/3A | Cam Spacer |
| CV | 4010/48A | Function Reset Cam 'G' |
| CW | 4010/75A | Transmitter Cam (Stop) 'F' |
| CX | 4010/67A | Cam Spacer |
| CY | 4010/59A | Print Cam 'E' |
| CZ | 4010/34A | Cam Spacer |
| DA | 4010/64A | Letter Feed Cam 'D' |
| DB | 4010/33A | Cam Spacer |
| DC | 4010/499 | Carriage Return Cam 'C' |
| DD | 4010/32A | Cam Spacer |
| DE | 4010/25A | Line Feed Cam 'B' |
| DF | KY1048 | Key |
| DG | PB4490A | Bush |
| DH | 4010/66 | Lagweight Cam 'A' |
| DJ | KY1040A | Key |
| DK | 4010/29 | Cam Spacer |
| DL | BO 2873 | Ball Race *(BS292 - BAL008)* |
| DM | PW5870 | Special Washer |
| DN | 4010/551A | Camshaft CP |
| MAINSHAFT BEARING BLOCKS | | |
| DO | 4010/371 | Middle Bearing Block |
| DP | 4010/81A | Rear Bearing Block CP |
| DQ | 4010/10B | Retaining Plate |
| DR | 4010/552 | Retaining Plate (rear) |
| TRANSLATOR CLUTCH MECHANISM | | |
| DS | 4280/19 | Trigger Stop and Frame |
| DT | 4280/9 | Clutch Trigger CP |
| DU | 4280/11 | Clutch Band Retainer *(3 per unit)* |
| DV | 4280/12 | Clamp Block |
| DW | 4280/16 | Translator Clutch Band |
| DX | 4280/21 | Bearing Cylinder |
| DY | 4280/10 | Outer Band Anchor CP |
| DZ | 4278/14 | Clamp Plate |
| EA | PB5046 | Collar |
| EB | 4280/22 | Clutch Band Clamp |
| EC | PG7674 | Tension Spring *(2 per unit)* |
| REPERFORATING ATTACHMENT PARTS ON TRANSLATOR UNIT CAMSHAFT | | |
| ED | 4010/408 | Cam Spacer |
| EE | PW5741 | Special Washer |
| EF | 4010/395 | Slide Block CP |
| EG | EC5079 | Eccentric |
| EH | 4010/406 | Retaining Disk *(2 per unit)* |
| EJ | KY1049 | Key |
| EK | 4010/405 | Chopper Cam |
| EL | PG7529 | Tension Spring |
| | 4010/409A | Chopper CP *includes:-* |
| EM | 4010/397A | Cam Follower CP |
| EN | 4010/399A | Chopper Lever CP |
| EO | 4010/401A | Support Bracket CP |
| ANSWER BACK ATTACHMENT PARTS ON TRAVERSE CAMSHAFT | | |
| EP | 4010/87 | Answer Back Feed Lever CP |

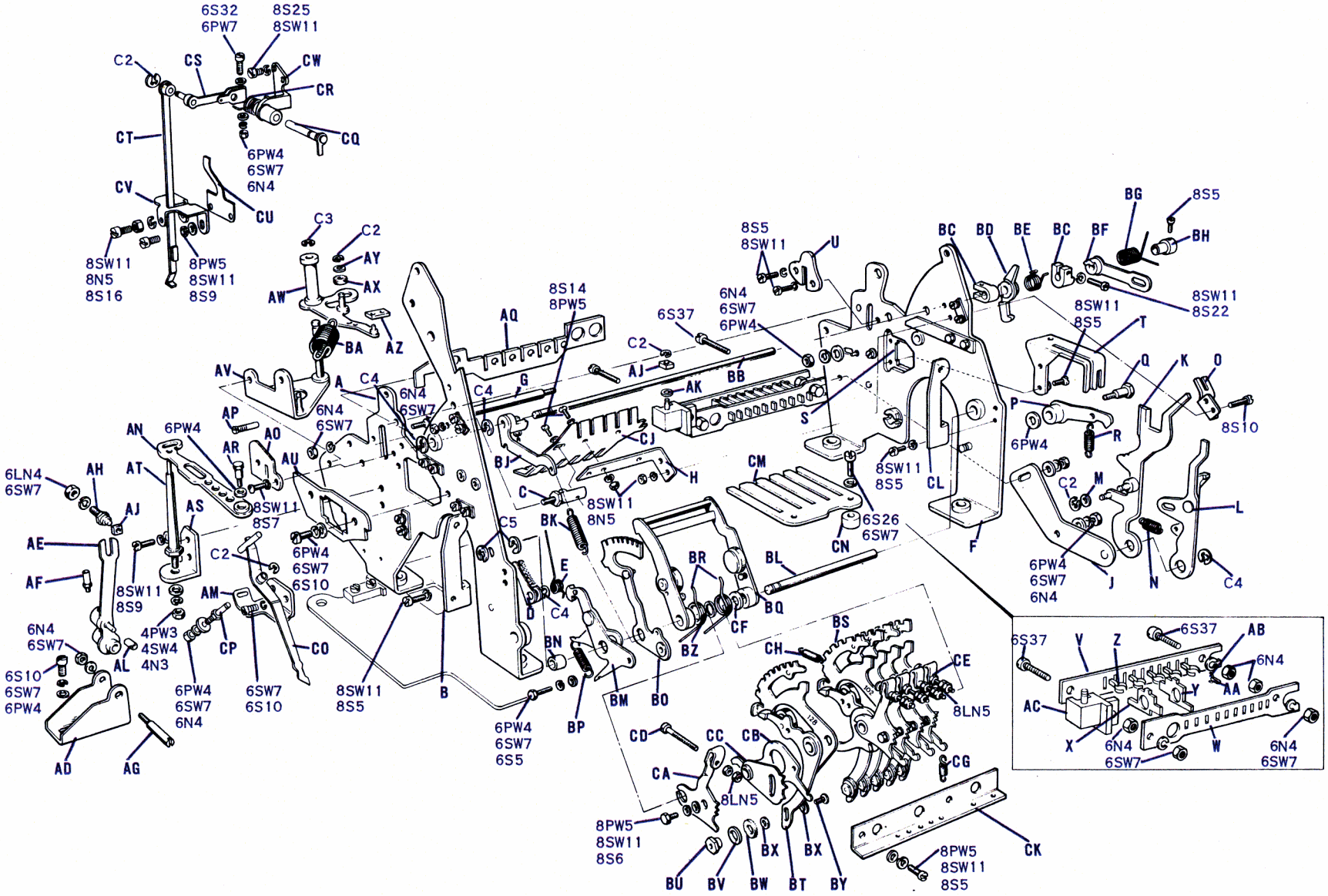


FIG. 7.16 TRANSLATOR UNIT 2nd STAGE CP 4280/3

# TRANSLATOR UNIT
## 2nd STAGE
## CP 4280/3

*GROUP 1 for send/receive machines with a keyboard*
*GROUP 2 for receiver only machines*
*GROUP 3 for send/receive machines with a keyboard and reperforating attachment*
*GROUP 4 for receiver only machines with a reperforating attachment*
*GROUP 5 for receiver only machines with a keyboard and reperforating attachment*

| *Index Letter* | *Part No.* | *Part Name* |
|---|---|---|
| **FRONT MAIN FRAME** | | |
| | 4010/446A GRP1 | Front Main Frame CP *(used on machines without a reperforating attachment)* } *includes:-* |
| | *or* 4010/446A GRP2 | Front Main Frame CP *(used on machines with a reperforating attachment)* } |
| A | 4010/117A | Front Main Frame Sub CP |
| B | 4010/193 | Stop Bracket and Cover Support *(used on Group 1 only)* |
| | *or* 4010/413 | Bracket CP *(used on Group 2 only)* |
| C | 4010/191 | Support Pin |
| D | 4010/411 | Lubricator CP |
| E | PG3223 | Torsion Spring |
| **MIDDLE MAIN FRAME** | | |
| | 4010/444A | Middle Main Frame CP *includes:-* |
| F | 4010/119A | Middle Main Frame CP |
| G | 4010/187 | Main Plate Stay |
| H | 4010/185 | Selector Plate Rack Support |
| **SHIFT CHANGE LEVER MECHANISM** | | |
| | 4010/445 | Figures and Letters Latch CP *includes:-* |
| J | 4010/171 | Figures and Letters Adjustment Plate CP |
| K | 4010/165 | Figures and Letters Change Lever CP |
| L | 4010/169 | Figures and Letters Sub Lever CP |
| M | PW5701 | Special Washer |
| N | PG7478 | Tension Spring |
| O | 4010/186 | Rack |
| P | 4010/173 | Figures and Letters Retainer CP |
| Q | PS5132 | Special Screw |
| R | PG7479 | Tension Spring |
| S | 4010/161 | Rear Pin Box Guide Plate CP |
| T | 4010/163 | Shift and Function Reset Rack CP |
| U | 4010/344 | Side Plate *(Rear)* |
| **PIN BOX** | | |
| | 4010/322 | Pin Box CP *includes:-* |
| V | 4010/318 | Pin Rack *(large slots)* |
| W | 4010/319A | Pin Rack *(small slots)* |
| X | 4010/320A | Selection Pin *(bottom strike)* |
| Y | 4010/321A | Selection Pin *(top strike)* |
| Z | 4010/367A | Pin Damping Spring *(outer) 5 per CP* |
| AA | 4010/368 | Pin Damping Spring *(inner) 5 per CP* |
| AB | 4010/369 | Staple |
| AC | 4010/317B | Pin Box End Block CP |
| **PIN BOX TRAVERSE MECHANISM** | | |
| | 4010/106A | Pin Box Traverse Bracket CP *includes:-* |
| AD | 4010/27 | Traverse Lever Pivot Bracket |
| | 4010/85A | Pin Box Traverse Lever CP *includes:-* |
| AE | 4010/414A | Pin Box Traverse Lever Sub CP |
| AF | 4010/416 | Oil Pot CP |
| AG | PP5588 | Threaded Pin |
| AH | PP5589 | Threaded Pin |
| AJ | 4010/346 | Slide Block *(2 per unit)* |
| AK | PW5705 | Special Washer |
| AL | RL1186 | Roller |
| AM | 4010/325 | Pivot Bracket *(used on Groups 1 and 2 only)* |
| | *or* 4010/404 | Pivot Bracket *(used on Groups 3, 4 and 5 only)* |
| AN | 4010/315 | Traverse Multiplying Lever CP |
| AO | 4010/333B | Slide Plate Front } *used on Groups 1, 3 and 5 only* |
| AP | PS5673 | Special Screw for Selector Frame } |
| AQ | 4010/350 | Selector Bars Traverse Plate } |
| AR | PS5395 | Special Screw |
| AS | 4010/366 | Traverse Control Bracket |
| AT | PP7970 | Shouldered Pin |
| AU | 4010/348 | Front Pin Box Guide Plate |
| AV | 4010/313 | Traverse Pivot Bracket CP |
| AW | 4010/311 | Traverse Bellcrank CP |
| AX | PF1140 | Lubricating Washer |
| AY | PW5693 | Special Washer |
| AZ | 4010/336 | Pecker Slide Block |
| BA | PG7484 | Tension Spring |
| **PRINT CONTROL SHAFT** | | |
| BB | 4010/183 | Print Control Shaft |
| BC | 4010/182 | Dog *(2 per unit)* |
| BD | 4010/179 | Print Hook CP |
| BE | PG3193 | Torsion Spring |
| BF | 4010/177B | Letter Feed Arm CP |
| BG | PG3194 | Torsion Spring |
| BH | PB4578 | Bush |
| BJ | 4010/175A | Print Release Pivot Arm CP |
| BK | PG7477 | Tension Spring |
| **SELECTOR TRANSMITTER LEVER ASSEMBLY** | | |
| | 4010/448 GRP1 | Selector Transmitter Lever Assembly CP *(used on Groups 1 and 3 only)* } *includes:-* |
| | *or* 4010/448 GRP2 | Selector Transmitter Lever Assembly CP *(used on Groups 2, 4 and 5 only)* } |
| BL | 4010/184 | Selector Lever Pivot |
| | 4010/447 | Print Release Lever and Shoe Carrier CP *includes:-* |
| BM | 4010/159 | Shoe Arm Carrier CP |
| BN | PB4579 | Bush |
| BO | 4010/139 | Print Release Lever CP |
| BP | PG7474 | Tension Spring |
| BQ | 4010/124A | Selector Plate Lift Frame CP |
| BR | PG3192B | Torsion Spring *(2 per unit)* |
| BS | 4010/435 | Set of Selector Code Plates *(5 per unit) Marking on each Lever should be stated when ordering* |
| | 4010/144A | Aggregate Bellcrank CP *(4 per unit)* } *includes:-* |
| | 4010/148A | Aggregate Bellcrank CP } |
| BT | 4010/143A | Aggregate Bellcrank Sub CP *(used on 4010/144A only)* |
| | *or* 4010/147A | Aggregate Bellcrank Sub CP *(used on 4010/148A only)* |
| BU | PB4405 | Shouldered Bush |
| BV | PW5681 | Shim *(0.003 in.)* |
| BW | PF1113 | Lubricating Washer |
| BX | PW5674 | Special Washer *(2 per CP)* |
| BY | PS5122 | Special Screw |
| BZ | PB4656 | Spacer *(5 per unit) used on Groups 2, 4 and 5 only* |
| | 4010/153 | Transmitter Lever CP *(3 per unit)* } *used on Groups 1 and 3 only* |
| | 4010/154 | Transmitter Lever CP *(2 per unit)* } *includes:-* |
| CA | 4010/152 | Transmitter Lever |
| CB | 4010/151 | Transmitter Cam Follower |
| CC | 4010/150 | Transmitter Lever Adjustment CP |
| CD | PS7112 | Special Screw |
| CE | PN5102 | Special Nut *(used on 4010/154 only)* |
| CF | PW5040 | Special Washer *(0.005 in.) quantity as required* |
| CG | PG7476 | Tension Spring *(5 per unit)* |
| CH | PG7543 | Tension Spring *(5 per unit) coloured BLUE used on Groups 2, 4 and 5 only* |
| | *or* PG7475A | Tension Spring *(5 per unit) coloured RED used on Groups 1 and 3 only* |
| CJ | 4010/137 | Selector Lever Rack CP |
| CK | 4010/192A | Stop Bracket *(used on Groups 1 and 2 only)* |
| | *or* 4010/436A | Stop Bracket *(used on Groups 3, 4 and 5 only)* |
| CL | 4010/193 | Stop Bracket and Cover Support |
| **AGGREGATE BELLCRANK RACK** | | |
| CM | 4010/335 | Bellcrank Rack |
| CN | PB4583 | Bush |
| **REPERFORATING ATTACHMENT PARTS ON TRANSLATOR UNIT** | | |
| CO | 4010/403 | Throwout Lever CP |
| CP | PP9201 | Flanged Pin |
| *The following parts are only fitted to machines with an Answer Back Unit* | | |
| CQ | 4011/26 | Trip Arm CP |
| CR | PG3184 | Special Spring |
| CS | 4011/28 | Answer Back Trip Lever CP |
| CT | 4010/309 | Answer Back Trip Link CP |
| CU | PG3196 | Special Spring |
| CV | 4010/323 | Answer Back Link Rack |
| CW | 4011/24 | Answer Back Trip Shaft Bracket CP |

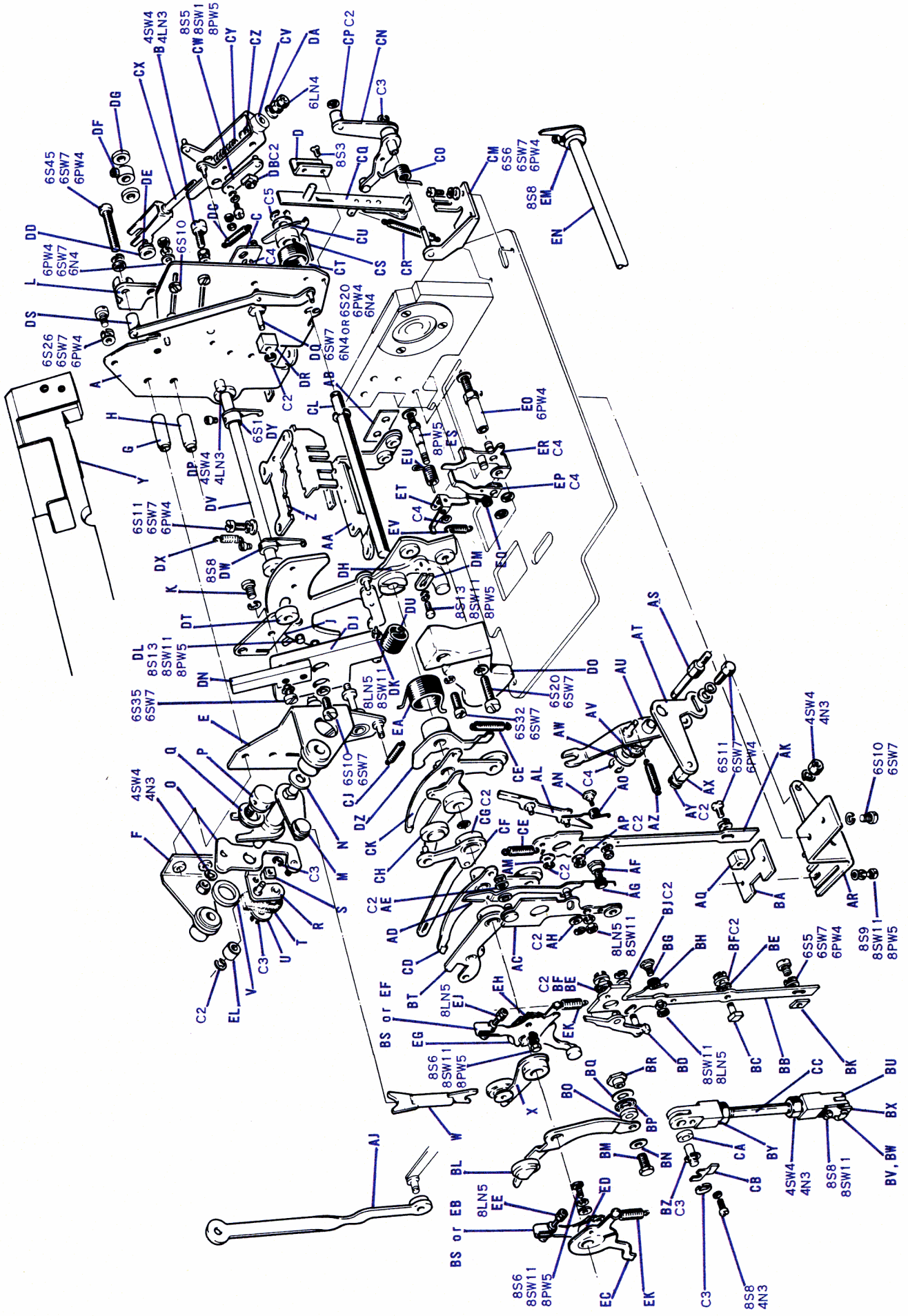


FIG. 7.17.1 TRANSLATOR UNIT 3rd STAGE S4280

# TRANSLATOR UNIT
## 3rd STAGE
## S4280

*GROUP 1 for send/receive machines with a keyboard*

*GROUP 2 for receiver only machines*

*GROUP 3 for send/receive machines with a keyboard and reperforating attachment*

*GROUP 4 for receiver only machines with a reperforating attachment*

*GROUP 5 for receiver only machines with a keyboard and reperforating attachment*

| *Index Letter* | *Part No.* | *Part Name* | |
|---|---|---|---|
| | S4293 | FUNCTION BAR UNIT | *See Page 41* |
| | 4280/3 | TRANSLATOR UNIT 2nd STAGE | *See Page 35* |
| | 4280/2 | TRANSLATOR UNIT 1st STAGE | *See Page 31* |
| REAR FRAME | | | |
| | 4010/449B GRP2 | Rear Frame CP *includes:-* | |
| A | 4010/510A | Rear Frame Sub CP | |
| B | EC1576A | Eccentric | |
| C | 4010/509 | Abutment Frame Pivot Plate CP | |
| D | 4010/324 | Guide Bracket | |
| FUNCTION RESET MECHANISM | | | |
| E | 4010/203A | Sub Plate CP | |
| F | 4010/211 | Function Reset Bracket CP | |
| G | 4010/340 | Distance Pillar *(long)* | |
| H | 4010/341 | Distance Pillar *(short)* | |
| J | 4010/349 | Sub Plate Rack | |
| K | PS5145 | Special Screw | |
| L | 4010/330 | Steady Bracket | |
| | 4010/216 | Function Reset Shaft CP *includes:-* | |
| M | PF1143 | Lubricating Washer | |
| N | PW5917 | Shim | |
| O | 4010/221 | Function Reset Adjustment Arm CP | |
| P | EC1577 | Eccentric Screw | |
| Q | PW5708 | Special Washer | |
| R | 4010/498 | Function Abutment Plate CP | |
| S | 4010/345 | Abutment Block | |
| T | PF1141 | Lubricating Pad | |
| U | PW5707 | Special Washer | |
| V | PF1138 | Lubricating Washer | |
| W | 4010/292 | Push Rod | |
| X | 4010/219B | Function Reset Lever CP | |
| Y | 4016/90 | Contact Plate Support CP | |
| VERTICAL LEVER RACK | | | |
| | 4010/451 | Vertical Lever Rack CP *includes:-* | |
| Z | 4010/208 | Vertical Lever Rack CP | |
| AA | 4010/205 | Vertical Lever Rack Support CP | |
| AB | 4010/424 | Shim *(0.015 in.)* | |
| LINE FEED VERTICAL LEVER | | | |
| | 4010/249A | Line Feed Vertical Lever CP *includes:-* | |
| AC | 4010/248 | Line Feed Vertical Lever Sub CP | |
| AD | 4010/245B | Line Feed Latch CP | |
| AE | PW5798 | Shim *(0.005 in.) quantity as required* | |
| AF | PS5396 | Special Screw | |
| AG | PG3199B | Torsion Spring | |
| AH | PW5793 | Special Washer | |
| AJ | 4010/240 | Line Feed Link CP | |

| *Index Letter* | *Part No.* | *Part Name* |
|---|---|---|
| CARRIAGE RETURN VERTICAL LEVER | | |
| | 4010/238A | Carriage Return Vertical Lever CP *includes:-* |
| AK | 4010/237 | Carriage Return Vertical Lever Sub CP |
| AL | 4010/235B | Carriage Return Latch CP |
| AM | PW5798 | Shim *(0.005 in.) 2 per CP* |
| AN | PS5396 | Special Screw |
| AO | PG3200B | Torsion Spring |
| AP | PW5793 | Special Washer |
| AQ | 4010/328 | Carriage Return Driving Block |
| | 4010/452 | Lower Carriage Return and Line Feed Rack CP *includes:-* |
| AR | 4010/225 | Lower Carriage Return and Line Feed Rack Sub CP |
| AS | PP5596 | Threaded Pin |
| AT | 4010/229 | Carriage Return Adjusting Arm CP |
| AU | 4010/227 | Carriage Return Operating Arm CP |
| AV | PF1114 | Lubricating Washer |
| AW | PW5702 | Special Washer |
| AX | 4010/334 | Pivot Block |
| AY | PF1139 | Lubricating Washer |
| AZ | PG7456 | Tension Spring |
| BA | 4010/326 | Retaining Plate |
| LETTER FEED VERTICAL LEVER | | |
| | 4010/260 | Letter Feed Vertical Lever CP *includes:-* |
| BB | 4010/259 | Letter Feed Vertical Lever Sub CP |
| BC | PP7947 | Shouldered Pin |
| BD | 4010/257 | Letter Feed Latch CP |
| BE | PF1142 | Lubricating Washer *(2 per CP)* |
| BF | PW5710 | Special Washer *(2 per CP)* |
| BG | PS5396 | Special Screw |
| BH | PG3200B | Torsion Spring |
| BJ | PW5709 | Special Washer |
| BK | 4010/327 | Letter Feed Lever Abutment |
| FUNCTIONAL LEVERS | | |
| | 4010/280B | Shift Bellcrank CP *comprises:-* |
| BL | 4010/279B | Shift Bellcrank Sub CP |
| BM | PS5152 | Special Screw |
| BN | PW5674 | Special Washer |
| BO | PW5820 | Special Washer |
| BP | PF1113 | Lubricating Washer |
| BQ | PW5681 | Shim |
| BR | PB4405 | Shouldered Bush |
| BS | PB4656 | Spacer *(2 per unit)* |
| | 4010/455 | Print Lever and Shackle CP *includes:-* |
| BT | 4010/283A | Print Lever CP |
| BU | 4010/338 | Print Shackle |
| BV | PP6836 | Special Parallel Pin |
| BW | PF1116 | Lubricating Washer *(same as item CA)* |
| BX | 4010/331 | Pin Retainer |
| | 4010/453 | Print Shackle and Rod CP *includes:-* |
| BY | 4010/338 | Print Shackle |
| BZ | PP6836 | Special Parallel Pin |
| CA | PF1116 | Lubrication Washer *(same as item BW)* |
| CB | 4010/331 | Pin Retainer |
| CC | 4010/339 | Print Adjustment Rod |
| CD | 4010/255 | Letter Feed Lever CP |
| CE | PG7387 | Tension Spring *(2 per unit)* |
| | 4010/450 | Letter Feed Bellcrank CP *includes:-* |
| CF | 4010/251 | Letter Feed Bellcrank CP |
| CG | 4010/329 | Letter Feed Link |
| CH | 4010/503 | Carriage Return Lever CP |
| CJ | PG7100 | Tension Spring |
| CK | 4010/243 | Line Feed Lever CP |
| CL | 4010/347 | Function Lever Pivot |

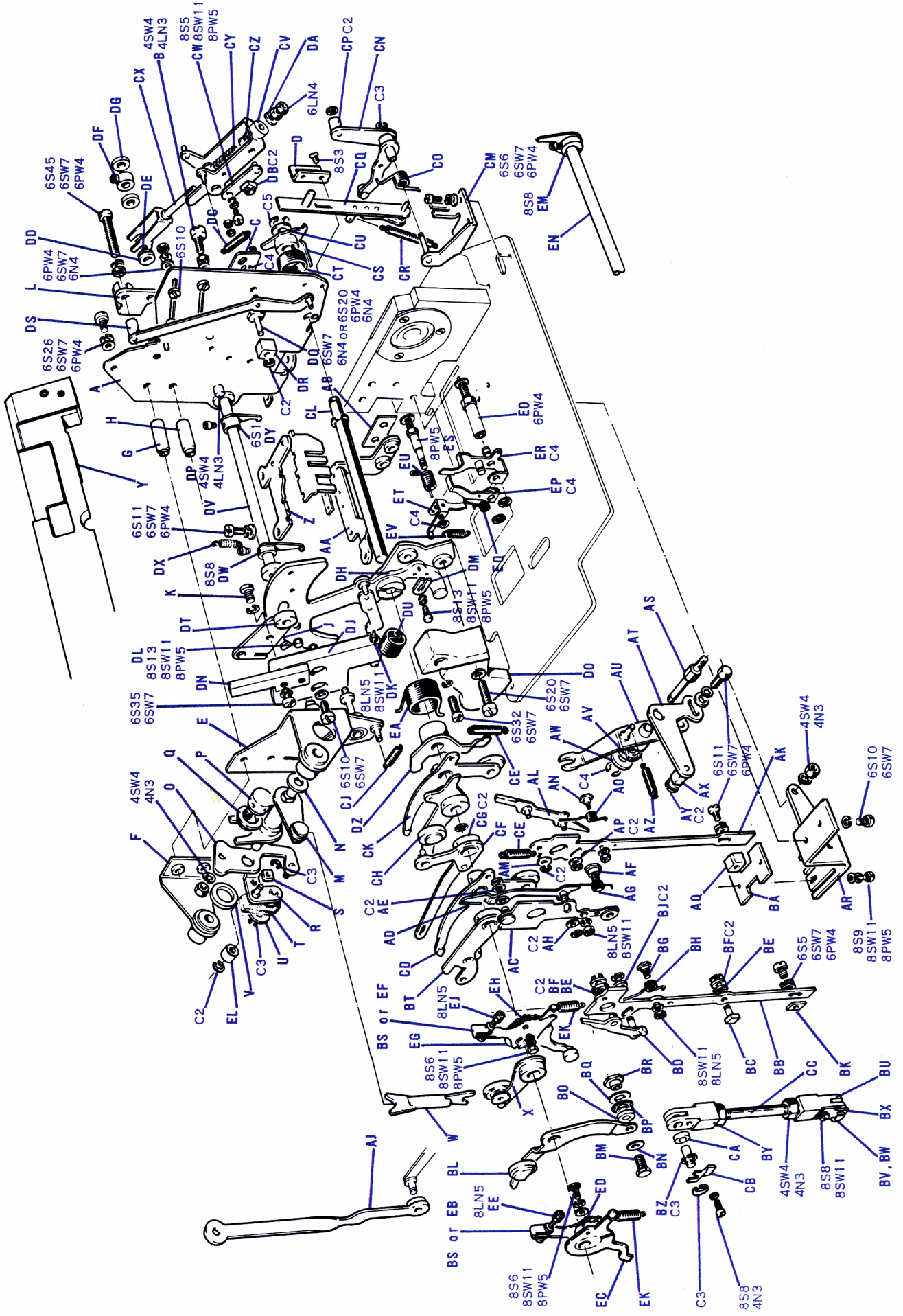


FIG. 7.17.2 TRANSLATOR UNIT 3rd STAGE S4280

# TRANSLATOR UNIT 3rd STAGE S4280 (Continued)

| *Index Letter* | *Part No.* | *Part Name* |
|---|---|---|
| TRIP OFF MECHANISM | | |
| | 4151/273 | Trip Off CP *includes:-* |
| CM | 4010/272 | Trip Lever Bracket CP |
| CN | 4169/39 | Trip Bellcrank CP |
| CO | PG3198A | Torsion Spring |
| CP | RL1188 | Roller |
| CQ | 4010/270 | Trip Lever CP |
| CR | PG7483 | Tension Spring |
| ABUTMENT FRAME | | |
| CS | 4010/266 | Abutment Frame Trip Lever CP |
| CT | PG3227 | Torsion Spring |
| CU | PW5699 | Shim *(0.003 in.)* |
| | 4010/454A | Abutment Frame CP *includes:-* |
| CV | 4010/264A | Outer Abutment Frame CP |
| CW | 4010/417 | Adjustment Plate CP |
| CX | 4010/262B | Inner Abutment Frame CP |
| CY | PG5155 | Compression Spring |
| CZ | PW5714 | Shim |
| DA | PW5843 | Special Washer |
| DB | 4010/337 | Slide Block |
| DC | PG7536 | Tension Spring |
| DD | PW5703 | Special Washer |
| DE | PW5645 | Thrust Washer *(2 max, quantity as required)* |
| DF | CS1057 | Set Collar and Screw |
| DG | PF1142 | Lubricating Washer |
| ADDITIONAL PARTS REQUIRED FOR TRANSMITTER MACHINES | | |
| | 4010/449B GRP1 | Rear Frame CP *includes:-* |
| | 4010/298 GRP1 | Lagweight 3rd CP *includes:-* |
| DH | 4010/296 | Lagweight 2nd CP |
| | 4010/389 | Sub Weight CP *includes:-* |
| DJ | 4010/354 | Sub Weight |
| DK | PS6119 | Special Screw |
| DL | 4010/360 | Lagweight Hook Plate |
| DM | 4010/297 | Abutment |
| DN | 4010/639 | Lagweight |
| DO | 4010/386 | Balance Weight |
| DP | EC1579 | Eccentric |
| DQ | EC1578B | Eccentric |
| DR | 4010/390 | Lagweight Stop |
| DS | 4010/302 | Lagweight Spring Change Lever CP |
| DT | PW5706 | Special Washer *(2 per CP)* |
| DU | PG3220 | Tension Spring |
| DV | 4010/343 | Lagweight Release Shaft |
| DW | 4010/304 | Lagweight Trip Lever CP |
| DX | PG7480 | Tension Spring |
| DY | 4010/300 | Lagweight Release Lever CP |
| DZ | 4010/306 | Contact Operating Lever CP |
| | *or* PB4655 | Collar *(used on Groups 2 and 4 only)* |
| | *or* PB4736 | Collar *(used on Group 5 only)* |
| EA | PG3197A | Torsion Spring |
| | 4010/289 | Transmitter Lever CP *(Start) includes:-* *(used on Groups 1 and 3 only in place of PB4656)* |
| EB | 4010/288 | Transmitter Lever |
| EC | 4010/151 | Transmitter Cam Follower |
| ED | 4010/284 | Transmitter Lever Adjustment CP |
| EE | PS7112 | Transmitter Adjustment Screw |
| | 4010/287 | Transmitter Lever CP *(Stop) includes:-* *(used on Groups 1 and 3 only in place of item BS)* |
| EF | 4010/152 | Transmitter Lever |
| EG | 4010/286 | Transmitter Cam Follower CP |
| EH | 4010/150 | Transmitter Lever Adjustment CP |
| EJ | PS7112 | Transmitter Adjustment Screw |
| EK | PG7476 | Tension Spring |
| TWO COLOUR PRINTING PARTS ON TRANSLATOR UNIT | | |
| *The following parts are only fitted to machines with the Two Colour Printing facility* | | |
| EL | RL1186 | Roller |
| EM | 4010/470 | Control Mechanism Trip Lever CP |
| EN | 4010/472 | Lagweight Release Shaft |
| AUTOMATIC CARRIAGE RETURN LINE FEED PARTS ON TRANSLATOR UNIT | | |
| *The following parts are only fitted to machines with the Automatic Carriage Return Line Feed facility* | | |
| EO | PP9184 | Flanged Pin |
| | 4010/362A | Automatic Carriage Return Line Feed Lever CP *includes:-* |
| EP | 4010/365A | Pawl |
| EQ | PG3214 | Torsion Spring |
| ER | 4010/364A | Lever Sub CP |
| ES | PP9183 | Flanged Pin |
| ET | 4010/361 | Lever Latch |
| EU | PG3213 | Torsion Spring |
| EV | PG7512 | Tension Spring |

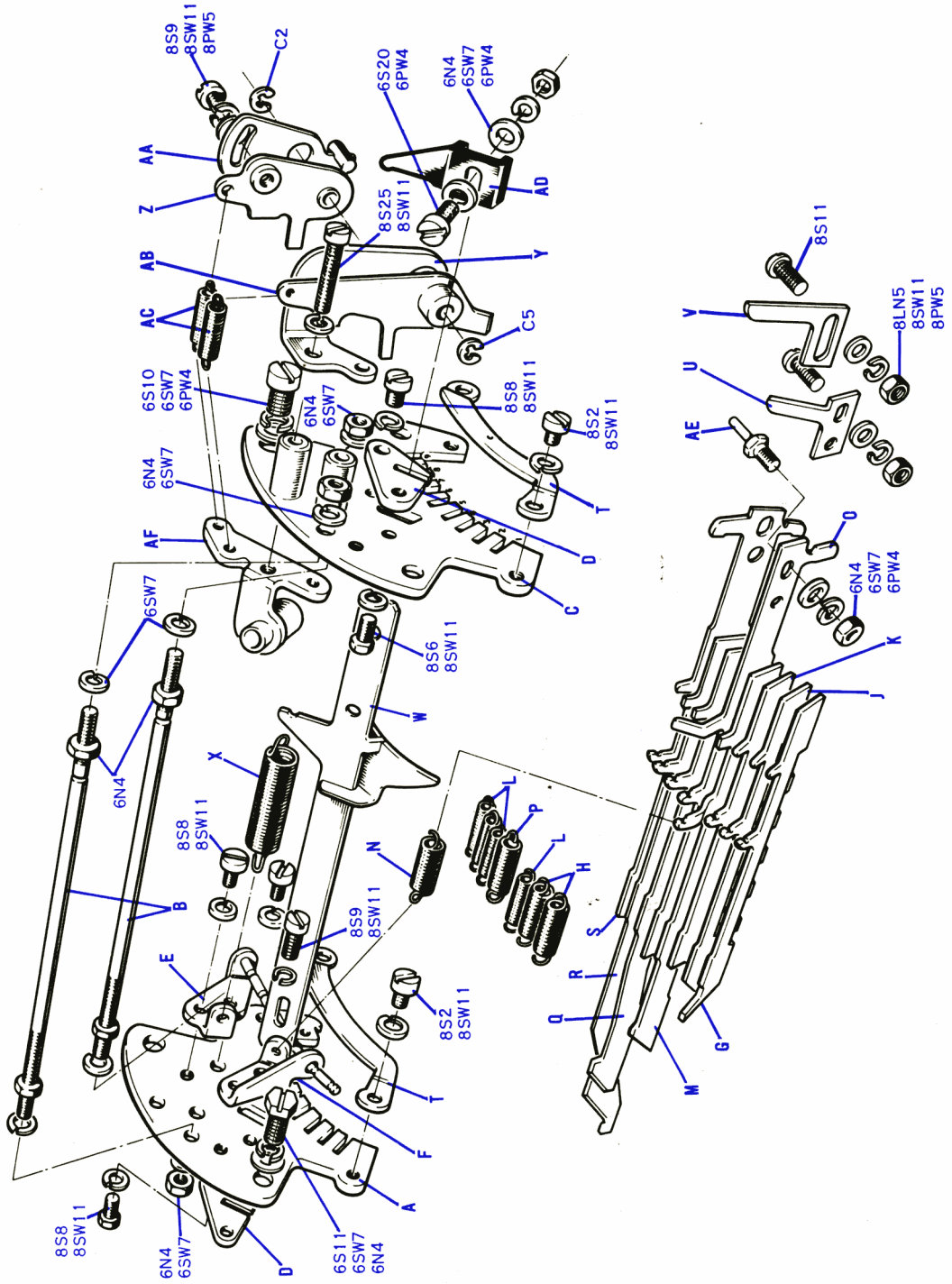


FIG. 7.18 FUNCTION BAR UNIT S4293

# FUNCTION BAR UNIT S4293

| *Index Letter* | *Part No.* | *Part Name* |
|---|---|---|
| RACKS | | |
| A | 4011/1 | Function Bar Rack |
| B | 4011/7 | Screwed Stay Rod *(2 per unit)* |
| C | 4011/2 | Function Bar (Front) Rack CP |
| D | 4011/3 | Function Reset Slide Plate *(2 per unit)* |
| E | 4011/85 | Spring Anchor Bracket |
| F | 4011/6 | Spring Anchor Support |
| FUNCTION BARS AND SPRINGS | | |
| | *Assembly of the Function Bar Unit varies according to the required operation of the machine. The Function Bars and Springs listed below are those for a machine operating on the International 5-Unit Teleprinter Code. Customers requiring spare Function Bars and Springs for machines operating on codes other than this should quote the bar position number and the serial number of the machine.* | |
| G | 4011/19A | Function Bar *(position 1)* |
| H | PG7468C | Tension Spring *(used on bars in positions 1 and 2)* |
| J | 4011/18A | Function Bar *(position 2)* |
| K | 4011/17A | Function Bar *(position 3)* |
| L | PG7466C | Tension Spring *(used on bars in positions 3, 6, 7 and 8)* |
| M | 4011/47A | Function Bar *(position 4)* |
| N | PG7552A | Tension Spring *(used on bar in position 4)* |
| O | 4011/50 | Function Bar *(position 5)* |
| P | PG7557 | Tension Spring *(used on bar in position 5)* |
| Q | 4011/75 | Function Bar *(position 6)* |
| R | 4011/77 | Function Bar *(position 7)* |
| S | 4011/62 | Function Bar *(position 8)* |
| T | 4011/20 | Function Bar Retaining Plate *(2 per unit)* |
| U | 4173/122 | Bell Function Bar Extension |
| V | 4011/87 | WRU? Switch Operating Arm |
| FUNCTION RESET | | |
| W | 4011/10A | Function Reset Bar CP |
| X | PG7467A | Tension Spring |
| BELL AND 'WHO ARE YOU?' SWITCH ARMS | | |
| Y | 4011/22 | Bell and WRU? Lever Pivot Bracket CP |
| Z | 4011/32 | Bell Switch Arm CP |
| AA | 4011/35 | Bell Adjustment Plate CP |
| AB | 4011/30 | WRU? Switch Arm CP |
| AC | PG7066 | Tension Spring |
| AD | 4011/11 | Contact Reset Arm |
| AE | PP9120 | Flanged Pin |
| AF | 4011/24 | Answer Back Trip Shaft Bracket CP |

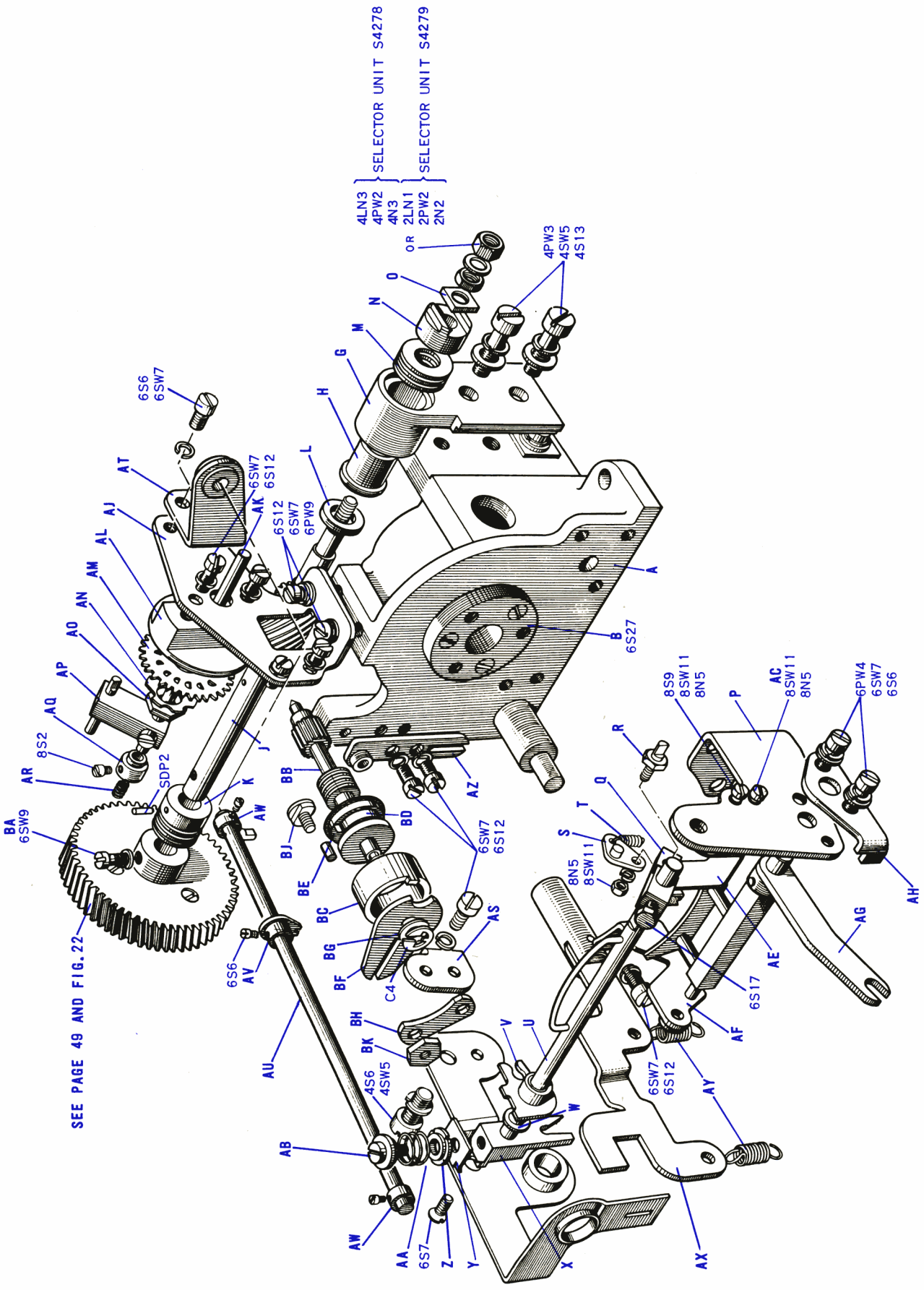


FIG. 7.19 SELECTOR UNITS S4278 AND S4279

**SELECTOR UNIT S4278 (Single Speed Model)**

- *GROUP 1 for transmitter/receiver machines normally operating at C.C.I.T.T. speeds*
- *GROUP 2 for receiver only machines normally operating at C.C.I.T.T. speeds*
- *GROUP 3 for transmitter/receiver machines normally operating at American speeds*
- *GROUP 4 for receiver only machines normally operating at American speeds*

**SELECTOR UNIT S4279 (Gear Box Model)**

- *GROUP 1 for transmitter/receiver machines normally operating at C.C.I.T.T. speeds*
- *GROUP 2 for receiver only machines normally operating at C.C.I.T.T. speeds*
- *GROUP 3 for transmitter/receiver machines normally operating at American speeds*
- *GROUP 4 for receiver only machines normally operating at American speeds*

| *Index Letter* | *Part No.* | *Part Name* |
|---|---|---|
| CASTING AND DRIVE SHAFT | | |
| | 4278/1 | Selector Unit Sub Assembly *(for Selector Unit S4278)* |
| | *or* 4279/1 | Selector Unit Sub Assembly *(for Selector Unit S4279)* *includes:-* |
| A | 4009/101A | Selector Unit Casting CP *(includes machined and enamelled casting with pins driven in and with the following replaceable item)* |
| B | 4009/53 | Special Shouldered Bush |
| | 4278/26 | Starter Main Plate CP *includes:-* |
| C | 4278/25 | Mounting Bracket CP } *for these parts see Fig. 21* |
| D | 4278/22 | Starter Main Plate } |
| E | 4278/23 | Adjustment Bracket } |
| | 4009/104 | Drive Shaft Bearing CP *comprises:-* } |
| F | * BO3852/1 | Oil Impregnated Bush *(Oilite CT85 x 7/16 in.)* } |
| | 4009/103 | Drive Shaft Bearing Block CP *comprises:-* |
| G | 4009/30 | Drive Shaft Bearing Block |
| H | * BO3851/1 | Oil Impregnated Bush *(Oilite FCT68 x 1/2 in.)* |
| | 4009/105C | Drive Shaft CP *(for Selector Unit S4278)* *for machines normally operating at C.C.I.T.T. speeds* } *includes:-* |
| | *or* 4019/50 | Drive Shaft CP *(for Selector Unit S4279)* } |
| | *or* 4009/249 | Drive Shaft CP *(for Selector Unit S4278)* *for machines normally operating at American speeds* } |
| | *or* 4019/53 | Drive Shaft CP *(for Selector Unit S4279)* } |
| J | 4009/26C | Drive Shaft *(for Selector Unit S4278)* *for machines normally operating at C.C.I.T.T. speeds* |
| | *or* 4019/44 | Drive Shaft *(for Selector Unit S4279)* } |
| | *or* 4009/215A | Drive Shaft *(for Selector Unit S4278)* *for machines normally operating at American speeds* |
| | *or* 4019/52 | Drive Shaft *(for Selector Unit S4279)* } |
| K | GR4061 | Worm |
| L | 4009/181 | Bearing Collar |
| M | BO3853A | Ball Thrust Bearing *(includes Thrust Washers)* |
| N | PB4451A | Collar *(fitted to Selector Unit S4278)* |
| | *or* 4019/55 | Insert *(fitted to Selector Unit S4279)* |
| O | PN7019 | Square Nut *(fitted to Selector Unit S4278)* |
| | *or* 4019/46 | Square Nut *(fitted to Selector Unit S4279)* |

| *Index Letter* | *Part No.* | *Part Name* |
|---|---|---|
| ROCKSHAFT ASSEMBLY | | |
| P | 4009/122 | Rockshaft Bearing Bracket CP |
| Q | 4009/380 | Rockshaft Stop Arm CP *includes:-* |
| R | 4009/163 | Stop Pin |
| S | 4278/74 | Plate CP |
| T | PG7527 | Tension Spring |
| | 4278/42 | Rockshaft CP *includes:-* |
| U | 4278/43 | Rockshaft Sub CP |
| V | 4278/48 | Retention Lifting Arm CP |
| W | PW5714 | Shim *(0.005 in.)* |
| X | 4278/21 | Rockshaft Operating Arm |
| Y | 4009/65 | Retention Driving Plate |
| Z | PB2108 | Shouldered Bush |
| AA | PG5114 | Compression Spring |
| AB | PS5656 | Special Screw |
| AC | PS6549 | Anchor Bolt |
| AD | 4009/123 | LH Rockshaft Bearing Bracket CP |
| AE | 4009/135 | Lubricator CP |
| TRIPSHAFT ASSEMBLY | | |
| AF | 4009/136 | Tripshaft Bearing Bracket CP |
| AG | 4009/130A | Tripshaft CP |
| AH | 4009/16 | Trip Operating Lever Stop |
| STARTER SWITCH CONTROL | | |
| AJ | 4009/204A | Starter Support Bracket CP |
| AK | PP6826 | Starter Spindle |
| | 4009/121A | Worm Wheel CP *comprises:-* |
| AL | 4009/9A | Worm Wheel Boss |
| AM | 4009/98 | Final Worm Wheel |
| AN | 4009/29 | Friction Washer |
| AO | PN5096 | Special Nut |
| AP | 4009/379 | Starter Arm CP |
| AQ | 4009/377 | Shouldered Bush CP |
| AR | PG5149 | Compression Spring |
| AS | 4009/206 | Bearing Bracket CP |
| AT | 4009/131 | Bearing Bracket *(for Selector Unit S4278)* |
| | *or* 4019/4 | Bearing Bracket *(for Selector Unit S4279)* |
| AU | 4000/6 | Trip Shaft CP } *These items do not form part of these units and are assembled at the Machine Sub-Assembly Stage* |
| AV | 4000/4A | Starter Trip Lever CP } |
| AW | CS1030 | Set Collar and Screw *(2 per assembly)* } |
| SINGLE CURRENT BIAS ADJUSTMENT | | |
| AX | 4009/125 | Spring Anchor Strip CP |
| AY | PG7551 | Tension Spring *(2 per unit)* |
| AZ | 4009/152 | Guide Plate CP |
| DRIVING GEARS *(see page 49 and Fig. 22)* | | |
| BA | PS6123 | Special Screw |
| SEND/RECEIVE CLUTCH MECHANISM | | |
| | 4009/269 | Final Worm and Clutch Drum Spindle *(used on S4278 and S4279 Groups 2 and 4)* |
| | *or* 4009/274 | Crawler Clutch CP *(used on S4278 and S4279 Groups 1 and 3) includes:-* |
| BB | 4009/273 | Worm and Drum Spindle CP |
| BC | 4009/271 | Roller Ratchet Drum |
| BD | PG3277 | Roller Ratchet Spring |
| BE | RL1241 | Roller |
| BF | 4009/272 | Connecting Link |
| BG | PW5409 | Shim *(0.003 in.) 2 max* |
| | *or* PW5491 | Shim *(0.005 in.) 4 max* |
| BH | 4009/165A | Link } *used on S4278 and S4279 Groups 1 and 3* |
| BJ | PS5696A | Shouldered Screw } |
| BK | PN5108 | Special Nut } |

* *Customers without facilities for pressing these bushes into the housings should order the complete CP's*

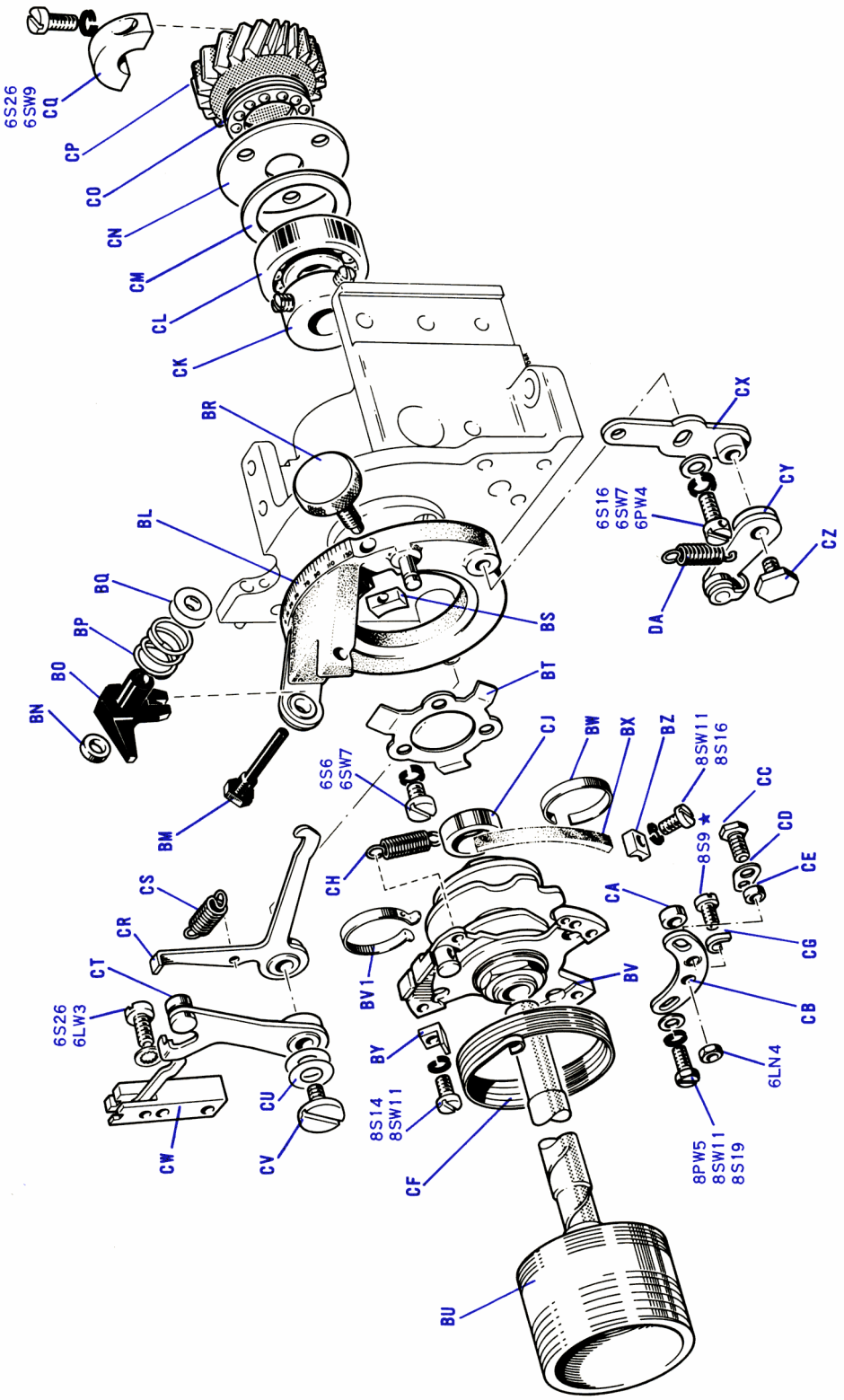


FIG. 7.20 SELECTOR UNITS S4278 AND S4279

## SELECTOR UNIT S4278 and S4279 (Continued)

| *Index Letter* | *Part No.* | *Part Name* |
|---|---|---|
| *NOTE:- Items BL to CQ form part of the Selector Unit Sub-Assembly* | | |
| ORIENTATION DEVICE | | |
| | 4278/62 | Orientation CP *includes:-* |
| BL | 4278/61 | Orientation Casting CP |
| BM | PS5125 | Special Screw |
| BN | PB4459 | Collar |
| BO | 4009/7A | Detent |
| BP | PG5113 | Compression Spring |
| BQ | PW5682 | Shim Washer *(0.003 in.) 8 max, quantity* |
| BR | PS6228 | Knurled Head Screw |
| BS | 4009/52 | Clamp Shoe |
| BT | 4009/20 | Spring Washer |
| SELECTOR CAMSHAFT | | |
| | 4278/49 | Selector Clutch Assembly CP *includes:-* |
| BU | 4278/68 | Selector Camshaft |
| BV | 4278/70 | Selector Camsleeve CP *includes:-* |
| BV1 | 4009/221B | Spring Clip |
| BW | 4009/75 | Clip |
| BX | PF1121 | Felt Lubrication |
| BY | 4278/11 | Spring Guide *(3 per CP)* |
| BZ | 4278/12 | Clamp Block |
| CA | PW5876 | Spacer *(2 per CP)* |
| CB | 4278/3 | Adjustment Plate CP |
| CC | PS5183 | Special Screw |
| CD | 4278/14 | Clamp Plate |
| CE | PB5056 | Collar |
| CF | 4278/17 | Selector Clutch Band |
| CG | 4278/50 | Clutch Band Clamp |
| CH | PG7672 | Tension Spring |
| CJ | PB4687 | Spring Collar |
| CK | 4009/378 | Collar |
| CL | BO2874 | Ballrace *(BS292 Ref.BRL008)* |
| CM | PW5738 | Special Washer |
| CN | 4009/67A | Camshaft Thrust Plate |
| CO | BO3854/2 | Ball Thrust Bearing *(BS292 SFE 5/16)* |
| CP | 4009/161B | Camshaft Gear CP *(C.C.I.T.T. Speed)* } *includes:-* |
| | *or* 4009/213A | Camshaft Gear CP *(American Speed)* } |
| CQ | 4009/180A | Clamp |
| RETENTION AND STRIKER LEVERS | | |
| CR | 4009/139 | Retention Locking Lever CP |
| CS | PG7447 | Tension Spring |
| CT | 4009/138A | Striker Lever CP |
| CU | PW5681 | Shim Washer *(0.003 in.) 4 max, quantity as required* |
| CV | PS5392 | Special Screw |
| CW | 4009/124A | Retention Arm CP |
| CX | 4009/133A | Retention Lever Adjustment Arm CP |
| CY | 4009/141B | Retention Lever CP |
| CZ | PS5126 | Special Screw |
| DA | PG7446A | Tension Spring |

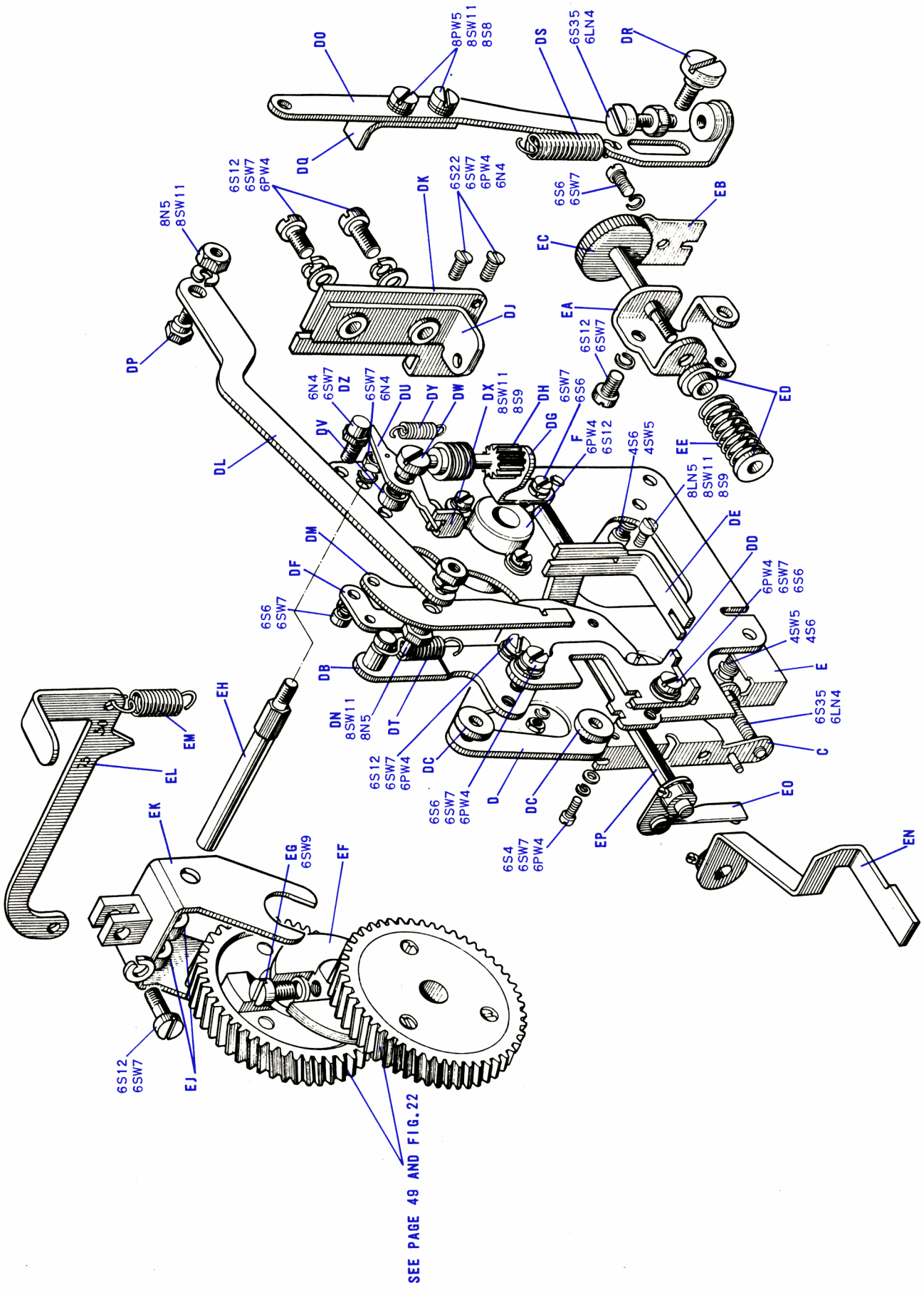


FIG. 7.21 SELECTOR UNITS S4278 AND S4279

## SELECTOR UNIT S4278 and S4279 (Continued)

| *Index Letter* | *Part No.* | *Part Name* |
|---|---|---|
| STARTER SWITCH CONTROL | | |
| DB | 4009/277 | Starter Support Plate CP |
| DC | PB4450 | Spacing Collar *(3 per assembly)* |
| DD | 4009/33 | Starter Lever Stop Bracket |
| DE | 4009/34 | Guide Bracket |
| DF | 4009/189 | Starter Pivot Bracket |
| DG | 4009/59 | Worm Spindle Bearing |
| DH | 4009/92 | Worm Spindle |
| DJ | 4009/211 | Worm Bearing Bracket CP |
| DK | 4009/144A | Starter Lever Guide Bracket CP |
| | 4009/127 | Starter Lever CP *includes:-* |
| DL | 4009/31 | Starter Lever |
| DM | 4009/62 | Starter Operating Link |
| DN | PP8962 | Flanged Pin |
| DO | 4009/126 | Switch Operating Link CP |
| DP | PS5124 | Special Screw |
| DQ | 4009/66 | Holdout Release Bracket |
| DR | PS5654 | Special Screw |
| DS | PG7444 | Tension Spring |
| DT | PG7445 | Tension Spring |
| DU | 4009/24 | Starter Holdout Lever |
| DV | PB4454 | Spacing Collar |
| DW | PS5655 | Special Screw |
| DX | 4009/58 | Guide Bracket |
| DY | PG7448 | Tension Spring |
| DZ | EC1574 | Eccentric |
| SINGLE CURRENT BIAS ADJUSTMENT | | |
| EA | 4009/45 | Adjustment Screw Bracket |
| EB | 4009/85 | Clamp |
| EC | 4009/132 | Adjustment Screw CP |
| ED | PB4440 | Shouldered Bush *(2 per CP)* |
| EE | PG5115 | Compression Spring |
| GEAR CHANGE MECHANISM *(fitted to S4279)* | | |
| EF | 4019/11C | Dog |
| EG | PS6123 | Special Screw |
| EH | PP7950 | Shouldered Pin |
| EJ | CS1044 | Set Collar and Screw *(2 per unit)* |
| EK | 4019/12 | Gear Change Fork CP |
| EL | 4019/15 | Gear Lever *(for machines fitted with 45 and 50 baud gears)* |
| | *or* 4019/19 | Gear Lever *(for machines fitted with 50 and 75 baud gears)* |
| | *or* 4019/29 | Gear Lever *(for machines fitted with 50 and 56 baud gears)* |
| | *or* 4019/33 | Gear Lever *(for machines fitted with 56 and 75 baud gears)* |
| | *or* 4019/34 | Gear Lever *(for machines fitted with 45 and 74 baud gears)* |
| EM | PG7488 | Tension Spring |
| ARMATURE KNOCK OUT LINK | | |
| EN | 4009/382 | Lever CP |
| EO | 4009/381 | Armature Knock Out Link CP |
| EP | 4009/156A 1 | Send and Receive Delay Lever CP |

DRIVING GEARS *(See page 49 and Fig. 22)*

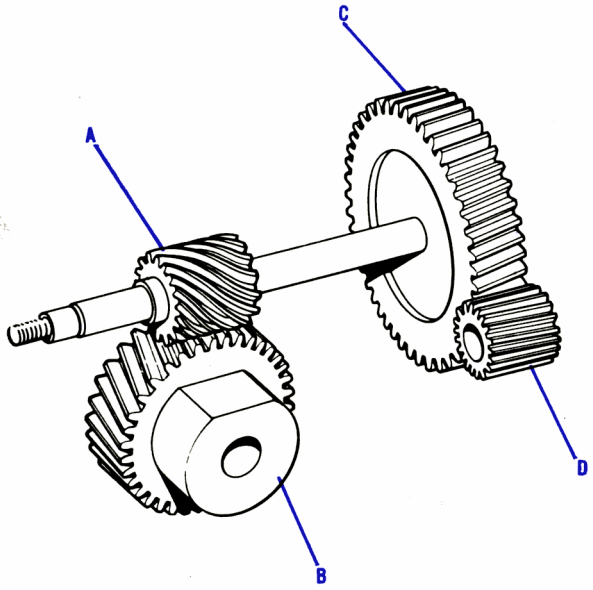


USED WITH
SINGLE SPEED SELECTOR UNIT S4278

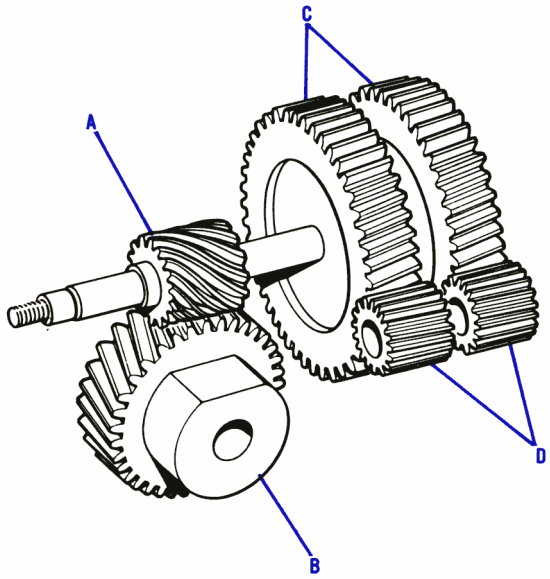


USED WITH
GEAR BOX SELECTOR UNIT S4279

FIG. 7.22 MODEL 75 DRIVE GEARS

| | | | INDEX LETTER | MACHINES FITTED WITH A GOVERNED MOTOR | | | | | MACHINES FITTED WITH A 50 CYCLES SYNCHRONOUS MOTOR | | | | | MACHINES FITTED WITH A 60 CYCLES SYNCHRONOUS MOTOR | | | | |
|---|---|---|---|---|---|---|---|---|---|---|---|---|---|---|---|---|---|---|
| | | | | BAUD SPEED AND COLOUR CODE | | | | | BAUD SPEED AND COLOUR CODE | | | | | BAUD SPEED AND COLOUR CODE | | | | |
| | | | | 45 | 50 | 56 | 74 | 75 | 45 | 50 | 56 | 74 | 75 | 45 | 50 | 56 | 74 | 75 |
| | | | | GREEN | YELLOW | BLACK | RED | BLUE | YELLOW / GREEN | YELLOW / RED | | | YELLOW / BLUE | | BLACK / ORANGE | | | BLACK / BLUE |
| For machines normally operating at C.C.I.T.T. speeds | machines fitted with a Single Speed SELECTOR UNIT S4278 | Drive Shaft | A | 4009/26C | 4009/26C | 4009/26C | 4009/26C | 4009/26C | 4009/26C | 4009/26C | | | 4009/26C | | 4009/26C | | | 4009/26C |
| | | Cam Shaft Gear | B | 4009/161B | 4009/161B | 4009/161B | 4009/161B | 4009/161B | 4009/161B | 4009/161B | | | 4009/161B | | 4009/161B | | | 4009/161B |
| | | Driven Gear | C | 4009/93A | 4009/94A | 4009/199A | 4009/222 | 4009/95A | 4009/369 | 4009/251 | | | 4009/356 | | 4009/358 | | | 4009/365 |
| | | Motor Pinion | D | GR2199 | GR2198 | GR2223 | GR2228 | GR2201 | GR2272 | GR2238 | | | GR2270 | | GR2267 | | | GR2273 |
| | machines fitted with a Gear Box SELECTOR UNIT S4279 | Drive Shaft | A | 4019/3C | 4019/3C | 4019/3C | | 4019/3C | 4019/3C | 4019/3C | | | 4019/3C | | | | | |
| | | Cam Shaft Gear | B | 4009/161B | 4009/161B | 4009/161B | | 4009/161B | 4009/161B | 4009/161B | | | 4009/161B | | | | | |
| | | Driven Gear | C | 4019/6A | 4019/7A | 4019/27 | | 4019/17A | 4019/37 | 4019/38 | | | 4019/39 | | | | | |
| | | Motor Pinion | D | GR2207 | GR2208 | GR2261 | | GR2221 | GR2268 | GR2269 | | | GR2271 | | | | | |
| For machines normally operating at American speeds | machines fitted with a Single Speed SELECTOR UNIT S4278 | | | | | | | | | | | | | PINK | ORANGE | BROWN | WHITE | VIOLET |
| | | Drive Shaft | A | | | | | | | | | | | 4009/215A | 4009/215A | 4009/215A | 4009/215A | 4009/215A |
| | | Cam Shaft Gear | B | | | | | | | | | | | 4009/213A | 4009/213A | 4009/213A | 4009/213A | 4009/213A |
| | | Driven Gear | C | | | | | | | | | | | 4009/218A | 4009/226 | 4009/224 | 4009/216A | 4009/248 |
| | | Motor Pinion | D | | | | | | | | | | | GR2225A | GR2230 | GR2229 | GR2224A | GR2237 |
| | machines fitted with a Gear Box SELECTOR UNIT S4279 | Drive Shaft | A | | | | | | | | | | | 4019/35 | | 4019/35 | 4019/35 | |
| | | Cam Shaft Gear | B | | | | | | | | | | | 4009/213A | | 4009/213A | 4009/213A | |
| | | Driven Gear | C | | | | | | | | | | | 4019/30 | | 4019/32 | 4019/31 | |
| | | Motor Pinion | D | | | | | | | | | | | GR2262 | | GR2264 | GR2263 | |

## MODEL 75 DRIVE GEARS

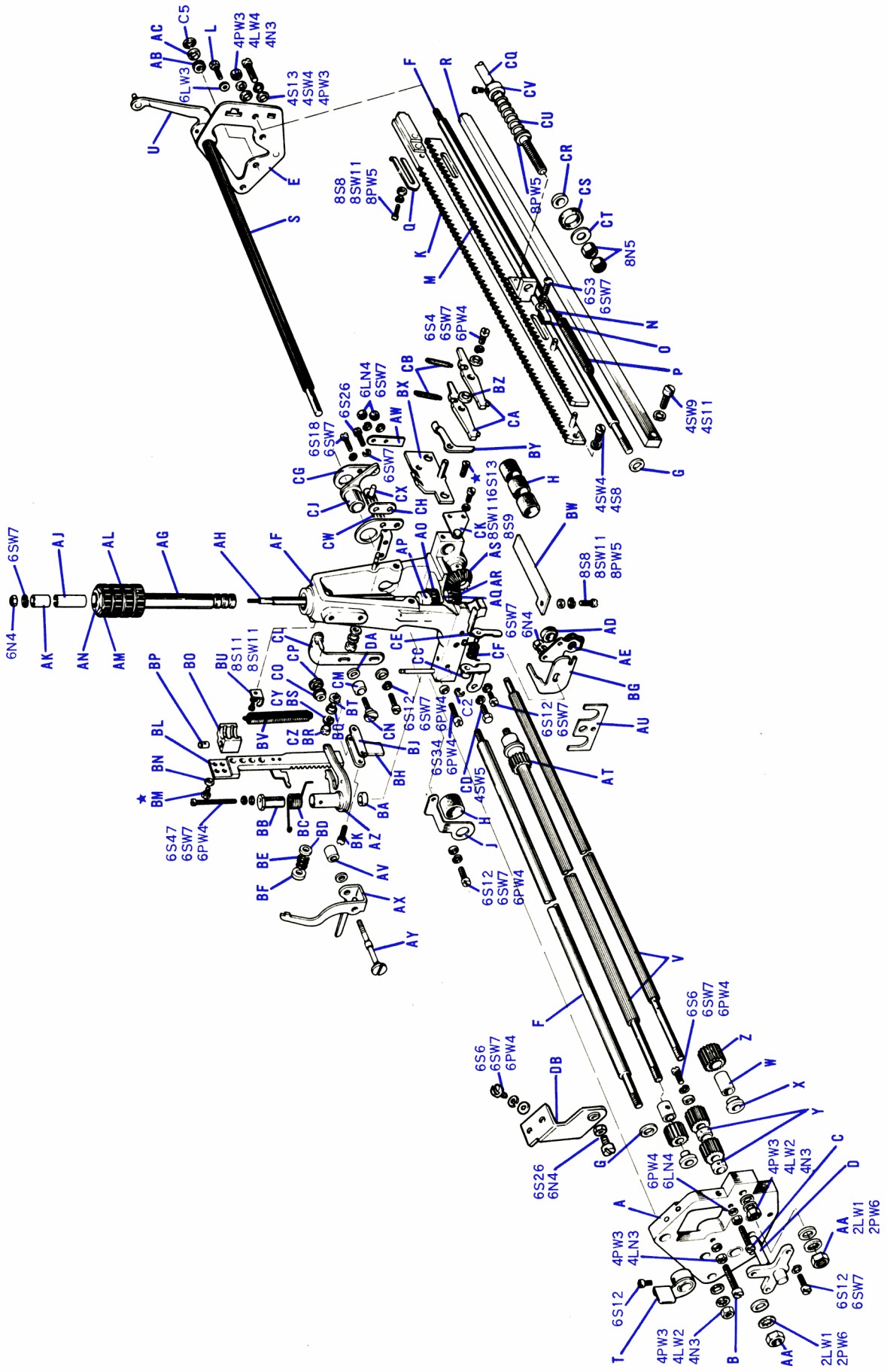


FIG. 7.23 TYPEHEAD CARRIAGE UNIT S4002

## TYPEHEAD CARRIAGE UNIT S4002

*GROUP 1 for use with Friction Feed Platen Unit*
*GROUP 2 for use with Sprocket Feed Platen Unit*

| Index Letter | Part No. | Part Name |
|---|---|---|
| | | END CASTING AND GUIDE RAILS |
| A | 4002/55 | End Casting CP *(used on Group 1)* |
| | *or* 4002/138 | End Casting CP *(used on Group 2)* |
| B | PS6608 | Special Screw *(carriage stop for 0.5 to 0.8 in. margin)* |
| | *or* PS5459 | Special Screw *(carriage stop for 0.9 in. margin)* |
| | *or* PS5458 | Special Screw *(carriage stop for 76 character line)* |
| C | PS2205 | Screw 6BA x 13/16 in. Ch. Hd. *(carriage stop for 0.5 to 0.8 in. margin)* |
| | *or* PS2237 | Screw 6BA x 15/16 in. Ch. Hd. *(carriage stop for 0.9 in. margin)* |
| | *or* PS2141 | Screw 6BA x 9/16 in. Ch. Hd. *(carriage stop for 76 character line)* |
| D | 4002/46A | Bearing Plate CP |
| E | 4002/53 | End Plate CP *(used on Group 1)* |
| | *or* 4002/136 | End Plate CP *(used on Group 2)* |
| F | 4002/66A | Guide Rail *(2 per unit)* |
| G | PW5742 | Special Washer *(2 per unit)* |
| H | PF1127 | Lubricating Collar *(felt) 4 per unit* |
| J | 4002/30 | Guide Rail Oiler Retainer *(this item forms part of 4002/11)* |
| | | FEED RETENTION RACKS AND PRINT RAIL |
| K | 4002/59 | Retention Rack CP *(used on Group 1)* |
| | *or* 4002/133 | Retention Rack CP *(used on Group 2)* |
| L | PS5180 | Bolt Thin Headed |
| M | 4002/62A | Feed Rack CP |
| N | 4002/69 | Rack Retainer } *2 off each per unit* |
| O | PF1130 | Lubricating Pad *(felt)* } *2 off each per unit* |
| P | PG7452 | Tension Spring |
| Q | 4002/70 | Line Length Operating Stop |
| R | 4002/65 | Print Rail |
| | | SPLINE SHAFT AND SPUR GEARS |
| S | 4002/64 | Carriage Return Splined Shaft |
| T | 4002/50B | Carriage Return Manual Lever CP |
| U | 4002/48 | Carriage Return Link Arm CP |
| V | 4002/63 | Typehead Splined Shaft } |
| W | PB4515 | Collar } *2 off each per unit* |
| X | PB4511 | Flanged Bush } *2 off each per unit* |
| Y | PB4516 | Collar } |
| Z | GR1035 | Spur Gear *(4 per unit)* |
| AA | PN5099 | Special Nut *(2 per unit)* |
| AB | PF1142 | Lubricating Washer *(2 per unit)* |
| AC | PW5053 | Special Washer |
| AD | PF1133 | Lubricating Washer |
| AE | 4002/31 | Splined Shaft Oiler Retainer *(this item forms part of 4002/11)* |
| | | TYPEHEAD CARRIAGE |
| | 4002/12 | Typehead Carriage CP *includes:-* |
| | 4002/11 | Typehead Carriage and Casting CP *includes:-* |
| AF | 4002/7A | Typehead Carriage Casting CP |
| | 4002/4 | Typehead Boss and Sleeve CP *includes:-* |
| AG | 4002/2 | Typehead Sleeve |
| AH | 4002/10 | Typehead Spindle |
| AJ | PF1131 | Lubricating Strip |
| AK | PB4514 | Bush |
| AL | * 4002/77 | Typehead Boss CP *includes:-* |
| | 4002/1 | Typehead Boss |
| | 4002/3 | Type Pad *(specify character when ordering)* |
| AM | PW5698 | Special Washer |
| AN | PN5100 | Special Nut |
| | | CORRECTOR MECHANISM AND BEVEL GEARS |
| AO | † 4002/9 | Corrector Wheel CP |
| AP | 23923A | Taper Pin |
| AQ | PW5699 | Shim Washer *(0.003 in.) as required* |
| AR | † GR5004 | Bevel Gear |
| AS | GR5005 | Bevel Gear |
| AT | GR1036 | Spur Gear |
| AU | 4002/32 | Gear Retainer |
| AV | PB4523 | Spacing Collar *(2 per CP)* |
| AW | 4002/39 | Carriage Dashpot Extension |
| AX | 4002/33A | Corrector Bellcrank |
| AY | PS7106 | Special Screw |
| AZ | 4002/27 | Corrector Lever CP |
| BA | PB4524 | Collar |
| BB | EC5076 | Eccentric |
| BC | PG3176 | Torsion Spring |
| BD | PW5694 | Special Washer |
| BE | PG5117 | Compression Spring |
| BF | PW5695A | Special Washer |
| BG | 4002/34 | Bellcrank Stop |
| | | TYPEHEAD LIFT MECHANISM |
| BH | 4002/35 | Backing Plate |
| BJ | 4002/71 | Shim *(0.003 in.) as required* |
| BK | PS7107 | Special Screw |
| BL | 4002/25A | Lifting Link CP |
| BM | PS5413 | Special Hex. Hd. Screw |
| BN | PW5855 | Special Washer |
| BO | 4002/36A | Lifting Block |
| BP | 4002/78 | Lifting Block Nut |
| BQ | ‡ RL1179 | Roller |
| BR | ‡ PS5660 | Special Screw |
| BS | ‡ PW5737 | Shim *(0.003 in.) as required* |
| BT | PW5743 | Special Washer |
| BU | 4002/37A | Spring Anchor |
| BV | PG7454B | Tension Spring |
| | | TYPEHEAD FEED AND CARRIAGE RETURN MECHANISM |
| BW | 4002/43 | Buffer Plate |
| BX | 4002/15 | Pawl Support Plate CP |
| BY | 4002/44 | Line Length Operating Lever |
| BZ | PW5692 | Special Washer |
| CA | 4002/42 | Typehead Carriage Pawl *(2 per CP)* |
| CB | PG7514A | Tension Spring *(2 per CP)* |
| CC | 4002/17 | Pawl Latch Bracket CP |
| CD | PS5129 | Special Screw *(for typehead stop)* |
| CE | 4002/19 | Pawl Latch CP |
| CF | PG3175 | Torsion Spring |
| CG | 4002/40 | Carriage Return Lever Retainer *(2 per CP)* |
| CH | 4002/41 | Retainer Spacer |
| CJ | 4002/29 | Carriage Return Lever CP |
| CK | 4002/76A | Tape Retainer CP |
| | | JUMPER ARM |
| CL | ‡ 4002/22 | Jumper Arm CP |
| CM | RL1181 | Roller |
| CN | PS5659 | Shouldered Screw |
| CO | RL1180A | Roller } *these items are assembled at the* |
| CP | PF1174 | Lubricating Washer } *machine sub-assembly stage* |
| | | CARRIAGE LINK *(these items are assembled at the machine sub-assembly stage)* |
| CQ | 4002/67 | Carriage Link |
| CR | 4002/68 | Link End Piece } |
| CS | PF1128 | Lubricating Washer } *2 off each per unit* |
| CT | PW5693 | Special Washer } |
| CU | PG5159 | Compression Spring |
| CV | CS1107 | Set Collar and Screw |
| | | AUTOMATIC CARRIAGE RETURN AND LINE FEED |
| | | *The following parts are only fitted to machines with the automatic carriage return and line feed facility* |
| | 4002/72 | Carriage Extension CP *includes:-* |
| CW | 4002/73 | Carriage Extension |
| CX | PP9185A | Flanged Pin |
| | | TWO COLOUR PRINTING PARTS ON TYPEHEAD |
| | | *The following parts are only fitted to machines with the two colour printing facility* |
| CY | ‡ PW5759 | Shim *(3 max.)* |
| CZ | ‡ PS5693 | Shouldered Screw |
| DA | ‡ PW5529 | Spacing Washer |
| | | *The following part is only fitted to GROUP 2 units* |
| DB | 4002/134 | Bracket |

* *This item is assembled with types and customers must state the layout required when ordering as a spare part*

† *Customers must be prepared to drill and line ream these parts when ordered as spares*

‡ *Parts CZ and CY replace parts BR, BS and BQ and part DA replaces part CL*

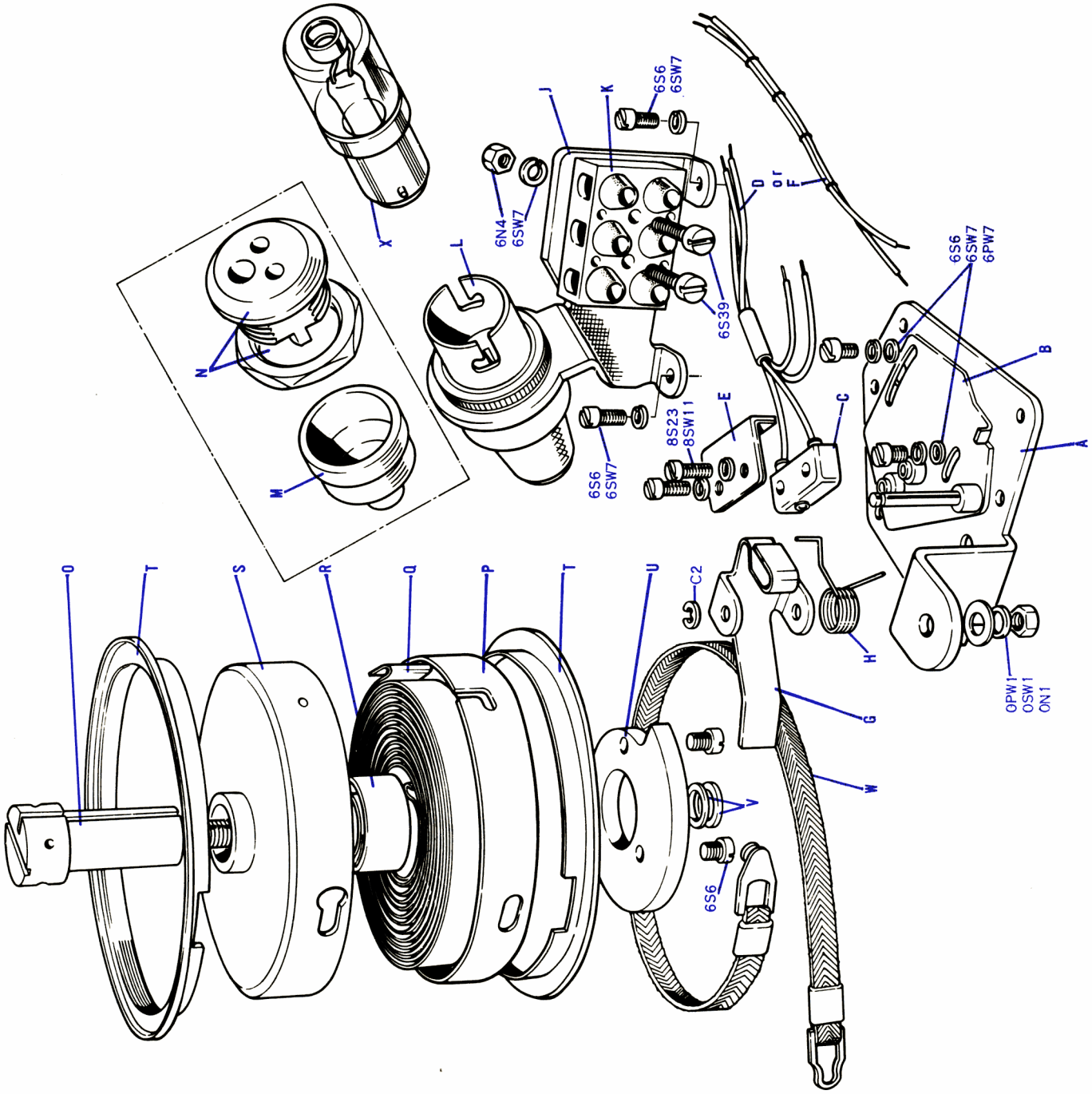


FIG. 7.24 SPRING DRUM AND END OF LINE INDICATOR S4277

## SPRING DRUM AND END-OF-LINE INDICATOR UNIT S4277

*GROUP 1 for send/receive machines with keyboard and with, or without reperforating attachment*
*GROUP 2 for receiver machines only*
*GROUP 3 for machines used in silencing cover*
*GROUP 4 for receiver only machines with reperforating attachment*

| *Index Letter* | *Part No.* | *Part Name* |
|---|---|---|
| A | 4277/1 | End-Of-Line Indicator Mounting Bracket |
| B | 4277/9 | Switch Bracket CP *(used on Groups 1 and 3 only)* |
| | 4277/19 | Microswitch and Cableform CP *includes:-* } *used on Groups 1 and 3 only* |
| C | BO 3993/2 | Microswitch *(Honeywell 11SMI-T-N1)* |
| D | CF2260 | Cableform CP |
| E | 4277/10 | Microswitch Cover CP |
| F | CF1919 | Cableform *(used on Group 4 only)* |
| G | 4277/12 | Cam Follower Arm *(used on Groups 1 and 3 only)* |
| H | PG3317A | Return Spring *(used on Groups 1 and 3 only)* |
| J | 4277/2A | E.O.L.I. Lamp Bracket *(used on Groups 1, 3 and 4 only)* |
| K | CB1143 | 3-way Terminal Block *(used on Groups 1, 3 and 4 only)* |
| L | BO 3805/1 | Lamp Holder *(S.B.C.) used on Groups 1 and 4 only)* |
| M | 4013/37 | Insulating Cup } *used on Group 3 only* |
| N | 4013/38 | Modified Socket *(3-way)* } *used on Group 3 only* |
| | 4277/17 | Spring Drum CP *includes:-* |
| O | PS7184 | Spring Drum Pivot |
| P | 4277/6 | Inner Half Spring Drum CP |
| Q | PG1503 | Carriage Spring |
| R | 4005/4 | Spring Anchor |
| S | 4277/7 | Outer Half Spring Drum CP |
| T | 4277/8 | Spring Drum Flange *(2 per CP)* |
| U | 4277/11 | Cam |
| V | PW5277 | Shim *(0.005 in.) quantity as required* |
| W | 4277/18 | Carriage Return Tape CP |
| X | BO 3804 | Neon Indicator Lamp *(S.B.C., 0.5W) state voltage when ordering* |

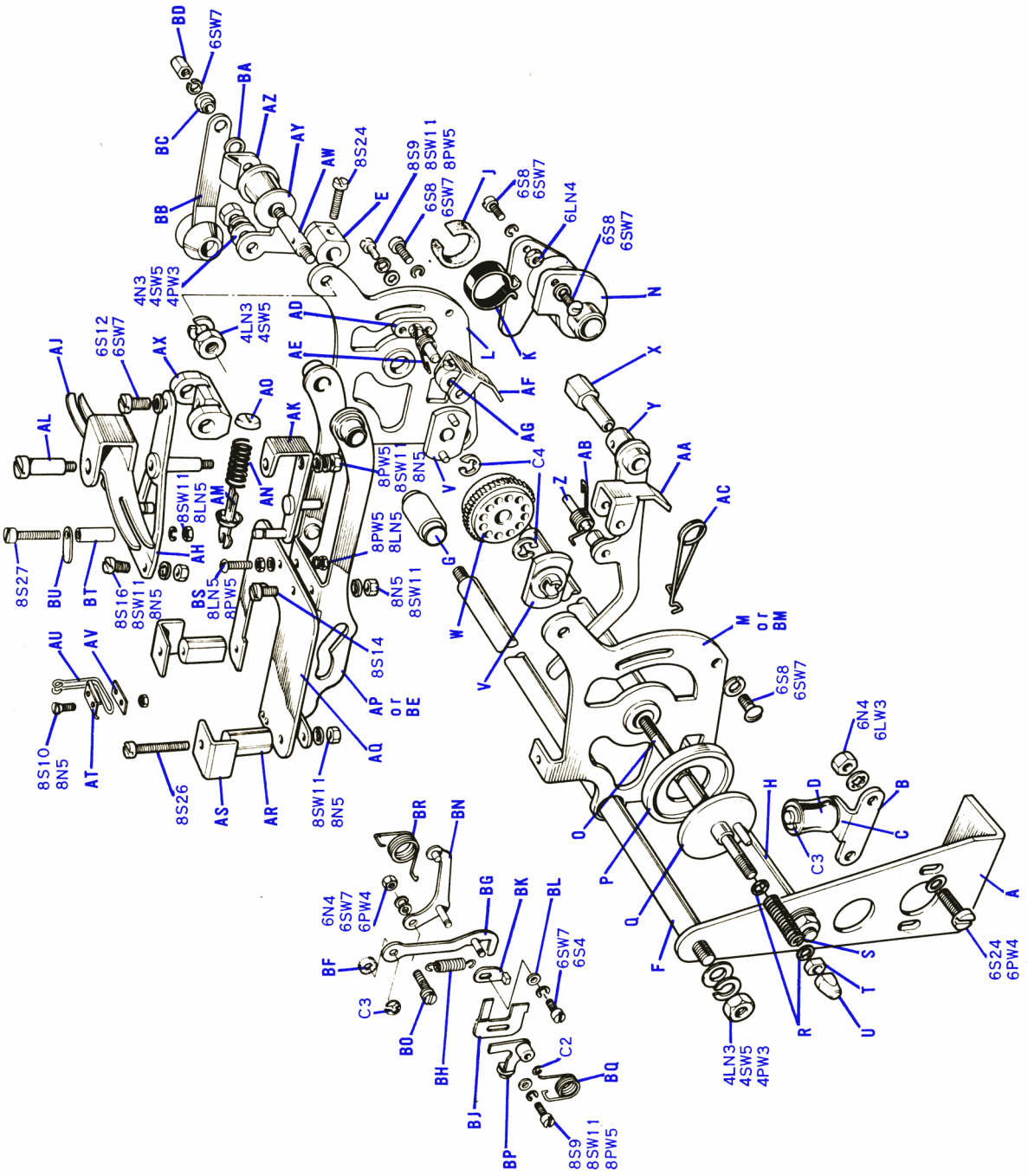


FIG. 7.25 RIBBON UNIT S4001C

# RIBBON UNIT S4001C

| *Index Letter* | *Part No.* | *Part Name* |
|---|---|---|
| TRACKRAILS AND BRACKETS | | |
| A | 4001/8 | Trackrail Bracket (LH) |
| | 4001/70A | Bracket and Roller CP *includes:-* |
| B | 4001/34B | Carriage Return Tape Roller Bracket CP |
| C | PW5642 | Shim *(0.005 in.) 4 max, quantity as required* |
| D | RL1246 | Carriage Return Tape Roller |
| E | 4001/36 | Trackrail Bracket (RH) CP |
| F | 4001/5 | Upper Ribbon Unit Trackrail |
| G | 4001/3A | Double Shoulder Bush |
| H | 4001/6 | Lower Ribbon Unit Trackrail |
| J | PF1173 | Felt Oiling Strip |
| K | 4001/82 | Retaining Clip |
| SIDE PLATES AND MAINSHAFT COMPONENTS | | |
| L | 4001/88A | Side Plate (RH) CP |
| M | * 4001/87 | Side Plate (LH) CP |
| N | 4001/89 | Lower Bearing CP |
| O | 4001/74 | Ribbon Unit Shaft |
| P | PW5802 | Spool Damping Washer } *2 off each per CP* |
| Q | 4001/76 | Spool Drive Plate CP } |
| R | PW5803 | Friction Washer *(8 per CP)* |
| S | PG5157 | Compression Spring *(2 per CP)* |
| T | PN6038 | Special Nut } |
| U | PN6037 | Special End Nut } *2 off each per CP* |
| V | 4001/47 | Ratchet Coupling CP } |
| W | 4001/11 | Ribbon Unit Ratchet |
| RIBBON FEED MECHANISM | | |
| X | 4001/24 | Feed Lever Pivot |
| | 4001/42 | Ribbon Feed Lever CP *includes:-* |
| Y | 4001/41 | Ribbon Feed Lever Sub CP |
| Z | PP1097 | Parallel Pin |
| AA | 4001/25A | Ribbon Feed Pawl |
| AB | PG3167C | Feed Pawl Spring |
| AC | PG3169 | Feed Lever Spring |
| AD | 4001/49 | Retention Pawl Plate CP |
| AE | PG3168B | Retention Pawl Spring |
| AF | 4001/25A | Ribbon Unit Pawl |
| AG | CS1015 | Set Collar and Screw |
| RIBBON FEED CHANGE | | |
| AH | 4001/46A | Top Plate CP |
| AJ | 4001/43 | Ribbon Change Lever CP |
| AK | 4001/45 | Feed Change Lever CP |
| AL | PS5651 | Change Arm Pivot |
| AM | 4001/30 | Bias Spring Support |
| AN | PG5112 | Change Over Bias Spring |
| AO | 4001/31 | Spring Cup *(2 per CP)* |
| RIBBON JUMPER AND ROLLERS | | |
| AP | * 4001/38B | Jumper Sub CP |
| AQ | 4001/103 | Ribbon Guide Base Plate |
| AR | 4001/100 | Pillar *(2 per CP)* |
| AS | 4001/102 | Ribbon Retainer *(2 per CP)* |
| AT | 4001/101 | Keep Plate |
| AU | 4001/104 | Ribbon Guide |
| AV | 4001/108 | Keep Plate |
| AW | 4001/97 | Ribbon Roller Pivot *(2 per CP)* |
| AX | 4001/96 | Tie Bar |
| AY | RL1169B | Ribbon Roller } |
| AZ | 4014/115 | Tape Retainer } |
| BA | PW5676A | Special Spring Washer } *2 off each per CP* |
| BB | 4001/79A | Spool Retainer CP } |
| BC | 4001/98 | Bush } |
| BD | 4001/95 | Special Nut } |
| TWO COLOUR PRINTING PARTS ON RIBBON UNIT | | |
| *The following parts are only fitted to machines with the two colour printing facility* | | |
| BE | * 4001/66A | Ribbon Jumper Sub CP |
| BF | PF1115 | Lubricating Washer |
| BG | 4001/61 | Lift Link CP |
| BH | PG7488 | Tension Spring |
| BJ | 4001/59 | Lift Link Stop |
| BK | 4001/60 | Lift Link Upper Stop |
| BL | PW5674 | Special Washer |
| BM | * 4001/94 | LH Side Plate CP |
| BN | 4001/57 | Ribbon Lift Lever CP |
| BO | EC1596 | Eccentric |
| BP | 4001/68 | Roller Arm CP |
| BQ | PG3235 | Torsion Spring |
| BR | PG3236 | Torsion Spring |
| BS | PS6146 | Special Screw |
| BT | PB5011 | Bush |
| BU | 4001/107 | Plate |

* *Parts* BE *and* BM *replace parts* AP *and* M *respectively*

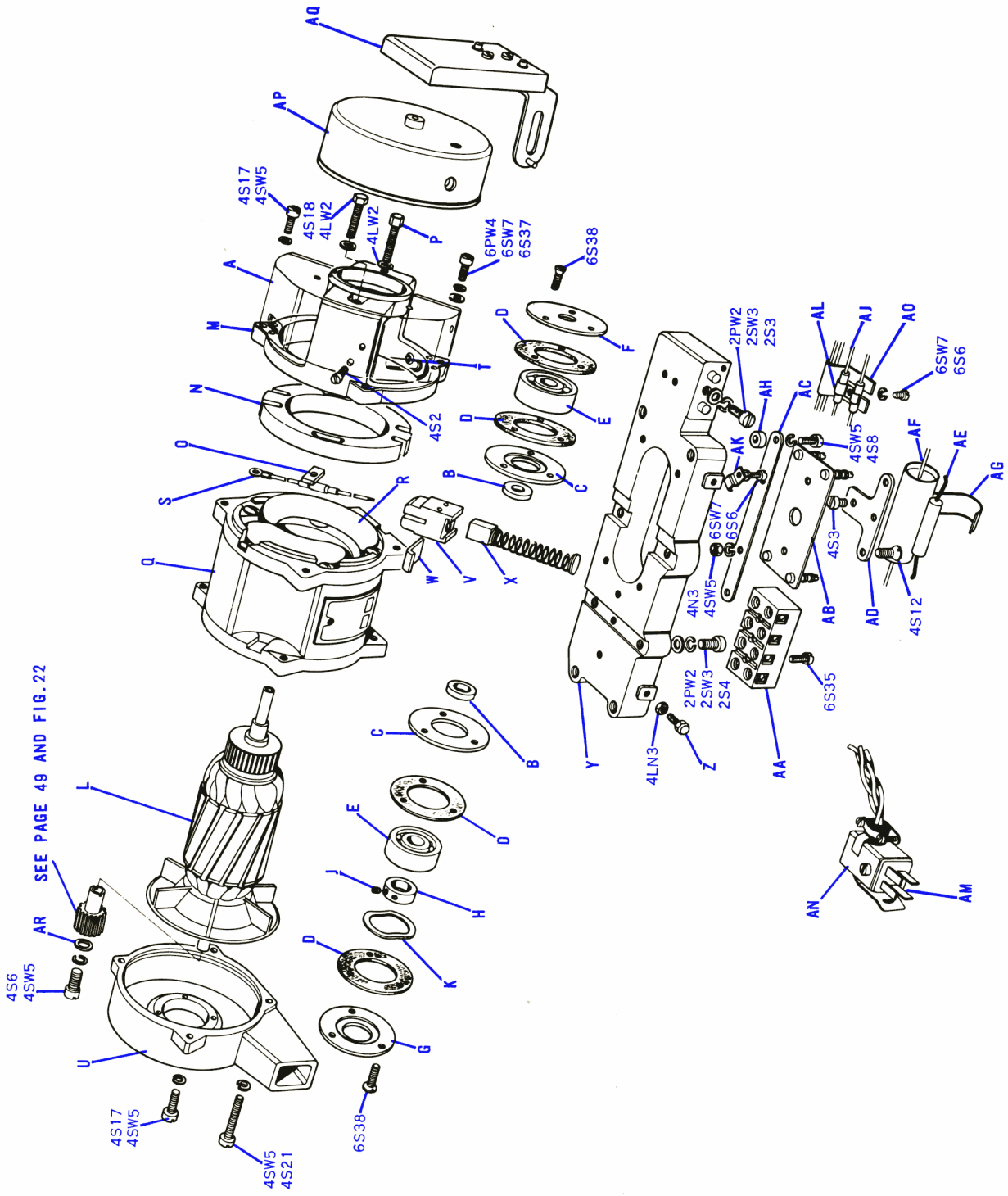


FIG. 7.26 GOVERNED MOTOR UNIT S4282

## GOVERNED MOTOR UNIT S4282

| Index Letter | Part No. | Part Name |
|---|---|---|
| | REP522A | Motor *(Mains voltage and frequency to be specified) includes:-* |
| A | 4040/79 | Brush Box Cover CP |
| | 4040/132 | Motor CP *includes:-* |
| | 4040/116 | Armature CP *includes:-* |
| B | 4040/30 | Thrust Collar } *2 of each per CP* |
| C | 4040/37 | Bearing Clamp Plate } |
| D | 4040/31 | Gasket *(4 per CP)* |
| E | BO 8403/1 | Journal Bearing *(BS.292 Ref.BRL009) 2 per CP* |
| F | 4040/13 | Bearing Cap *(Commutator End)* |
| G | 4040/14 | Bearing Cap *(Fan End)* |
| H | 4040/12 | Bearing Retaining Washer |
| J | PS5924 | Special Screw |
| K | 4040/32 | Special Washer |
| L | 4040/92 | Armature |
| | 4040/131 | Commutator End Cover and Body CP *includes:-* |
| | 4040/129 | Commutator End Cover CP *includes:-* |
| M | 4040/128 | Commutator End Cover |
| N | 4040/100 | Brush Mounting Plate |
| O | 3905/10 | Special Nut *(2 per CP)* |
| P | PS5176 | Special Screw |
| | 4040/130 | Field Magnet CP *includes:-* |
| Q | 4040/85B | Field Magnet Sub CP |
| R | 4040/126 | Field Coil CP *(2 per CP)* |
| S | CF2177 | Inductor CP *(2 per CP)* |
| T | PE1078 | Grommet |

| Index Letter | Part No. | Part Name |
|---|---|---|
| U | 4040/71 | Fan End Cover |
| V | 4040/99 | Brush Box } *2 of each per CP* |
| W | 4040/101 | Brush Slide } |
| X | AA16/1 | Motor Brush CP |
| Y | 4282/4 | Motor Base |
| Z | PS5032 | Special Screw *(3 per unit)* |
| AA | CB1028 | Connecting Block *(4 section)* |
| | 4282/1 | Resistor Board CP *includes:-* |
| AB | 2942/14 | Resistor Board Sub CP |
| AC | 4018/14 | Mounting Strip |
| AD | 4018/15A | Mounting Bracket |
| AE | BO 2878/2 | Resistor 3.5 ohms, ± 5% 4.5W |
| | 4282/5 | Capacitor CP *includes:-* |
| AF | BO 2659 | Capacitor 0.1 μF 1500V *peak* |
| AG | PK1153 | Capacitor Clip |
| AH | PB4499 | Bush *(2 per unit)* |
| AJ | 4282/2 | Inductor CP |
| AK | PK2029 | Cable Clip |
| AL | PK1202 | Inductor Clip |
| | 4282/3 | Plug Assembly CP *includes:-* |
| AM | BO 7601/2 | 4-way Plug *(Painton Inner Assy.P4)* |
| AN | BO 7601/8 | Side Entry Cover *(Painton Cover Assy.4/CS/R1E)* |
| AO | PK1170 | Cable Clip |
| AP | S4012 | Governor Unit *(See page 59)* |
| AQ | 4282/6 | Governor Contacts CP *(See page 59)* |
| MOTOR PINION *(See page 49 and Fig.22)* | | |
| AR | PW5716 | Special Washer |

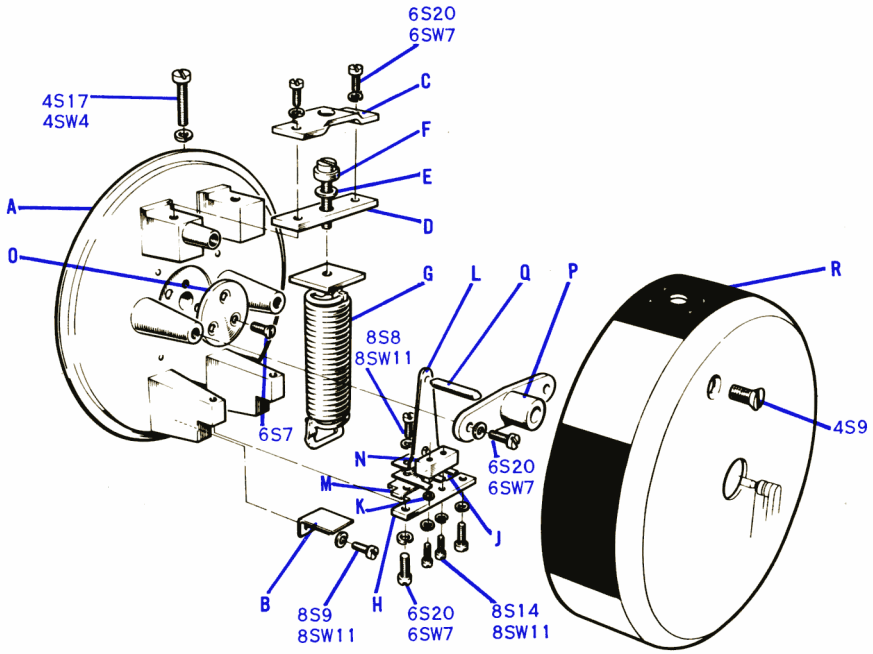


FIG. 7.27 GOVERNOR UNIT S4012

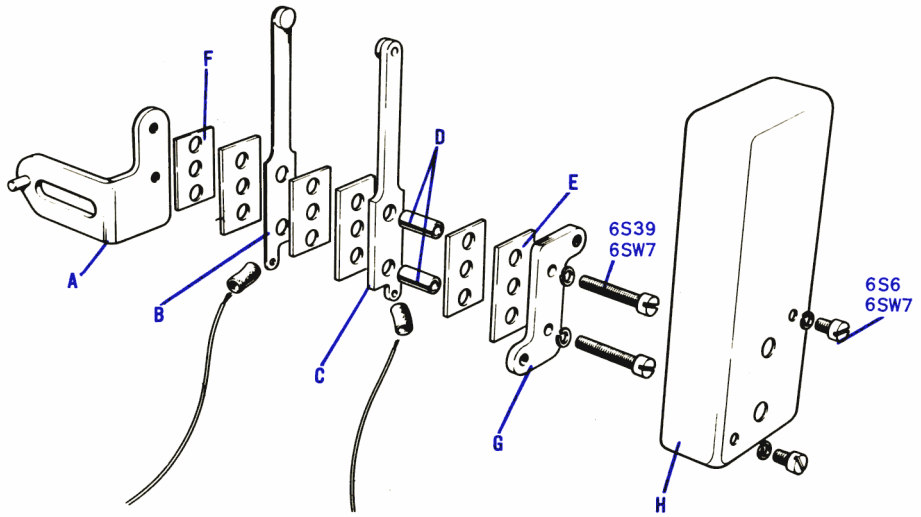


FIG. 7.28 GOVERNOR CONTACTS CP 4282/6

## GOVERNOR UNIT S4012

| *Index Letter* | *Part No.* | *Part Name* |
|---|---|---|
| A | 4012/12 | Governor Body CP |
| B | 4012/14 | Stop Bracket |
| C | 4012/16 | Spring Clamp Plate |
| D | 1910/17A | Spring Plate |
| E | PW5547 | Special Washer |
| F | PS7034 | Special Screw |
| G | 4012/15 | Governor Spring CP *(4,200 rpm)* |
| H | 4012/3 | Contact Arm Support Plate |
| J | 4012/5 | Contact Arm Spring |
| K | PW5759 | Shim *(quantity as required)* |
| L | 4012/7 | Contact Arm |
| M | 4012/6 | Contact Arm Weight |
| N | 4012/4 | Contact Arm Clamp |
| O | 4012/9 | Governor Stop Plate |
| P | 4012/11 | Contact Peg Support Plate CP |
| Q | 4018/30 | Contact Peg *(this item does not form part of this unit)* |
| R | 4012/2 | Cover |

## GOVERNOR CONTACTS CP 4282/6

| *Index Letter* | *Part No.* | *Part Name* |
|---|---|---|
| A | 4018/3 | Mounting Bracket CP |
| B | 4018/7 | Contact Blade CP |
| C | 4018/5 | Contact Blade CP |
| D | PE1225 | Insulating Collet *(2 per CP)* |
| E | PE5121 | Insulator } *3 off each per CP* |
| F | PE5122 | Insulator } |
| G | 4018/9 | Retaining Plate |
| H | 4018/10 | Cover |

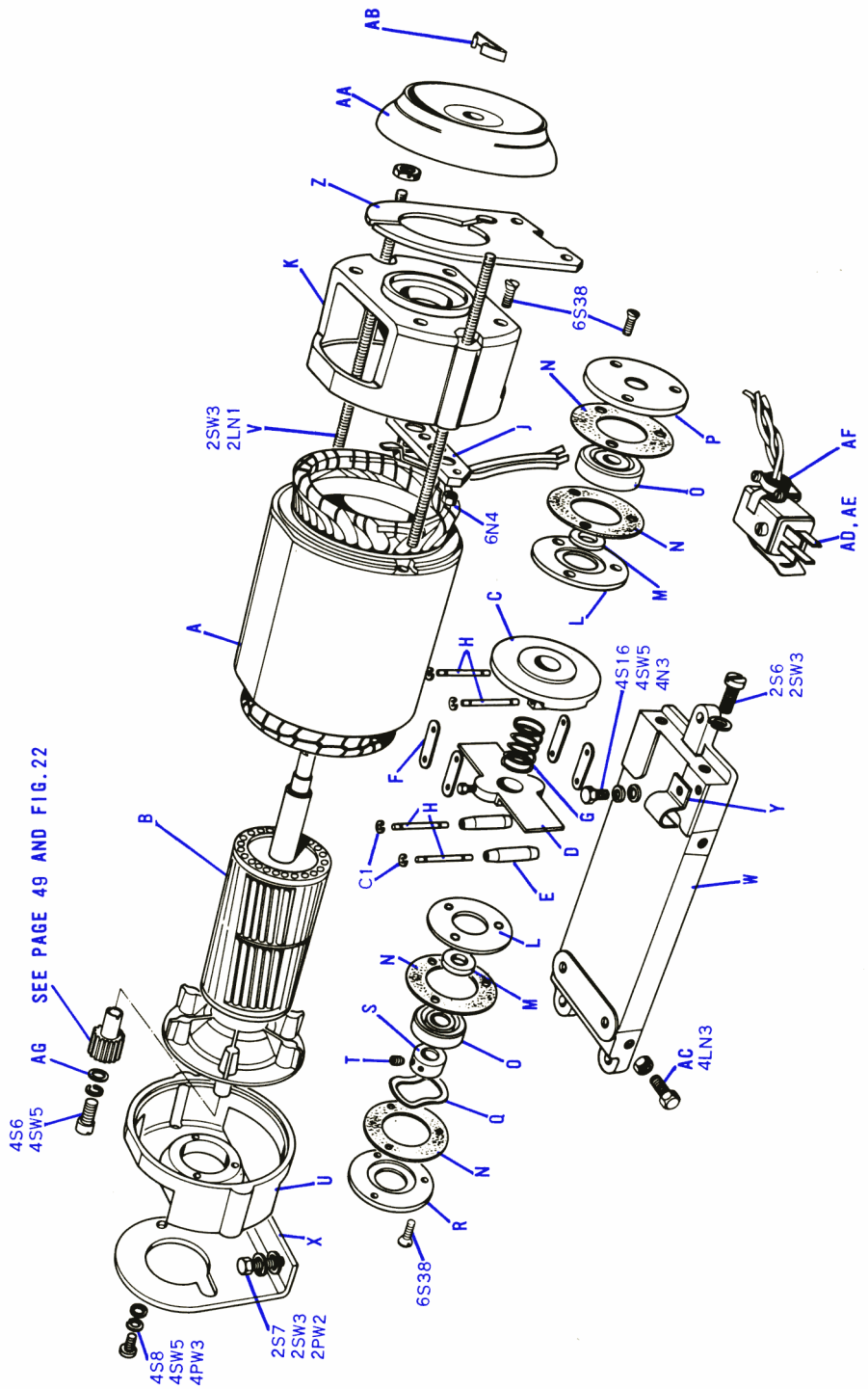


FIG. 7.29 SYNCHRONOUS MOTOR UNIT S4283

## SYNCHRONOUS MOTOR UNIT S4283

| *Index Letter* | *Part No.* | *Part Name* |
|---|---|---|
| | REF526C | Synchronous Motor *includes:-* |
| A | 4228/31A | Stator CP |
| B | 4228/32A | Rotor CP |
| | 4228/54 GRP1 | Switch Mechanism CP *(for 50 cycles mains supply)* } *includes:-* |
| | *or* 4228/54 GRP2 | Switch Mechanism CP *(for 60 cycles mains supply)* } |
| C | 4228/38 | Switch Plate |
| D | 4228/20A | Anchor Plate |
| E | 4228/43 | Roller *(2 per CP) for 50 cycles mains supply* |
| | *or* 4228/44 | Roller *(2 per CP) for 60 cycles mains supply* |
| F | 4228/11A | Link *(4 per CP)* |
| G | PG5161 | Spring |
| H | PP6317 | Pivot Pin *(4 per CP)* |
| | 4228/51 | Switch End Cover CP *includes:-* |
| J | 4228/50 GRP1 | Switch Final Assembly |
| K | 4228/5A | Switch End Cover |
| L | 4040/37 | Bearing Clamp Plate *(2 per unit)* |
| M | 4040/30 | Inner Race Thrust Collar *(2 per unit)* |
| N | 4040/31 | Gasket *(4 per unit)* |
| O | BO 8403/1 | Journal Bearing *(BS.292 Ref.BRL009) 2 per unit* |
| P | 4040/115 | Bearing Cap |
| Q | 4040/32 | Special Washer |
| R | 4040/14 | Bearing Cap |
| S | 4040/12 | Bearing Retainer |
| T | PS5924 | Special Screw *(2 per unit)* |
| U | 4228/4A | Fan End Cover |
| V | 4228/16A | Tie Bar *(2 per unit)* |
| W | 4163/4A | Motor Base Plate |
| X | 4163/3B | Motor Support Bracket |
| Y | BO 4063/4 | Cable Clip |
| Z | 4283/2 | Motor Support Plate |
| AA | 4283/1 | Motor Fan |
| AB | BO 8255/1 | Spire Clip |
| AC | PS5032 | Special Screw |
| AD | 4163/5 | Plug |
| AE | BO 7601/8 | Side Entry Cover |
| AF | BO 4078/1 | Rubber Bush |
| MOTOR PINION *(See page 49 and Fig.22)* | | |
| AG | PW5881 | Special Washer |

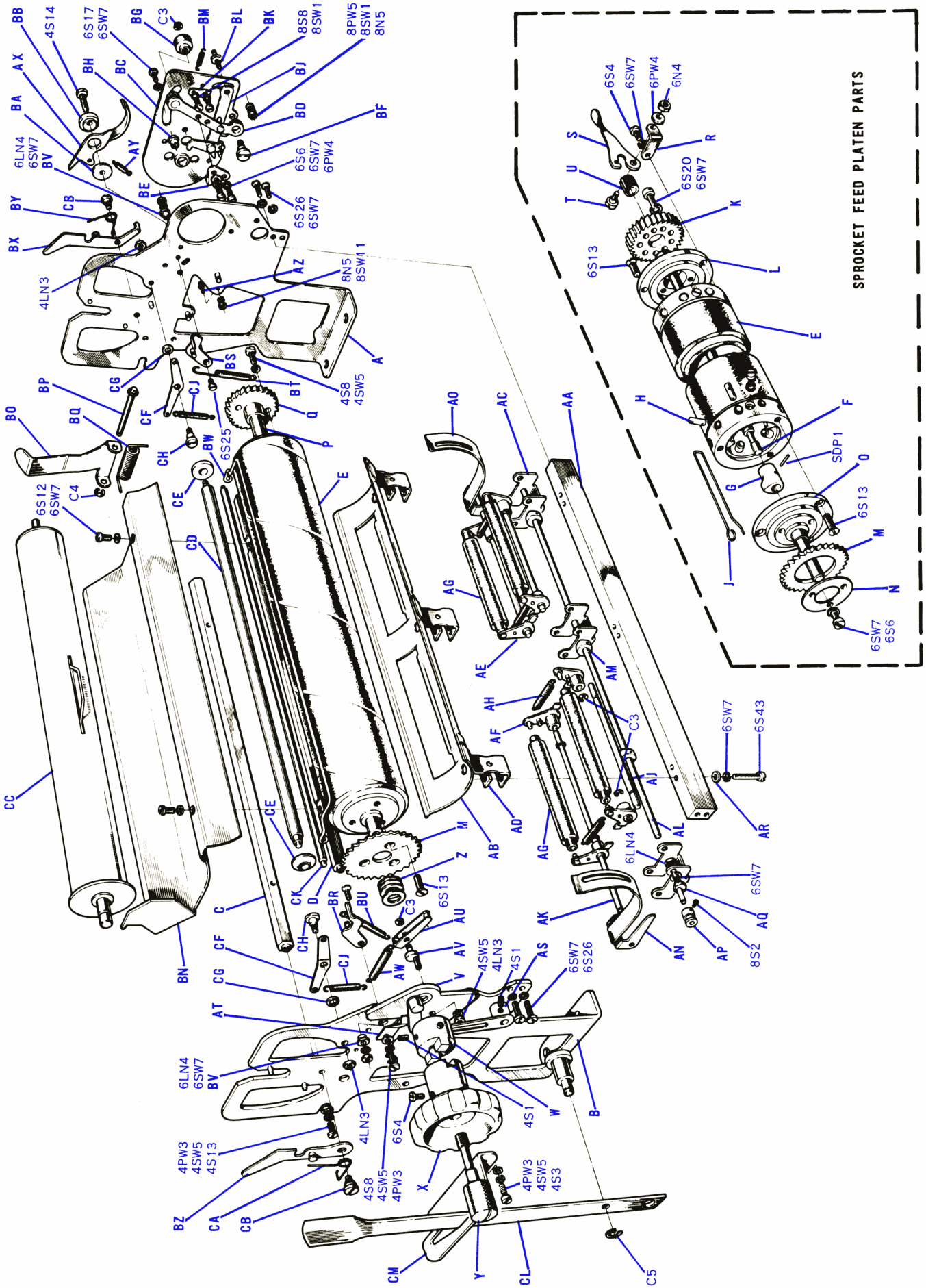


FIG. 7.30 PLATEN UNIT S428I

# PLATEN UNIT S4281 { GROUP 1 Friction Feed / GROUP 2 Sprocket Feed }

| Index Letter | Group 1 Part No. | Group 2 Part No. | Part Name |
|---|---|---|---|
| SIDE PLATES AND TIE RODS | | | |
| A | 4281/4 | 4281/4 | Platen Side Plate (RH) CP |
| B | 4281/3 | 4281/3 | Platen Side Plate (LH) CP |
| C | 4004/25A | 4004/25A | Tie Rod |
| D | 4004/108 | 4004/108 | Tie Bar |
| PLATEN ASSEMBLY | | | |
| | 4004/60 | 4023/124 | Platen Final CP *includes:-* |
| E | 4004/4 | 4023/121 | Platen Sub CP |
| | – | 4023/123A | Platen Spindle CP *includes:-* |
| F | – | 4023/154 | Spindle |
| G | – | 4023/103A | Pin Retraction Cam *(2 per CP)* |
| H | – | 4023/32 | Feed Pin } *20 off each per CP* |
| J | – | PG3230 | Special Spring } *20 off each per CP* |
| | – | 4023/69 | Platen Feed Ratchet CP *includes:-* |
| K | – | 4023/68 | Platen Feed Ratchet |
| L | – | 4023/15A | Platen End Cap |
| M | 4004/19 | 4023/44 | Platen Retention Wheel |
| N | – | 4023/47 | Clamp Wheel |
| O | – | 4023/122 | Platen End Cap CP |
| | 4004/59 | – | Platen Spindle CP *includes:-* |
| P | 4004/26 | – | Platen Spindle |
| Q | 4004/11 | – | Platen Feed Ratchet |
| R | – | 4023/43 | Bearing Bracket |
| S | – | 4023/73 | Sprocket Feed Change Lever |
| T | – | PS5692 | Shouldered Screw |
| U | – | 4023/67 | Distance Collar |
| V | 4281/6 | 4281/6 | Platen Sub Plate CP |
| W | 4004/44 | 4004/44 | Platen Knob Coupling |
| X | 4004/77 | 4004/77 | Platen Knob CP *includes:-* |
| Y | 4004/50 | 4004/50 | Platen Knob Retaining Screw |
| Z | PW5226 | PW5226 | Special Washer *(quantity as required)* |
| PRESSURE ROLLERS | | | |
| | 4023/125 | 4023/125 | Pressure Roller CP *includes:-* |
| AA | 4023/30 | 4023/30 | Support Bar |
| AB | 4023/120 | 4023/120 | Paper Guide CP |
| AC | 4004/32 | 4004/32 | Pressure Frame Support Bracket *(3 per CP)* |
| AD | 4023/37 | 4023/37 | Nut Plate |
| AE | 4023/50 | 4023/50 | Pressure Roller Arm (LH) CP } *4 off each per CP* |
| AF | 4023/54 | 4023/54 | Pressure Roller Arm (RH) CP } *4 off each per CP* |
| AG | 4023/64 | 4023/64 | Roller CP } *4 off each per CP* |
| AH | PG7540 | PG7540 | Tension Spring } *4 off each per CP* |
| AJ | 4023/34 | 4023/34 | Front Roller Arm Pivot } *2 off each per CP* |
| AK | 4023/51 | 4023/51 | Rear Roller Arm Pivot } *2 off each per CP* |
| AL | 4023/35 | 4023/35 | Camshaft |
| AM | 4004/30A | 4004/30A | Cam |
| AN | 4023/109 | 4023/109 | Paper Guide Retainer (LH) CP |
| AO | 4023/110 | 4023/110 | Paper Guide Retainer (RH) CP |
| AP | 4023/111 | 4023/111 | Pivot Bracket Guide |
| AQ | EC5088 | EC5088 | Eccentric Pin |
| AR | PW5190 | PW5190 | Special Washer *(12 max)* |
| AS | 4004/53A | 4004/53A | Pressure Roller Release Lever CP |
| AT | – | PG2133 | Leaf Spring |

| Index Letter | Group 1 Part No. | Group 2 Part No. | Part Name |
|---|---|---|---|
| PLATEN RETENTION | | | |
| AU | 4004/58 | 4023/56 | Retention Roller Bracket CP |
| AV | EC1628 | EC1628 | Eccentric |
| AW | PG7538 | PG7538 | Tension Spring |
| AX | 4004/91 | 4004/91 | Platen Retention Pawl |
| AY | PG7534 | PG7534 | Tension Spring |
| AZ | PP6277 | PP6277 | Spring Anchor Pin |
| BA | PW5745 | PW5745 | Spacer |
| BB | EC1592 | EC1592 | Eccentric |
| FEED CHANGE MECHANISM | | | |
| | 4023/39B | 4023/39B | Ratchet Feed Support Plate CP *includes:-* |
| BC | 4023/40 | 4023/40 | Ratchet Feed Support Plate Sub CP |
| BD | 4004/65A | 4004/65A | Feed Change Lever CP |
| BE | 4004/79 | 4004/79 | Single Line Feed Stop |
| BF | PS5649 | PS5649 | Special Screw |
| BG | PN6030B | PN6030B | Special Nut |
| BH | EC5075 | EC5075 | Special Nut |
| BJ | 4004/71 | 4004/71 | Feed Lever and Pawl CP |
| BK | 4004/48 | 4004/48 | Feed Lever Stop Plate |
| BL | PP8949 | PP8949 | Flanged Pin |
| BM | PG7438 | PG7438 | Tension Spring |
| PAPER GUIDE | | | |
| | 4004/96 | 4004/96 | Paper Guide and Damper Assembly Unit *includes:-* |
| BN | 4004/81A | 4004/81A | Paper Guide Sub CP |
| BO | 4004/95 | 4004/95 | Paper Damper |
| BP | PP6857 | PP6857 | Damper Spindle |
| BQ | PG7548 | PG7548 | Damper Spring |
| BR | 4023/115 | 4023/115 | Paper Guide Bar Lever (LH) CP |
| BS | 4023/116 | 4023/116 | Paper Guide Bar Lever (RH) CP |
| BT | PG7539A | PG7539A | Spring |
| BU | PG7537 | PG7537 | Spring |
| BV | PB4396B | PB4396B | Bush *(2 per unit)* |
| BW | 4023/49 | 4023/49 | Stripper Bar |
| PAPER RETENTION | | | |
| BX | 4004/93 | 4004/93 | Paper Retention and Throwout Lever CP |
| BY | PG3166A | PG3166A | Special Spring |
| BZ | 4004/55 | 4004/55 | Paper Tube Tension Lever CP |
| CA | PG3229 | PG3229 | Special Spring |
| CB | PS5648 | PS5648 | Special Screw |
| CC | 4004/69 | 4004/69 | Paper Tube CP |
| PAPER TENSION | | | |
| CD | 4004/36 | 4004/36 | Paper Tension Rod |
| CE | 4004/37 | 4004/37 | Tension Rod End Cheek } *2 off each per unit* |
| CF | 4004/38 | 4004/38 | Paper Tension Shaft Lever } *2 off each per unit* |
| CG | PW5673 | PW5673 | Special Washer } *2 off each per unit* |
| CH | PS5647A | PS5647A | Special Screw } *2 off each per unit* |
| CJ | PG7442 | PG7442 | Tension Spring } *2 off each per unit* |
| CK | 4004/82 | 4004/82 | Tension Bar } *2 off each per unit* |
| PRINT FORCE CONTROL | | | |
| CL | 4004/46 | 4004/46 | Print Spring Change Lever |
| CM | 4004/17 | 4004/17 | Stop Bracket |

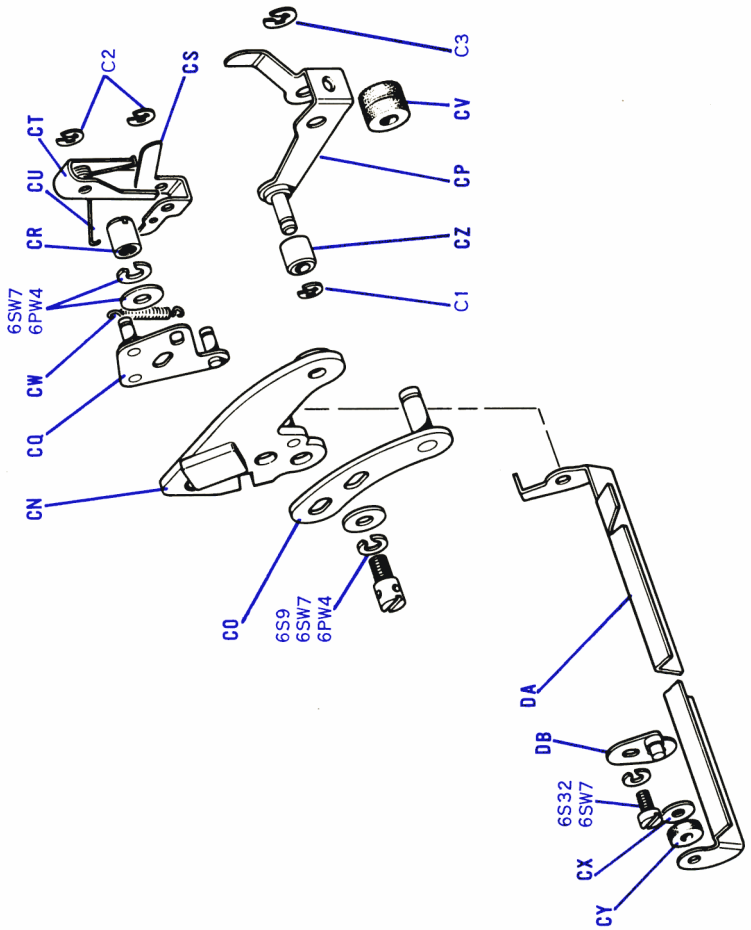


FIG. 7.31 TWO COLOUR PRINT PARTS ON PLATEN UNIT

## PLATEN UNIT S4281 (Continued)

| *Index Letter* | *Part No.* | *Part Name* |
|---|---|---|
| TWO COLOUR PRINTING PARTS | | |
| *The following parts are only fitted to machines with the Two Colour Printing facility* | | |
| | 4023/186 GRP1 | Control Mechanism CP *includes:-* |
| CN | 4004/109 | Control Mechanism Back Plate CP |
| CO | 4004/111 | Backplate Extension CP |
| CP | 4004/113 | Slat Operating Lever CP |
| CQ | 4004/116 | Control Mechanism Sub Plate CP |
| CR | PN6026 | Special Nut |
| CS | 4004/115 | Slat Latch |
| CT | 4004/118 | Slat Latch Retainer |
| CU | PG3237 | Torsion Spring |
| CV | PF1115 | Lubricating Washer *(2 per CP)* |
| CW | PG7197 | Tension Spring |
| CX | PW5711 | Special Washer |
| CY | PF1134 | Lubricating Washer |
| CZ | RL1186 | Roller |
| DA | 4004/119 | Ribbon Jumper Slat |
| DB | 4004/120 | Bearing Plate CP |

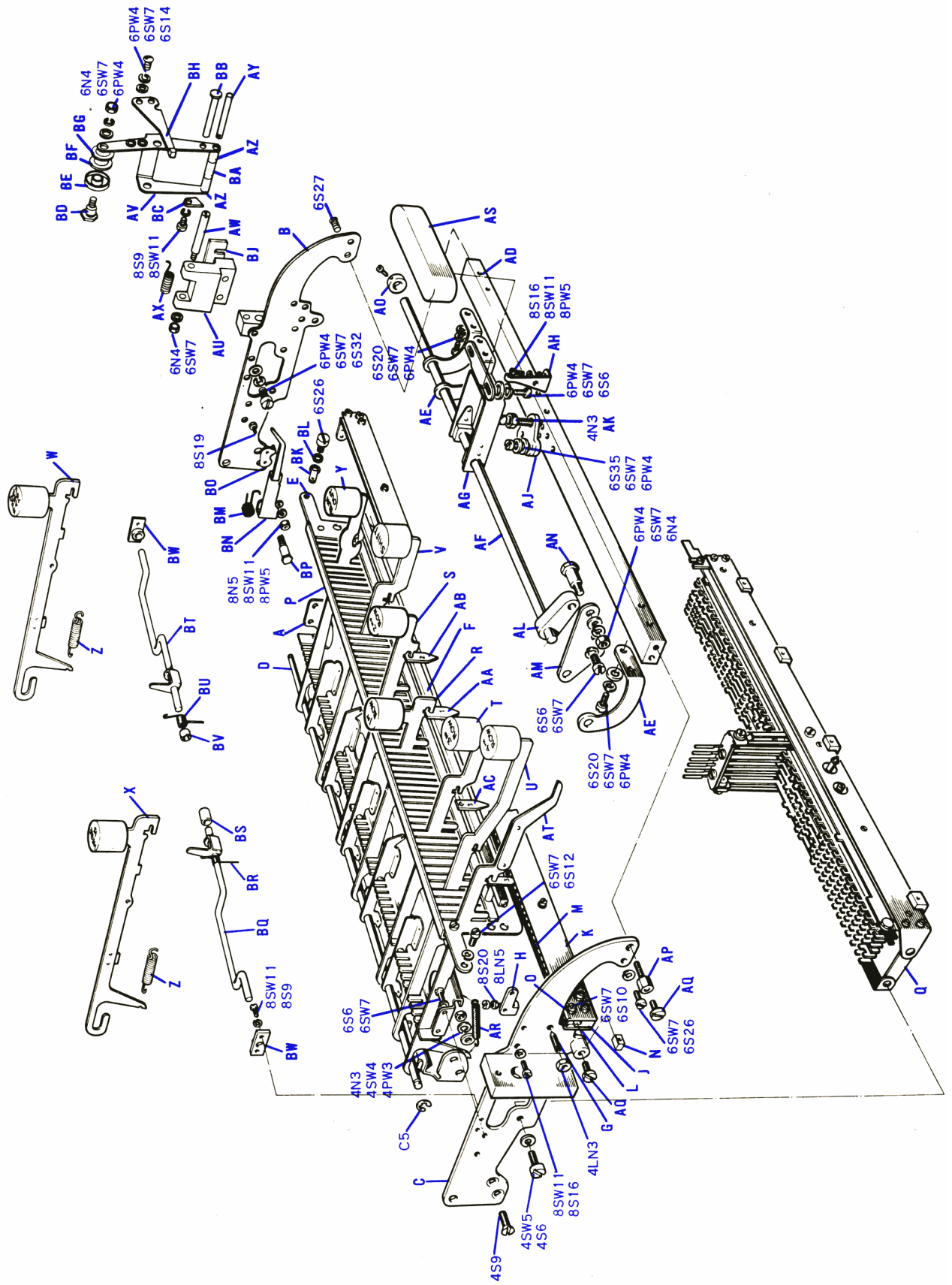


FIG. 7.32 KEYBOARD UNIT S4008A

# KEYBOARD UNIT S4008A

| | | |
|---|---|---|
| GROUP 1 | 3-Row with Short Single Space Bar | Without Tape Reader Facility |
| GROUP 2 | 4-Row with Long Single Space Bar | |
| GROUP 3 | 4-Row with Figures, Space and Letters Bar | |
| GROUP 7 | 3-Row with Long Single Space Bar | |
| GROUP 4 | 3-Row with Short Single Space Bar | With Tape Reader Facility |
| GROUP 5 | 4-Row with Long Single Space Bar | |
| GROUP 6 | 4-Row with Figures, Space and Letters Bar | |
| GROUP 8 | 3-Row with Long Single Space Bar | |

| Index Letter | Part Nos. 3-row Keyboard | Part Nos. 4-row Keyboard | Part Name |
|---|---|---|---|
| | 4008/1B | 4008/1B | Keyboard Sub-Assembly *includes:-* |
| A | 4008/17A | 4008/17A | Rear Keybar Rack CP |
| B | 4008/12B | 4008/12B | Keyboard Side Plate CP (RH) |
| C | 4008/8B | 4008/8B | Keyboard Side Plate CP (LH) |
| D | 4008/94 | 4008/94 | Keybar Pivot |
| E | 4008/13A | 4008/13A | Keyboard Front Plate |
| F | 4008/26 | 4008/26 | Trip Slat CP |
| G | PS5927 | PS5927 | Cone Point Screw |
| H | 4008/204 | 4008/204 | Trip Slat Stop Bracket |
| | 4008/124 | 4008/124 | Ball Cage CP *includes:-* |
| | 4008/123 | 4008/123 | Ball Cage Sub CP *includes:-* |
| J | 4008/122 | 4008/122 | Ball Cage Channel |
| K | 4008/27 | 4008/27 | Ball Cage Front Plate |
| L | 4008/29 | 4008/29 | Ball Cage Back Plate |
| M | BO 8581/2 | BO 8581/2 | Ball Bearing *(3/16 in. dia.) 64 per CP* |
| N | 4008/31 | 4008/31 | Ball Stop *(2 per CP)* |
| O | PW5190 | PW5190 | Special Washer *(2 per CP)* |
| P | 4008/20A | 4008/20A | Stop Strip CP |
| Q | 4008/192 | 4008/192 | Clamp Plate |
| KEYBARS | | | |
| NOTE: | *When ordering these parts the inscription required on the Keybutton must be stated* | | |
| R | 4008/171A | 4008/171A | Keybar and Button CP 1st Row |
| S | 4008/172A | 4008/172A | Keybar and Button CP 2nd Row |
| T | 4008/173A | 4008/173A | Keybar and Button CP 3rd Row |
| U | – | 4008/175A | Keybar and Button CP 4th Row |
| V | 4008/187A | 4008/187A | Shift Keybar and Button CP 1st Row |
| | *or* 4008/176A | 4008/176A | Shift Keybar and Button CP 2nd Row |
| | *or* 4008/174A | 4008/174A | Shift Keybar and Button CP 3rd Row |
| | *or* – | 4008/177A | Shift Keybar and Button CP 4th Row |
| W | 4008/178A | 4008/178A | 'Who Are You?' Keybar and Button CP 1st Row |
| | *or* 4008/188A | 4008/188A | 'Who Are You?' Keybar and Button CP 2nd Row |
| | *or* 4008/179A | 4008/179A | 'Who Are You?' Keybar and Button CP 3rd Row |
| | *or* – | 4008/180A | 'Who Are You?' Keybar and Button CP 4th Row |
| X | 4008/181A | 4008/181A | 'Here Is' Keybar and Button CP 1st Row |
| | *or* 4008/182A | 4008/182A | 'Here Is' Keybar and Button CP 2nd Row |
| | *or* 4008/183A | 4008/183A | 'Here Is' Keybar and Button CP 3rd Row |
| Y | 4008/184A | 4008/184A | 'Run Out' Keybar and Button CP 1st Row |
| | *or* 4008/185A | 4008/185A | 'Run Out' Keybar and Button CP 2nd Row |
| | *or* 4008/186A | 4008/186A | 'Run Out' Keybar and Button CP 3rd Row |
| Z | PG7470 | PG7470 | Tension Spring *(one required per Keybar)* |

*Only required when an Answer Back Unit is fitted*

NOTE: *The top row of keys on 3- and 4-row Keyboards is normally referred to as the first row and uses 1st row keybars. An exception to this is a machine with a 3-row keyboard mounted in a Silencing Cover. In this case the top row of character producing keys are 2nd row keybars.*

| Index Letter | Part Nos. 3-row Keyboard | Part Nos. 4-row Keyboard | Part Name |
|---|---|---|---|
| KEYBAR DARTS | | | |
| AA | 4008/90A | 4008/90A | Keybar Dart No.1 *(1st row)* |
| AB | 4008/91A | 4008/91A | Keybar Dart No.2 *(2nd row)* |
| AC | 4008/92A | 4008/92A | Keybar Dart No.3 *(3rd and 4th row)* |
| SHORT SINGLE SPACE BAR | | | |
| | 4008/212 | – | 3rd row Space Bar CP *includes:-* |
| AD | 4008/161B | – | Space Frame Support Bar |
| AE | 4008/213 | – | Shift Frame Support |
| AF | 4008/218 | – | Space Frame Spindle |
| AG | 4008/210 | – | Space Pad Frame CP |
| AH | 4008/217 | – | Shift Frame Stop |
| AJ | 4008/215 | – | Shift Pad Stop CP |
| AK | 1855/325 | – | Special Stop Screw CP |
| AL | 4008/134 | – | Adjustment Block |
| AM | 4008/216 | – | Space Key Lever |
| AN | PS5132 | – | Special Screw |
| AO | CS1070 | – | Set Collar and Screw |
| AP | PS5686 | – | Special Hexagon Head Screw |
| AQ | PS5289 | – | Special Screw |
| AR | PG7523 | – | Tension Spring |
| AS | 4008/107 | – | Space Pad CP |
| AT | 4008/219A | – | Space Keybar CP |
| TAPE READER PARTS ON KEYBOARD UNIT | | | |
| *The following parts are only fitted to machines with the Tape Reader Attachment* | | | |
| | 4151/42 | 4151/42 | Reset Mechanism CP *includes:-* |
| AU | 4151/43 | 4151/43 | Reset Lever Bearing Bracket |
| AV | 4151/36 | 4151/36 | Comb Bar Reset Lever CP |
| AW | PP5656 | PP5656 | Threaded Pin |
| AX | PG3307 | PG3307 | Torsion Spring |
| AY | PP6913 | PP6913 | Special Parallel Pin |
| AZ | RL1183 | RL1183 | Roller *(2 per CP)* |
| BA | RL1249 | RL1249 | Roller |
| BB | PP6912 | PP6912 | Special Parallel Pin |
| BC | 4151/44 | 4151/44 | Roller Pivot Retainer |
| BD | EC5092 | EC5092 | Eccentric |
| BE | RL1185 | RL1185 | Roller |
| BF | PF1126 | PF1126 | Lubrication Washer |
| BG | PW5689 | PW5689 | Special Washer |
| BH | 4151/41 | 4151/41 | Latch Lever CP |
| BJ | 4008/382 | 4008/382 | Shim |
| BK | CT1026 | CT1026 | Contact Tag |
| BL | PB4902 | PB4902 | Spacer |
| BM | PG3323 | PG3323 | Special Spring |
| | 4008/397 | 4008/397 | WRU? Disable Lever CP *includes:-* |
| BN | 4008/398 | 4008/398 | WRU? Disable Lever |
| BO | 4008/399 | 4008/399 | Striker Plate |
| BP | PS5184 | PS5184 | Special Screw |
| ANSWER BACK PARTS ON KEYBOARD UNIT | | | |
| *The following parts are only fitted to machines with the Answer Back facility* | | | |
| BQ | 4008/78A | 4008/78A | 'Here Is' Treadle CP |
| BR | PG3188 | PG3188 | Special Spring |
| BS | PB4556A | PB4556A | Collar |
| BT | 4008/80A | 4008/80A | WRU? Treadle CP |
| BU | PG3189 | PG3189 | Special Spring |
| BV | PB4557A | PB4557A | Collar *(2 per unit)* |
| BW | 4008/81 | 4008/81 | Outer Treadle Bearing *(2 per unit)* |

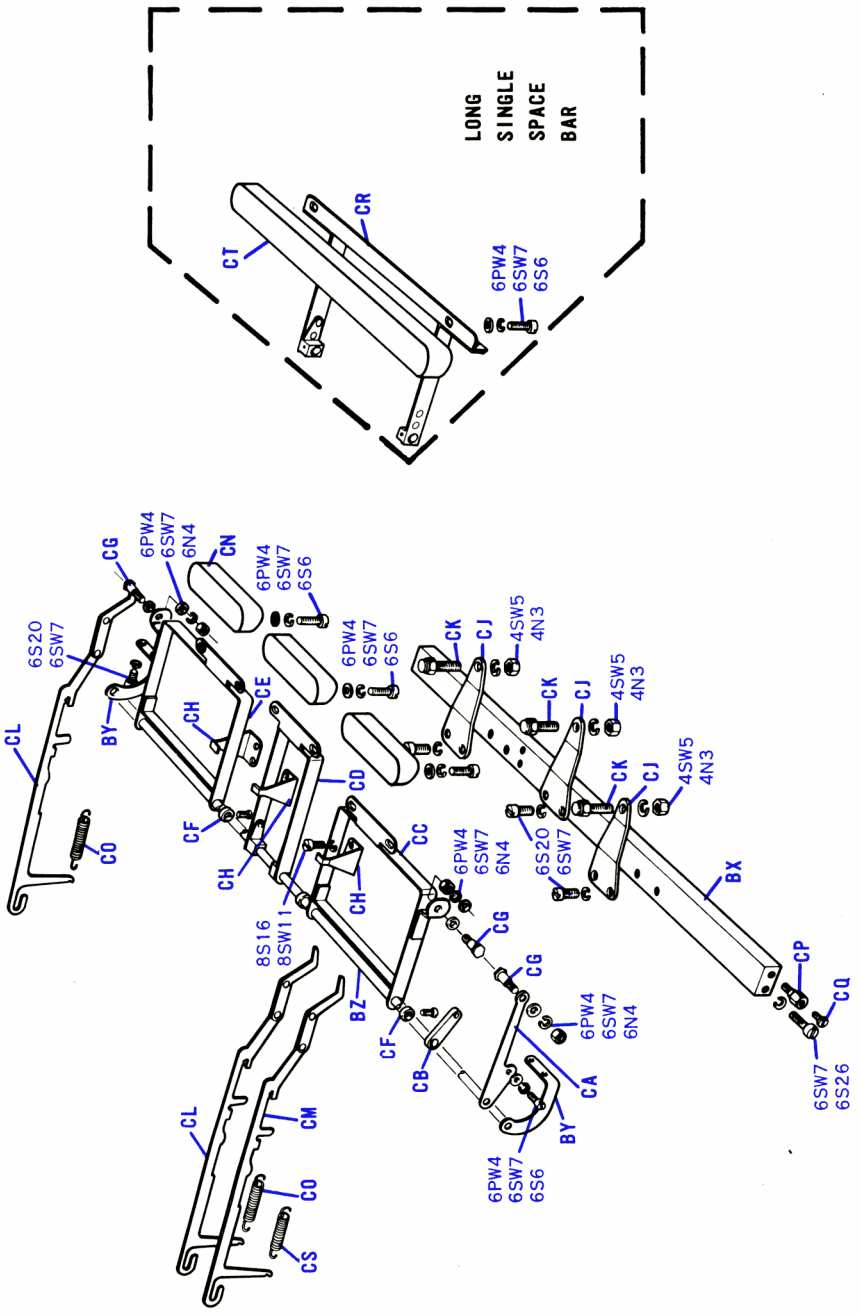


FIG. 7.33 KEYBOARD SPACE BAR MECHANISM

## KEYBOARD UNIT S4008A (Continued)

| *Index Letter* | *Part Nos.* 3-row Keyboard | 4-row Keyboard | *Part Name* |
|---|---|---|---|
| FIGURES, SPACE AND LETTERS BAR | | | |
| | | 4008/141 | Treble Space Bar CP *includes:-* |
| BX | | 4008/136B | Space Frame Support Bar |
| BY | | 4008/137 | Shift Frame Support |
| BZ | | 4008/140B | Space Frame Spindle |
| CA | | 4008/135 | Space Key Lever |
| CB | | 4008/134 | Adjustment Block |
| CC | | 4008/130 | Figures Shift Frame CP |
| CD | | 4008/169 | Space Pad Frame CP |
| CE | | 4008/131 | Letter Shift Frame CP |
| CF | | CS1070 | Set Collar and Screw *(3 per CP)* |
| CG | | PS5132 | Special Screw *(3 per CP)* |
| CH | | 4008/138A | Shift Frame Stop } |
| CJ | | 4008/139 | Shift Pad Stop } *3 of each per CP* |
| CK | | 1855/325 | Special Stop Screw CP } |
| CL | | 4008/120B | Shift Dummy Keybar CP *(2 per CP)* |
| CM | | 4008/225A | Space Dummy Keybar CP |
| CN | | 4008/146 | Space and Shift Pad *(Plain)* |
| | | *or* 4008/151 | Space and Shift Pad *(Moulded Character)* |

| *Index Letter* | *Part Nos.* 3-row Keyboard | 4-row Keyboard | *Part Name* |
|---|---|---|---|
| CO | | PG7523 | Tension Spring *(3 off per unit)* |
| CP | | PS5686 | Special Hexagon Head Screw |
| CQ | | PS5289 | Special Screw |
| LONG SINGLE SPACE BAR | | | |
| | 4008/389 | 4008/145 | Long Single Space Bar CP *includes:-* |
| BX | 4008/136B | 4008/136B | Space Frame Support Bar |
| BY | 4008/137 | 4008/137 | Shift Frame Support *(3 per unit)* |
| BZ | 4008/140B | 4008/140B | Space Frame Spindle |
| CA | 4008/135 | 4008/135 | Space Key Lever |
| CB | 4008/134 | 4008/134 | Adjustment Block |
| CF | CS1070 | CS1070 | Set Collar and Screw |
| CG | PS5132 | PS5132 | Special Screw |
| CH | 4008/138A | 4008/138A | Shift Frame Stop |
| CJ | 4008/139 | 4008/139 | Shift Pad Stop |
| CK | 1855/325 | 1855/325 | Special Stop Screw CP *(2 per unit)* |
| CR | 4008/385 | 4008/170 | Long Space Pad Frame CP |
| CM | 4008/225A | 4008/225A | Space Dummy Keybar CP |
| CP | PS5686 | PS5686 | Special Hexagon Head Screw |
| CQ | PS5289 | PS5289 | Special Screw |
| CS | PG7558 | PG7558 | Tension Spring |
| CT | 4008/147 | 4008/147 | Long Space Pad |

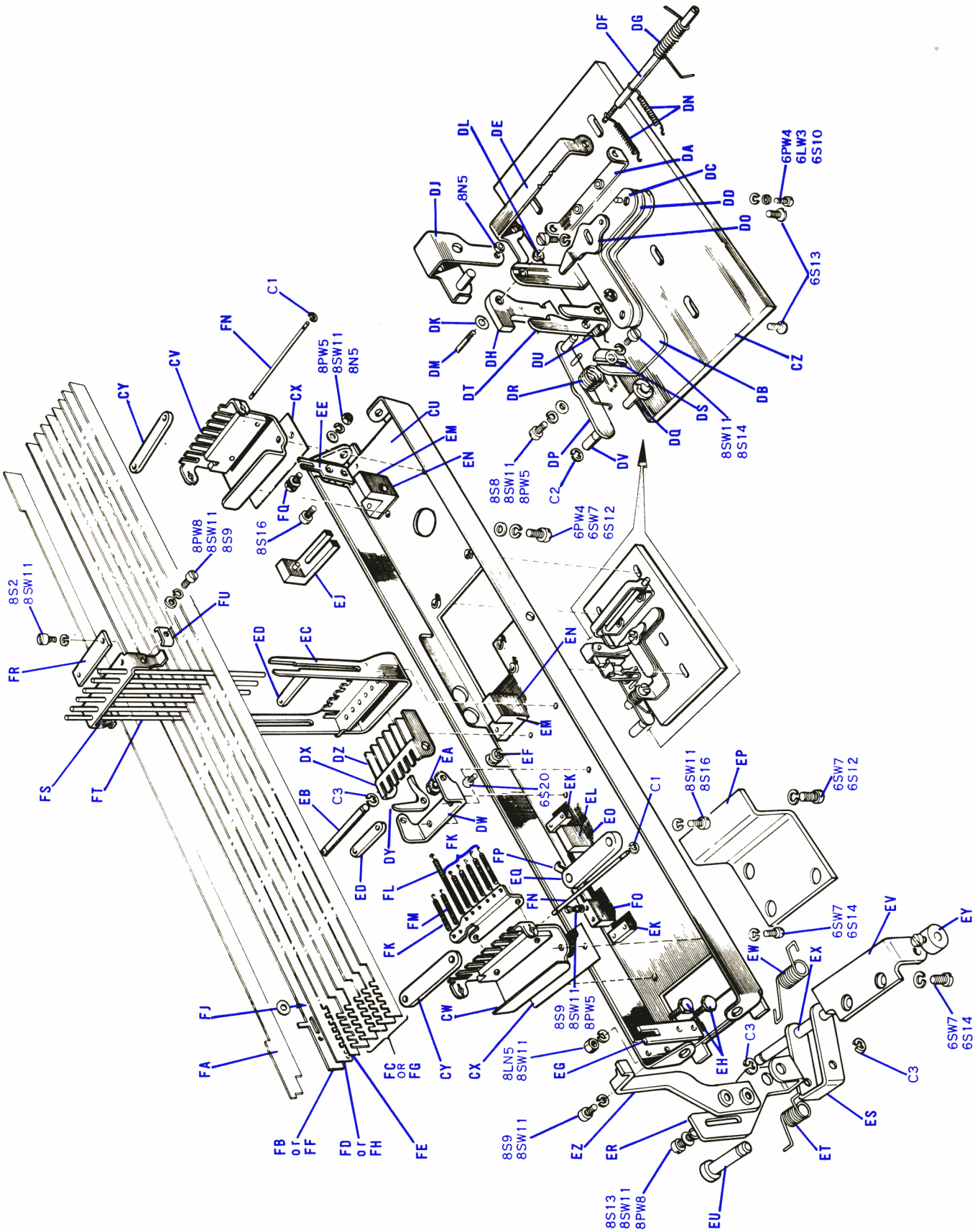


FIG. 7.34 COMBINATION BAR UNIT S4164

## KEYBOARD UNIT S4008A (Continued)

| Index Letter | Part Nos. 3-row Keyboard | Part Nos. 4-row Keyboard | Part Name |
|---|---|---|---|
| COMBINATION BAR UNIT | | | |
| | S4164 GRP1 | S4164 GRP1 | Combination Bar Unit *(for machines without Tape Reader Facility) includes:-* |
| | *or* S4164 GRP2 | S4164 GRP2 | Combination Bar Unit *(for machines with Tape Reader Facility) includes:-* |
| | 4164/1 GRP1 | 4164/1 GRP1 | Combination Bar Sub-Assembly *(used on Group 1)* } *includes:-* |
| | *or* 4164/1 GRP2 | 4164/1 GRP2 | Combination Bar Sub-Assembly *(used on Group 2)* } |
| CU | 4008/4D | 4008/4D | Keyboard Main Frame CP |
| CV | 4008/221 | 4008/221 | Comb Bar Support CP (LH) |
| CW | 4008/61A | 4008/61A | Comb Bar Support CP (RH) |
| CX | 4008/207 | 4008/207 | Shim *(2 per unit)* |
| CY | 4008/84 | 4008/84 | Clamp Plate *(2 per unit)* |
| TRIP MECHANISM | | | |
| | 4008/106B | 4008/106B | Trip Mechanism CP *includes:-* |
| CZ | 4008/241 | 4008/241 | Trip Mechanism Base Plate |
| DA | 4008/237 | 4008/237 | Bracket CP |
| DB | 4008/240 | 4008/240 | Trip Mechanism Bracket |
| DC | 4008/239 | 4008/239 | Nut Plate CP |
| DD | 4008/242 | 4008/242 | Spacer |
| DE | 4008/104 | 4008/104 | Comb Bar Lever |
| DF | 4008/105 | 4008/105 | Comb Bar Lever Pin |
| DG | PG3185 | PG3185 | Special Spring |
| DH | 4008/103A | 4008/103A | Comb Bar Lever Latch CP |
| DJ | 4008/101 | 4008/101 | Latch Control Lever CP |
| DK | PW5642 | PW5642 | Shim *(0.005 in.)* |
| DL | PN5101 | PN5101 | Special Hexagonal Nut |
| DM | PS5665 | PS5665 | Shouldered Screw |
| DN | PG7471 | PG7471 | Tension Spring *(2 per CP)* |
| DO | 4008/235 | 4008/235 | Latch Control Stop |
| DP | 4008/97B | 4008/97B | Trip Lever CP |
| DQ | PB4558A | PB4558A | Shouldered Bush |
| DR | PG3232 | PG3232 | Special Spring |
| DS | PW5705 | PW5705 | Special Washer *(2 per CP)* |
| DT | 4008/99 | 4008/99 | Trip Lever Pawl |
| DU | PG3186 | PG3186 | Special Spring |
| DV | RL1183 | RL1183 | Roller |
| TRANSFER BELLCRANKS AND PUSH ROD STAND | | | |
| | 4008/70 | 4008/70 | Transfer Bellcrank CP *includes:-* |
| DW | 4008/65A | 4008/65A | Transfer Bellcrank Carrier |
| DX | 4008/66 | 4008/66 | Bellcrank Rack |
| DY | 4008/67 | 4008/67 | Code Transfer Bellcrank *(6 per CP)* |
| DZ | 4008/68 | 4008/68 | Bellcrank Separator *(5 per CP)* |
| EA | PF1098 | PF1098 | Felt Lubricator *(12 per CP)* |
| EB | PP6859 | PP6859 | Bellcrank Pivot |
| EC | 4008/64A | 4008/64A | Push Rod Stand CP |
| ED | 4008/88 | 4008/88 | Clamp Plate *(2 per CP)* |
| DOWEL BLOCKS AND BEARINGS | | | |
| EE | 4008/196A | 4008/196A | Shiftlock Bearing CP (LH) |
| EF | 4008/162 | 4008/162 | Shiftlock Bar Centre Bearing |
| EG | 4008/203 | 4008/203 | Shiftlock Bearing Plate (RH) |
| EH | * PS5697 | PS5697 | Shiftlock Bearing (RH) |
| EJ | 4008/194 | 4008/194 | Dowel Clip CP *(4 per CP)* |
| EK | 4008/195 | 4008/195 | Clamp Plate *(2 per CP)* |
| EL | 4008/268 | 4008/268 | Locking Bar Support |
| EM | 4008/82A | 4008/82A | Locking Bar Support *(2 per CP)* |
| EN | 4008/379 | 4008/379 | Shim *(2 per CP)* |
| EO | 4008/378 | 4008/378 | Shim |
| EP | 4151/172 | 4151/172 | Cover Plate *(for machines with Tape Reader Facility)* |
| EQ | 4151/45 | 4151/45 | Keep Plate *(for machines with Tape Reader Facility)* |
| | 4151/229 | 4151/229 | Trip Bracket Assembly CP *includes:- (for machines with Tape Reader Facility)* |
| ER | 4151/167 | 4151/167 | Trip Bracket |
| ES | 4151/166 | 4151/166 | Link Bracket |
| ET | PG3302 | PG3302 | Torsion Spring |
| EU | PP8101 | PP8101 | Pivot Pin |
| EV | 4151/165 | 4151/165 | Manual Trip Mounting Bracket |
| EW | PG3303A | PG3303A | Torsion Spring |
| EX | PP6914 | PP6914 | Link Pivot Pin |
| EY | CS1021 | CS1021 | Set Collar and Screw |
| EZ | 4151/150 | 4151/150 | Disable Lever CP |
| COMBINATION BARS | | | |
| | 4008/58 | 4008/58 | Set of Combination Bars CP *(for machines without Tape Reader Facility) comprises:-* |
| FA | 4008/113 | 4008/113 | Shift Lock Bar CP } *When ordering these parts state marking on each bar* |
| FB | 4008/110 | 4008/110 | Run Out Bar CP } |
| FC | 4008/57 | 4008/57 | Combination Bar CP *(5 per unit)* } |
| FD | 4008/55 | 4008/55 | Trip Bar CP |
| FE | 4008/53A | 4008/53A | Locking Bar CP |
| | 4151/26 | 4151/26 | Set of Combination Bars CP *(for machines with Tape Reader Facility) comprises:-* |
| FA | 4008/113 | 4008/113 | Shift Lock Bar CP } *When ordering these parts state marking on each bar* |
| FF | 4151/16 | 4151/16 | Run Out Bar CP } |
| FG | 4151/15 | 4151/15 | Combination Bar CP *(5 per unit)* } |
| FH | 4151/17 | 4151/17 | Trip Bar CP |
| FE | 4008/53A | 4008/53A | Locking Bar CP |
| FJ | PW5729 | PW5729 | Shim *(0.005 in.) 2 per unit* |
| EH | PS5697 | PS5697 | Shiftlock Upper Bearing |
| FK | PG7472 | PG7472 | Tension Spring *(on machines less Tape Reader 6 per unit used on items FA and FG, on machines with Tape Reader 1 used per unit on item FA only)* |
| | *or* PG7661A | PG7661A | Tension Spring *(on machines with Tape Reader 5 used per unit on item FG)* |
| FL | PG7077 | PG7077 | Tension Spring |
| FM | PG7624 | PG7624 | Tension Spring |
| FN | 4008/87A | 4008/87A | Comb Bar Retainer |
| FO | * 4008/116 | 4008/116 | Bias Spring Block |
| FP | * PG2129 | PG2129 | Shift Lock Bias Spring |
| FQ | * 4008/114A | 4008/114A | Shift Lock Upper Bearing (LH) |
| PUSH RODS | | | |
| | 4008/267 | 4008/267 | Push Rod CP *includes:-* |
| FR | 4008/245 | 4008/245 | Push Rod Retainer |
| FS | 4008/246 | 4008/246 | Push Rod Top Rack CP |
| FT | 4008/244 | 4008/244 | Push Rod |
| FU | 4008/83 | 4008/83 | Clamp Plate |

* NOTE: *These items are required only when a Shift Lock Bar is fitted*

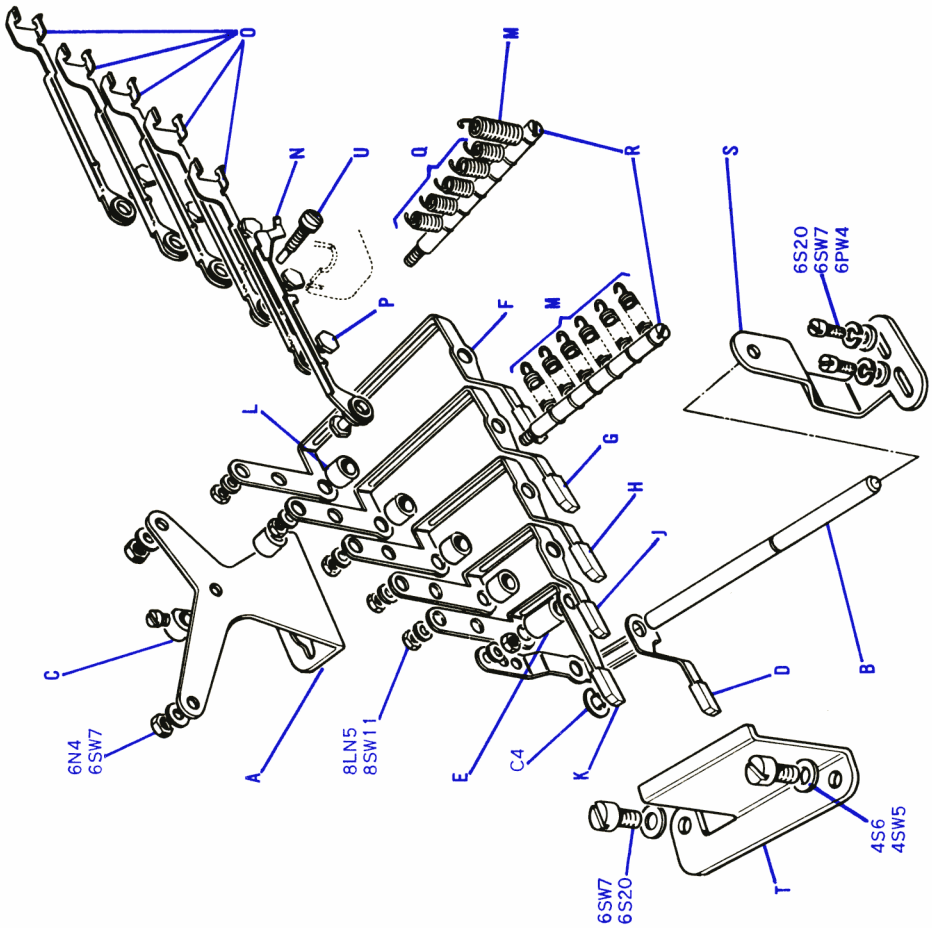


FIG. 7.35 SELECTOR FRAMES UNIT S4006

## SELECTOR FRAMES UNIT S4006

| *Index Letter* | *Part No.* | *Part Name* |
|---|---|---|
| A | 4006/10 | Selector Frames Rear Bearing |
| B | 4006/11 | Selector Frames Pivot Shaft |
| C | CS1044 | Set Collar and Screw |
| D | 4006/13 | Trip Frame CP |
| E | PB4470 | Trip Frame Spacing Collar |
| F | 4006/14 | Selector Frame No. 1 CP |
| G | 4006/15 | Selector Frame No. 2 CP |
| H | 4006/16 | Selector Frame No. 3 CP |
| J | 4006/17 | Selector Frame No. 4 CP |
| K | 4006/18 | Selector Frame No. 5 CP |
| L | PB4471 | Selector Frames Spacing Collar *(5 per unit)* |
| M | PG7449 | Tension Spring *(7 per unit)* |
| N | 4006/20 | Trip Bar CP |
| O | 4006/19 | Selector Bar *(5 per unit)* |
| P | PS5127 | Special Screw *(6 per unit)* |
| Q | PG7450 | Tension Spring *(5 per unit)* |
| R | PP6218 | Spring Anchor Pin *(2 per unit)* |
| SELECTOR FRAMES BEARING | | |
| S | 4000/35 | Selector Frames Front Bearing } *assembled to Main Base* |
| T | 4000/39 | Selector Frames Rack *(used only when Answer Back Unit is not fitted)* } *assembled to Main Base* |
| U | PS5673 | Special Screw *(assembled to the Translator Unit)* |

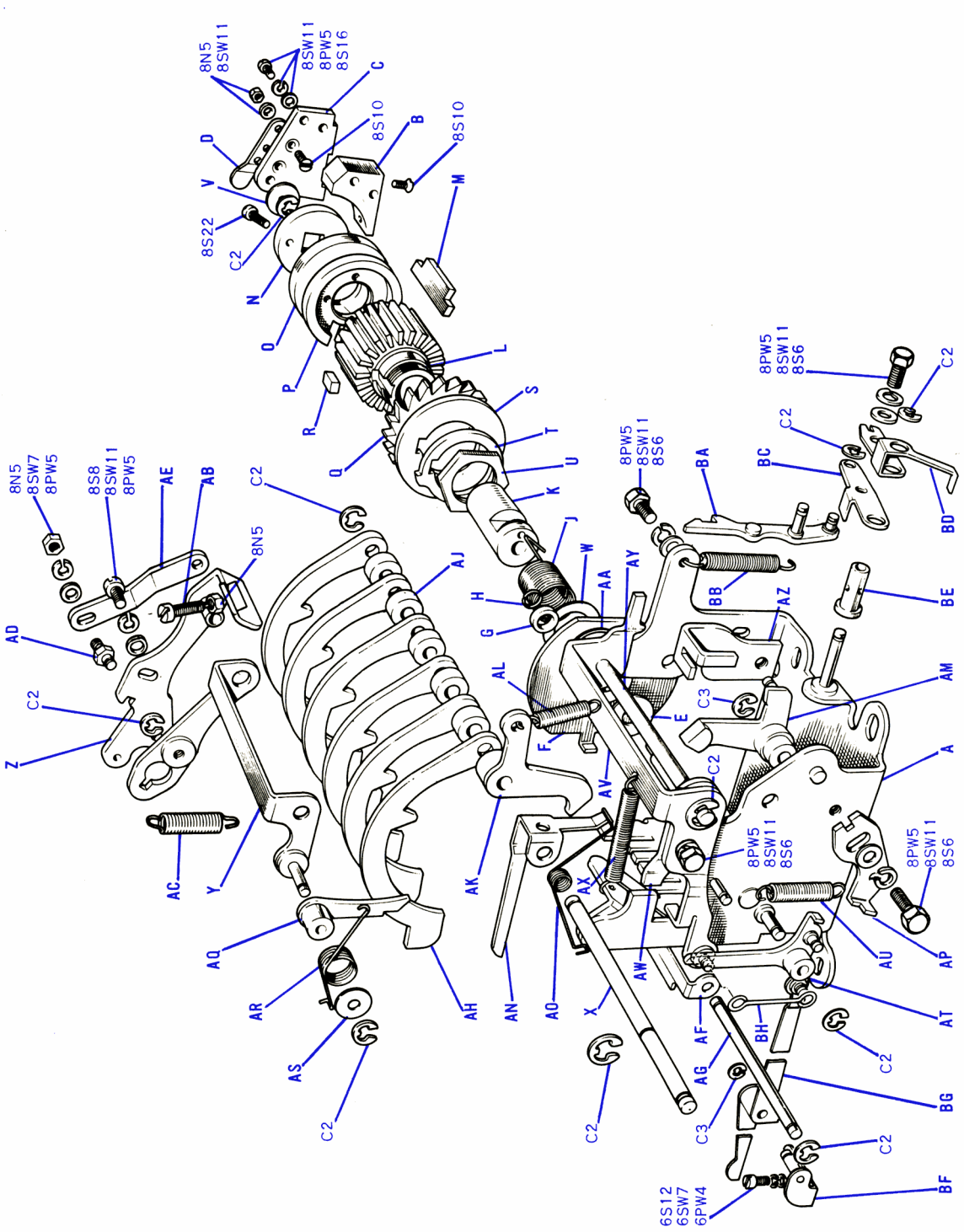


FIG. 7.36 ANSWER BACK UNIT S4017A

# ANSWER BACK UNIT S4017A

| Index Letter | Part No. | Part Name |
|---|---|---|
| A | 4017/79 | Answer Back Frame CP *(comprises frame with pins pressed in)* |
| B | 4017/56 | Bearing Plate Fixing Block |
| C | 4017/59 | Ward Drum Spindle Support |
| D | 4017/42 | Suppressor Link Retainer |
| E | PW5484 | Special Washer *(5 max, quantity as required)* |
| F | 4017/63 | Lag Disk CP |
| G | RL1242 | Lag Disk Roller |
| H | 4017/41 | Roller Retaining Ring |
| J | PG7615 | Lag Disk Spring |
| K | 4017/61 | Ward Drum Sleeve |
| | 4017/89 | Answer Back Drum Assembly *includes:-* |
| L | 4017/69 | Ward Drum CP |
| M | 4216/1 TO 33 | Answer Back Wards *(see next column)* |
| N | 4017/68 | Cam Clamping Ring |
| O | 4017/67 | Latch Trip Cam |
| P | 4017/66 | Starting Lever Cam |
| Q | 4017/65 | Answer Back Drum Feed Ratchet |
| R | 4017/46 | Ward Drum Key |
| S | 4017/45 | Stop Plate Spacer |
| T | 4017/64 | Ward Drum Stop Plate |
| U | PN5136 | Special Nut |
| V | PW5849 | Special Washer *(5 max, quantity as required)* |
| W | PW5698 | Special Washer |
| X | 4017/52 | Selector Lever Spindle |
| | 4017/95 | Latch and Trip Lever CP *includes:-* |
| Y | 4017/71 | Trip Operating Bellcrank CP |
| Z | 4017/33 | Latch Adjusting Lever CP |
| AA | PW5508 | Shim *(0.005 in.) quantity as required* |
| AB | PS6547 | Adjustment Screw |
| AC | PG7619 | Tension Spring |
| AD | PP9277 | Suppressor Link Clamping Screw |
| AE | 4017/60 | Suppressor Link |
| AF | 4017/43 | Push Rod Suppressor CP |
| AG | 4017/35 | Push Rod Suppressor Spindle |
| AH | 4017/47 | Answer Back Selector Lever *(6 per unit)* |
| AJ | PB4632 | Collar *(5 per unit)* |
| AK | 4017/48 | Ratchet Retention Pawl CP |
| AL | PG7618 | Tension Spring |
| AM | 4017/17A | Lag Disk Release Pawl CP |
| AN | 4017/31 | Release Pawl Latch |
| AO | PG3278 | Special Spring |
| AP | 4017/80 | Trip Adjustment Lever |
| AQ | 4017/34 | Latch Trip Lever CP |
| AR | PG3279 | Latch Trip Lever Spring |
| AS | PW5682 | Special Washer |
| AT | 4017/32 | Release Lever Catch CP |
| AU | PG7616 | Tension Spring |
| | 4017/96 | Adjustment and Release Lever CP *includes:-* |
| AV | 4017/76 | Answer Back Release Lever CP |
| AW | 4017/51 | Adjustment Arm CP |
| AX | PG7679 | Tension Spring |
| AY | 4017/38 | Release Lever Spindle |
| AZ | 4017/77 | Trip Arm Guide |
| BA | 4017/75 | Release Lever Trip Arm CP |
| BB | PG7617 | Tension Spring |
| BC | 4017/49 | Trip Bellcrank Extension CP |
| BD | 4017/72 | 'Here Is' Trip Bellcrank |
| BE | 4017/50 | Trip Bellcrank Sleeve |

*THE FOLLOWING PARTS, REQUIRED ONLY WHEN THE ABOVE UNIT IS FITTED, DO NOT FORM PART OF S4017A ANSWER BACK UNIT*

| | | |
|---|---|---|
| | 4000/175 | Transfer Lever CP *includes:-* |
| BF | 4000/20 | Transfer Lever Bracket CP |
| BG | 4000/168 | Transfer Lever Sub CP |
| BH | 4000/169 | Transfer Lever Link |





# ANSWER BACK UNIT WARDS

The table below lists the wards which can be used in the Model Seventy Five Answer Back Unit.

The numbers in the column headed Signals Code indicate uncut divisions on the wards and these produce 'Mark' signals, the unnumbered spaces indicate cut away divisions and produce 'Space' signals. The diagram below of a twice full size ward shows the order of numbering the divisions. The letters, figures and symbols shown against each ward are those produced if the machine is arranged to operate on the International Code No.2. Each ward is stamped with the suffix of its part number.

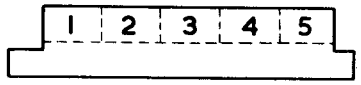


| SIGNALS CODE | PART NUMBER | | | SIGNALS CODE | PART NUMBER | | |
|---|---|---|---|---|---|---|---|
| 1 - - - - | 4216/20 | E | 3 | - 2 - - - | 4216/29 | LINE FEED | |
| 1 2 - - - | 4216/15 | A | - | - 2 3 - - | 4216/14 | I | 8 |
| 1 - 3 - - | 4216/8 | S | ' | - 2 - 4 - | 4216/18 | R | 4 |
| 1 - - 4 - | 4216/12 | D | | - 2 - - 5 | 4216/4 | L | ) |
| 1 - - - 5 | 4216/26 | Z | + | - 2 3 4 - | 4216/3 | C | : |
| 1 2 3 - - | 4216/13 | U | 7 | - 2 3 - 5 | 4216/6 | P | 0 |
| 1 2 - 4 - | 4216/7 | J | BELL | - 2 - 4 5 | 4216/10 | G | |
| 1 2 - - 5 | 4216/2 | W | 2 | - 2 3 4 5 | 4216/11 | V | = |
| 1 2 3 4 - | 4216/22 | K | ( | - - 3 - - | 4216/31 | SPACE | |
| 1 2 3 - 5 | 4216/24 | Q | 1 | - - 3 4 - | 4216/9 | N | , |
| 1 2 - 4 5 | 4216/27 | FIGURES | | - - 3 - 5 | 4216/19 | H | |
| 1 - 3 4 - | 4216/16 | F | | - - 3 4 5 | 4216/21 | M | • |
| 1 - 3 - 5 | 4216/25 | Y | 6 | - - - 4 - | 4216/30 | CARRIAGE RETURN | |
| 1 - 3 4 5 | 4216/17 | X | / | - - - 4 5 | 4216/1 | 0 | 9 |
| 1 - - 4 5 | 4216/23 | B | ? | - - - - 5 | 4216/5 | T | 5 |
| 1 2 3 4 5 | 4216/28 | LETTERS | | - - - - - | 4216/32 | ALL SPACE | |

In addition to the above, a blank is available, made from cast steel for ease of hardening, to enable customers to cut their own wards. The part number of this blank is 4216/33.

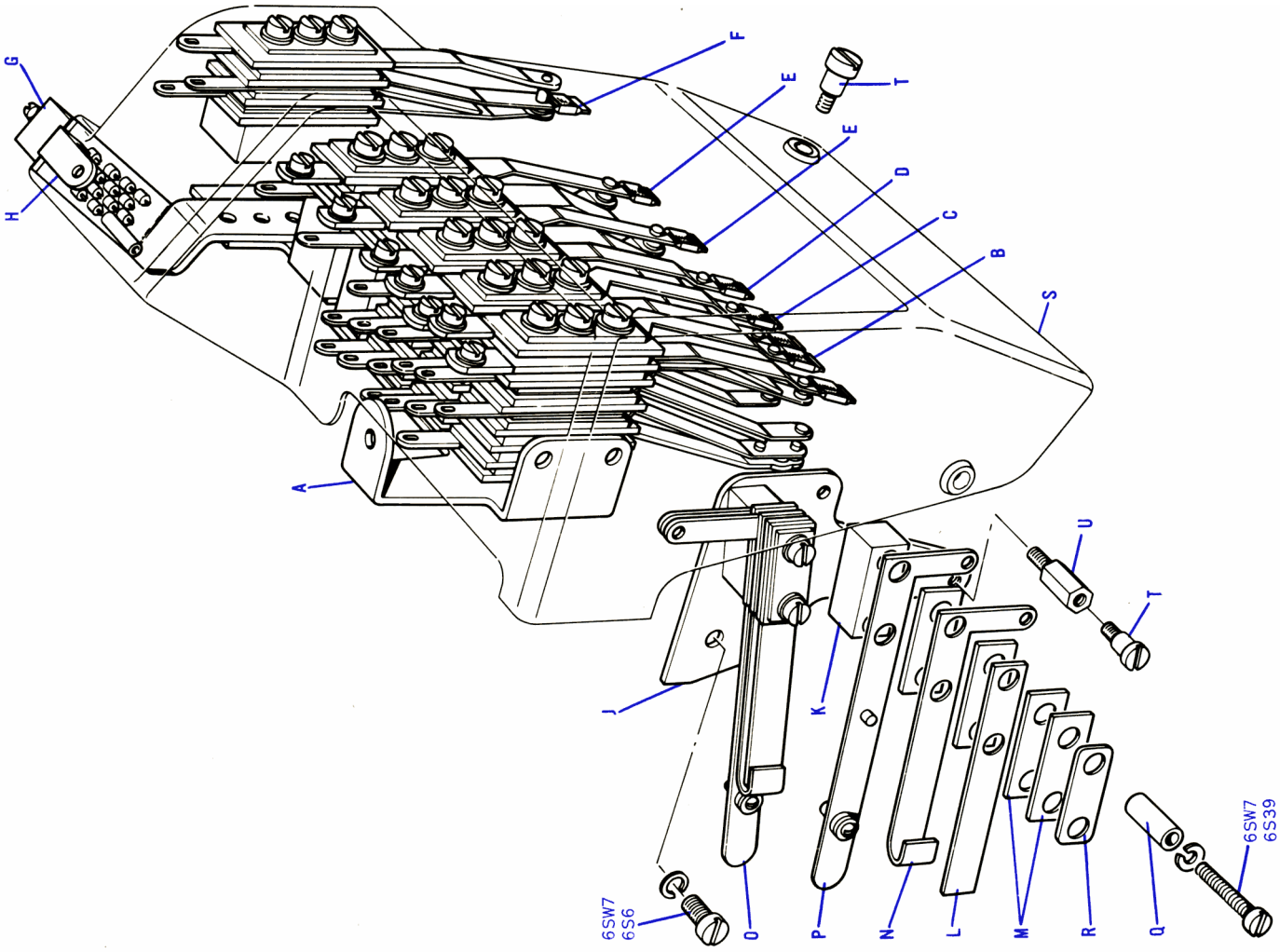


FIG. 7.37 TRANSMITTER UNIT S4016C

# TRANSMITTER UNIT S4016C

| *Index Letter* | *Part No.* | *Part Name* |
|---|---|---|
| A | 4275/22 | Contact Mounting Plate CP |
| CODE CONTACTS | | |
| B | 4016/33 | Contact Assembly 'A' CP |
| C | 4016/34 | Contact Assembly 'B' CP |
| D | 4016/35 | Contact Assembly 'C' CP |
| E | 4016/36 | Start and Stop Contact CP *(2 per unit)* |
| F | 4016/117 | Send/Receive Contact Assembly |
| G | BO 7733/1 | 18-way Plug *(McMurdo type MP118)* |
| H | 4016/75 | Cover Bracket CP |
| CONTROL CONTACTS | | |
| | 4016/113 | Contact CP *includes:-* |
| J | 4016/43 | Abutment and Control Plate |
| K | PE5117 | Spacing Block |
| L | 1835/29 | Alarm Buffer Spring |
| M | PE5004A | Insulator *(4 per contact bank)* |
| N | 4016/40 | Contact CP *(used in the upper position on Break* contacts and the lower position on Make* contacts)* |
| | *or* 1835/31 | Contact CP *(used in the lower position on Break* contacts and the upper position on Make* contacts)* |
| O | See table | Upper Contact Spring CP |
| P | next column | Lower Contact Spring CP |
| Q | PE1007A | Insulator *(2 per contact bank)* |
| R | 1835/28 | Switch Clamping Plate |
| S | 4151/308 | Transmitter Cover CP |
| T | PS5672 | Shouldered Screw *(3 per unit)* |
| U | PP7981 | Shouldered Pillar |

| | METHOD OF OPERATION | TYPE OF CONTACT* | LENGTH | PART NO. |
|---|---|---|---|---|
| Upper Contact Spring CP | Controlled by Bell Switch Arm operated by Function Bars 8 and or 9, or pulsed by Function Reset Bar CP | Break | 2.5/16" | 4016/42 |
| | | Make | 2.5/16" | 4016/105 |
| | Pulsed by Function Bar in position 8 | Break | 1.15/16" | 4016/96 |
| | | Make | 1.15/16" | 4016/111 |
| Lower Contact Spring CP | Controlled by WRU? Switch Arm operated by Function Bar 5, or pulsed by Function Reset Bar CP | Break | 2.5/16" | 4016/38A |
| | | Make | 2.5/16" | 4016/112 |
| | Pulsed by Function Bar in position 5 | Break | 1.15/16" | 4016/71A |
| | | Make | 1.15/16" | 4016/110 |

* *The 'Make' and 'Break' conditions referred to above apply when the contacts are removed from the machine*

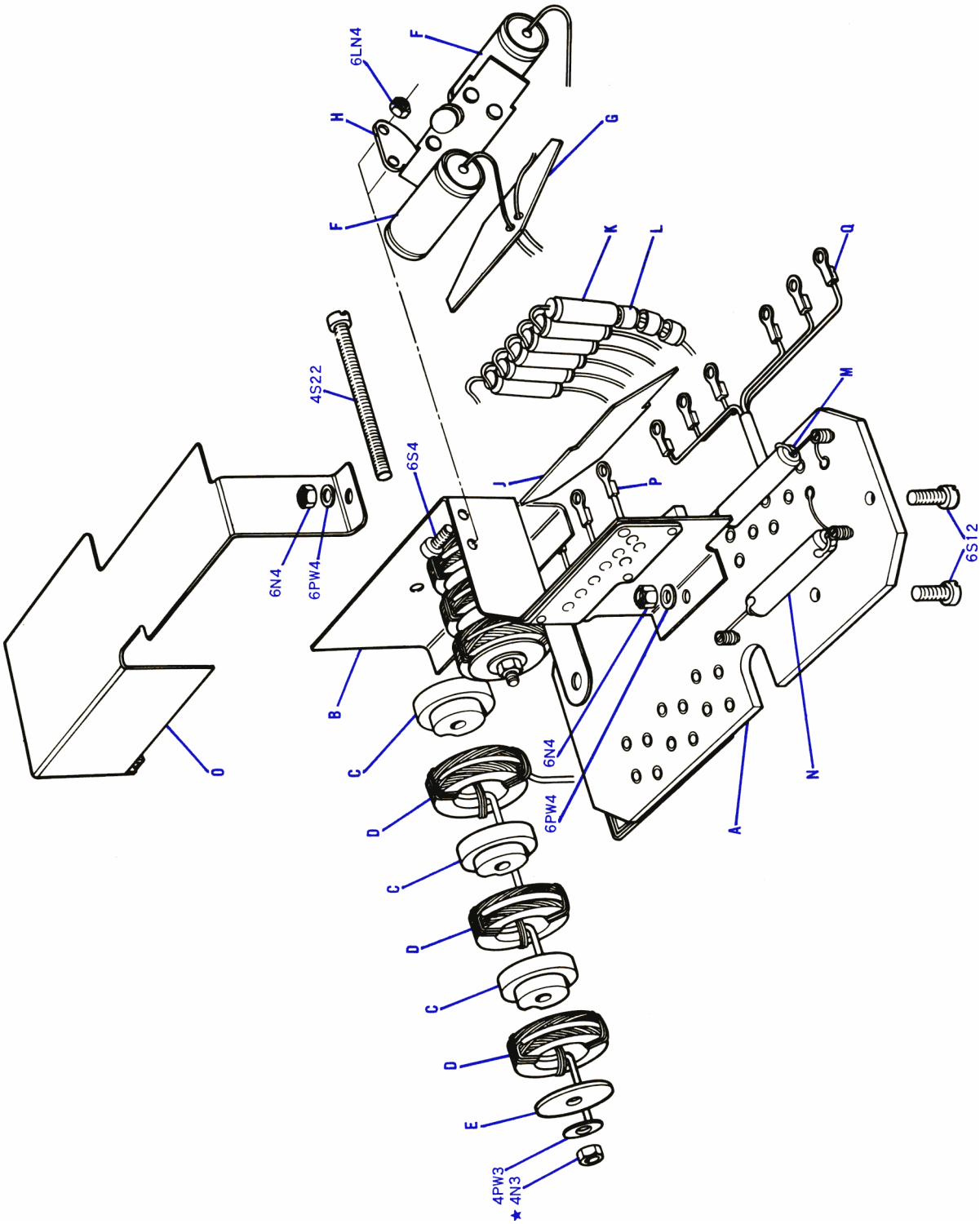


FIG. 7.38 SIGNALS RADIO INTERFERENCE SUPPRESSION UNIT 4275/33

## SIGNALS RADIO INTERFERENCE SUPPRESSION UNIT 4275/33

| *Index Letter* | *Part No.* | *Part Name* |
|---|---|---|
| | S3742 | Signals R.I.S. Box CP *includes:-* |
| A | 3742/9 | Signals R.I.S. Base CP |
| B | 3742/6 | Signals R.I.S. Screen CP |
| C | PE2008 | Insulating Bush } *6 off each per CP* |
| D | 2263/6 | Inductor Coil 530 μH } |
| E | PW5459 | Special Washer *(2 per CP)* |
| F | BO 2845 | Capacitor 0.1 μF 350V *(2 per CP)* |
| G | 3742/13 | Insulator |
| H | 3742/12 | Bracket CP |
| J | 3742/10 | Insulator |
| K | BO 3045 | Capacitor 0.005 μF 350V *(6 per CP)* |
| L | BO 1701 | Insulating Bead *(18 per unit)* |
| M | BO 2878/4 | Resistor 47 ohm, ± 5% 4½W |
| N | BO 3548/18 | Resistor 220 ohm, ± 5% 4½W |
| O | 3742/3 | Signals R.I.S. Cover CP |
| P | 4275/19 | R.I.S. Unit Connection Block Cableform CP |
| Q | 4275/20 | R.I.S. Unit Connection Block Cableform CP |

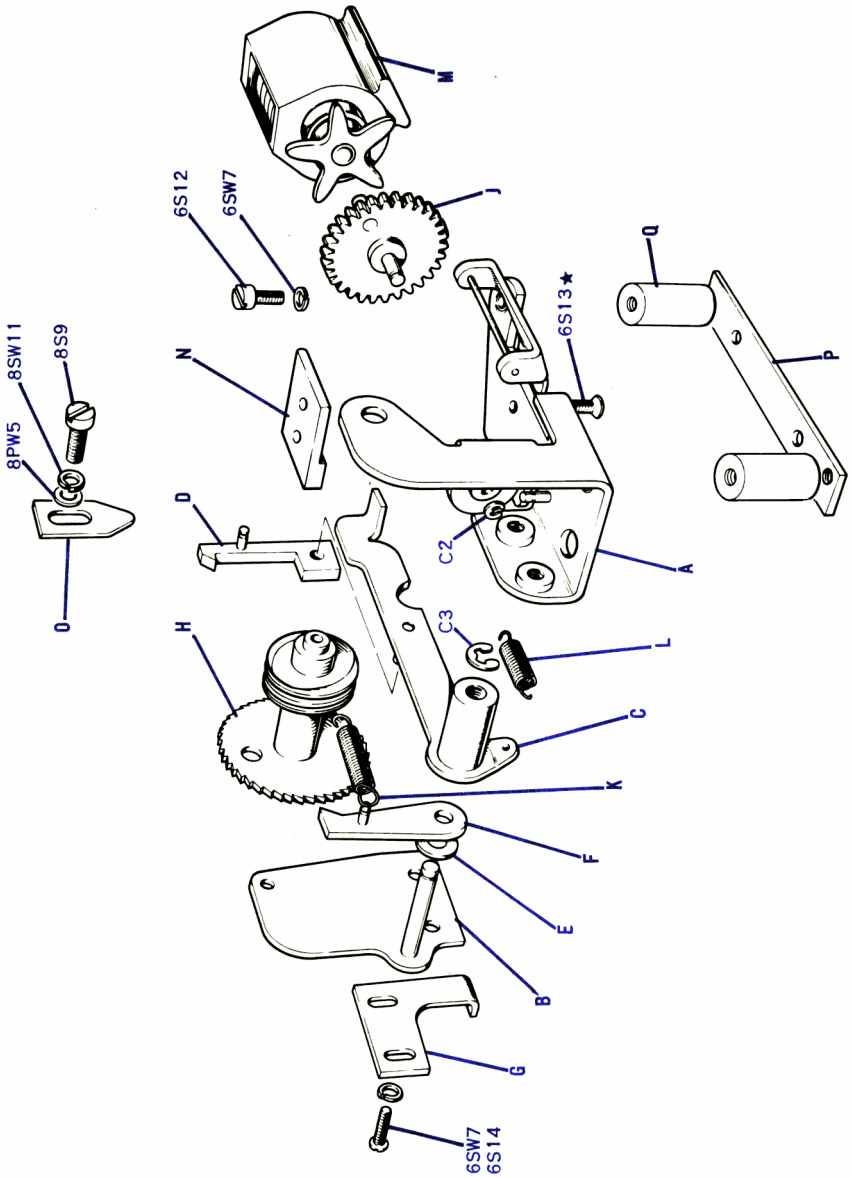


FIG. 7.39 OPERATION COUNTER S4020B

## OPERATION COUNTER S4020B

| *Index Letter* | *Part No.* | *Part Name* |
|---|---|---|
| A | 4020/1B | Mounting Plate Sub CP |
| | 4020/13 | Side Plate CP *includes:-* |
| B | 4020/11 | Side Plate Sub CP |
| | 4020/10 | Actuating Lever CP *includes:-* |
| C | 4020/7 | Actuating Lever Sub CP |
| D | 4020/9 | Pawl CP |
| E | PW5797 | Special Washer *(2 per CP)* |
| F | 4020/17 | Retention Pawl CP |
| G | 4020/18 | Side Plate Bracket |
| H | 4020/14 | Ratchet and Worm Shaft |
| J | 4020/4A | Worm Wheel CP |
| K | PG7531 | Tension Spring |
| L | PG7532 | Tension Spring |
| M | BO 2917/1 | Operation Counter |
| N | 4020/31 | Clamping Plate CP |
| O | 4020/20 | Compensator Cam Lever Extension |
| P | 4020/19B | Support Bar |
| Q | PB5093 | Bush *(2 per assembly)* |

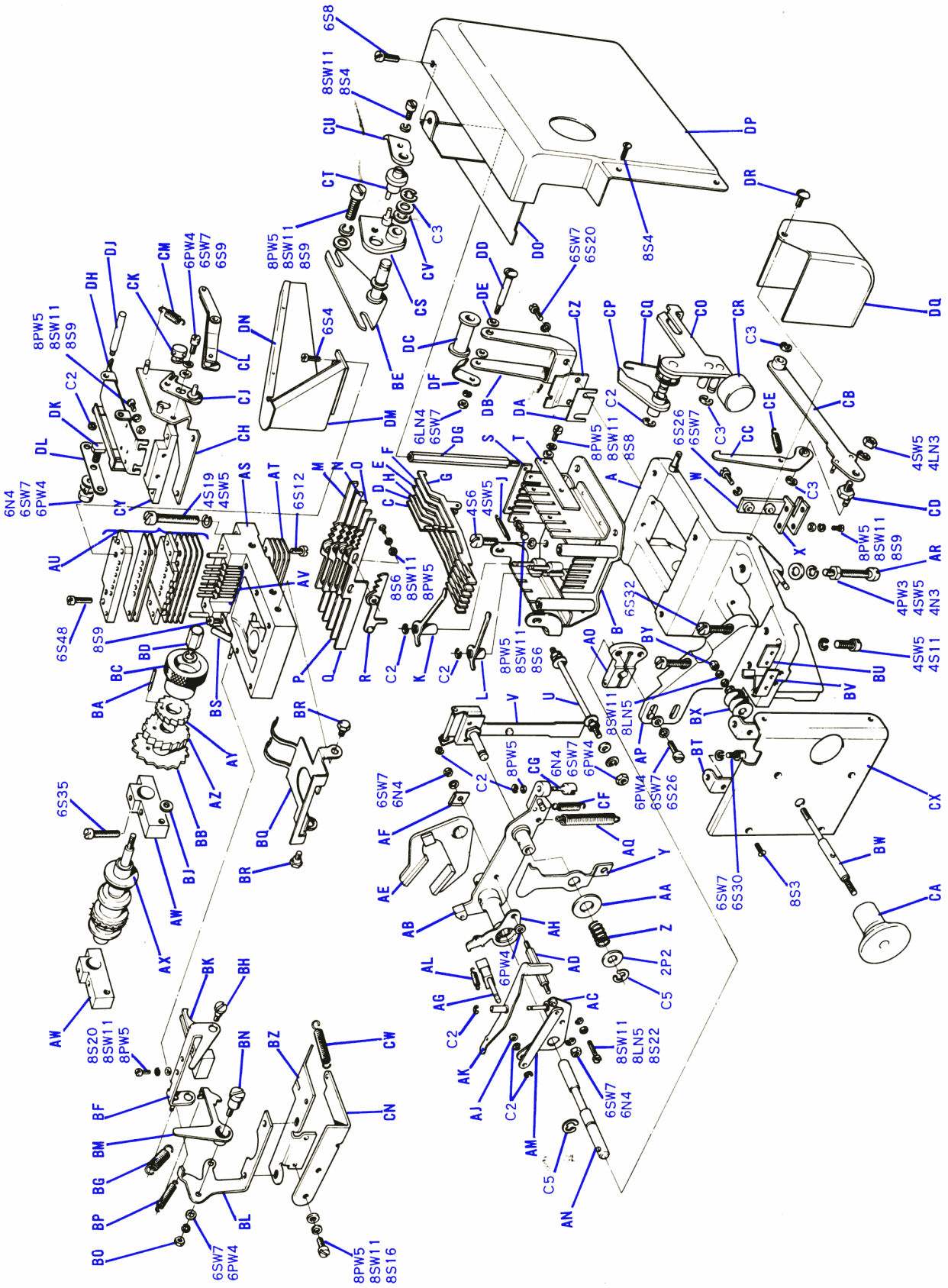


FIG. 7.40 REPERFORATING UNIT S4022A

# REPERFORATING UNIT S4022A { *GROUP 1 for Centre Feed Machines* / *GROUP 2 for Advance Feed Machines*

| *Index Letter* | *Part No.* | *Part Name* |
|---|---|---|
| A | 4022/2 | Reperforating Support Bracket CP *(comprises machined and enamelled casting with pins driven in)* |
| | 4242/50 | Base Plate Unit *includes:-* |
| B | 4242/51 | Base Plate and Racks CP |
| C | 4022/3 | Selector Bar No. 1 |
| D | 4022/4 | Selector Bar No. 2 |
| E | 4022/5 | Selector Bar No. 3 |
| F | 4022/6 | Selector Bar No. 4 |
| G | 4022/7 | Selector Bar No. 5 |
| H | 4022/8A | Feed Hole Interposer |
| J | PG7521 | Tension Spring *(5 per CP)* |
| K | 4022/19 | Selector Bellcrank (Upper) CP *(3 per CP)* |
| L | 4022/21 | Selector Bellcrank (Lower) CP *(2 per CP)* |
| M | 4022/22 | Push Rod No. 1 |
| N | 4022/23 | Push Rod No. 2 |
| O | 4022/24 | Push Rod No. 3 |
| P | 4022/25 | Push Rod No. 4 |
| Q | 4022/26 | Push Rod No. 5 |
| R | 4022/10 | Adjustment Plate CP *(5 per CP)* |
| S | 4022/27 | Retaining Plate *(short)* |
| T | 4022/28 | Retaining Plate *(long)* |
| U | 4022/81 | Retaining Rod |
| ANVIL AND RACK | | |
| V | 4022/71 | Anvil CP |
| W | 4022/77 | Guide Rack CP |
| X | 4022/80 | Retaining Plate |
| PUNCH WITHDRAWAL PLATE | | |
| Y | 4022/79 | Punch Withdrawal Plate |
| Z | PG5146 | Compression Spring |
| AA | PW5226 | Shim *(0.005 in.)* |
| PUNCHING ARM ASSEMBLY | | |
| | 4022/62 | Punching Arm Assembly *includes:-* |
| AB | 4022/49 | Punching Arm CP |
| AC | 4022/57 | Support Plate CP |
| AD | PP9198 | Flanged Pin |
| AE | 4022/53A | Driving Plate CP |
| AF | 4022/92A | Driving Plate Retainer |
| AG | 4022/60 | Interposer |
| AH | 4022/61 | Retainer |
| AJ | PW5736 | Special Washer |
| AK | 4022/55 | Reperforating Out Lever CP |
| AL | PG7527 | Tension Spring |
| AM | PG2165 | Spring |
| AN | 4014/146 | Special Pivot |
| AO | 4022/31 | Pivot Clamp |
| AP | 4022/78 | Clamp Block Support |
| AQ | PG7528 | Tension Spring |
| AR | PS6121 | Special Screw |
| PUNCH BLOCK | | |
| | 4022/66B GRP1 | Punch Block Head Sub CP (Centre Feed) } *includes:-* |
| | *or* 4022/66B GRP2 | Punch Block Head Sub CP (Advance Feed) } |
| AS | 4022/64A | Punch Block Head Casting CP |
| AT | 1947/275 | Bottom Guide Plate (Centre Feed) *4 per CP* |
| | *or* 1947/274 | Bottom Guide Plate (Advance Feed) *4 per CP* |
| | 4022/152 | Punch and Die Assembly (Centre Feed) } *includes:-* |
| | *or* 4022/153 | Punch and Die Assembly (Advance Feed) } |
| AU | 4022/150 | Die Assembly (Centre Feed) |
| | *or* 4022/151 | Die Assembly (Advance Feed) |
| AV | 4022/65 | Set of Punches |
| FEED SPINDLE AND RATCHET | | |
| AW | 1947/239B | Bearing Block RH and LH *(1 of each per unit)* |
| AX | 1947/263A | Feed Spindle CP |
| AY | 1947/268 | Feed Ratchet *(small diameter)* |
| AZ | 4022/129 | Feed Ratchet *(large diameter)* |
| BA | PP6809 | Special Parallel Pin |
| BB | 4022/84 | Retention Wheel |
| BC | KN1032 | Feed Wheel Knob |
| BD | PN5038 | Special Nut |
| BE | 4242/25 | Support Pin |

| *Index Letter* | *Part No.* | *Part Name* |
|---|---|---|
| TAPE GUIDE, FRAME AND STRIPPER | | |
| BF | 1947/317A | Tape Guide Frame CP |
| BG | PG7388A | Tension Spring |
| BH | PS5640 | Special Screw *(2 per CP)* |
| BJ | PW5649 | Special Washer |
| BK | 1947/323A | Tape Guide |
| BL | 1947/321A | Latch Support |
| BM | 1947/318 | Tape Guide Frame Latch CP |
| BN | PS5637 | Eccentric Screw |
| BO | PN5107 | Special Nut |
| BP | PG7078 | Tension Spring |
| BQ | 1947/319A | Stripper Spring |
| BR | PS5138 | Pivot Screw *(2 per CP)* |
| BS | PG2123 | Stripper Lift Spring |
| INTERPOSING ROD AND SUPPORT | | |
| BT | 4022/30A | Support Bracket CP |
| BU | 4022/108 | Support Plate |
| BV | PG2139 | Control Spring |
| BW | PS7174 | Control Rod |
| BX | 4022/107 | Retaining Sleeve |
| BY | PN5106 | Special Nut |
| BZ | 4242/24 | Pawl Guide |
| CA | KN1034A | Knob |
| FEED LEVER AND PAWL | | |
| CB | 4022/43 | Feed Lever CP |
| CC | 4022/41 | Feed Pawl CP |
| CD | EC1590 | Eccentric |
| CE | PG7525A | Tension Spring |
| CF | PG7526B | Tension Spring |
| CG | 4022/82 | Joint Piece |
| RETENTION LEVER | | |
| CH | 4022/75 | Retention Lever Bracket CP |
| CJ | 1947/79 | Adjusting Arm CP |
| CK | EC5040 | Eccentric |
| CL | 4022/132 | Retention Lever CP |
| CM | PG7669 | Tension Spring |
| BACKSPACE MECHANISM | | |
| CN | 4242/1 | Back Spacing Pawl Guide |
| | 4242/5 | Pawl Carrier Assembly *includes:-* |
| CO | 4242/6 | Pawl Carrier CP |
| CP | 4242/8 | Back Space Pawl CP |
| CQ | PG3304 | Torsion Spring |
| CR | KB1006 | Key Button |
| CS | 4242/2 | Eccentric Carrier CP |
| CT | EC1624 | Eccentric |
| CU | 4242/4 | Clamp Plate |
| CV | PW5694 | Washer *(2 per unit)* |
| CW | PG7176 | Tension Spring |
| CX | 4022/37B | Front Guide Plate |
| TAPE GUIDE AND ROLLER | | |
| CY | 4022/104 | Mounting Block |
| CZ | 4022/96A | Stop Plate |
| DA | 4022/97 | Shim *(as required)* |
| DB | 4022/86 | Roller Bracket |
| DC | 3886/142 | Tape Roller |
| DD | PS5687A | Shouldered Screw |
| DE | PW5691 | Special Washer *(2 per unit)* |
| DF | 4014/115 | Tape Retainer |
| DG | 4022/87 | Cover Pillar |
| *The following parts, required when a Reperforating Attachment is fitted, do not form part of S4022A Reperforating Unit* | | |
| | 4022/147 | Lateral Tape Guide CP *includes:-* |
| DH | 4022/142 | Lateral Tape Guide 1st CP |
| DJ | 4022/102 | Tape Retainer |
| | 4022/146 | Guide Spring CP *includes:-* |
| DK | 4022/144 | Guide Shoe |
| DL | 4022/145 | Guide Spring |
| DM | 4022/135 | Cuttings Chute CP |
| DN | 4022/138 | Cuttings Chute Cover |
| DO | 4022/88 | Reperforating Top Cover |
| DP | 4022/139 | Reperforating Side Cover CP |
| DQ | 4022/93 | Side Cover |
| DR | PS5289 | Special Screw |

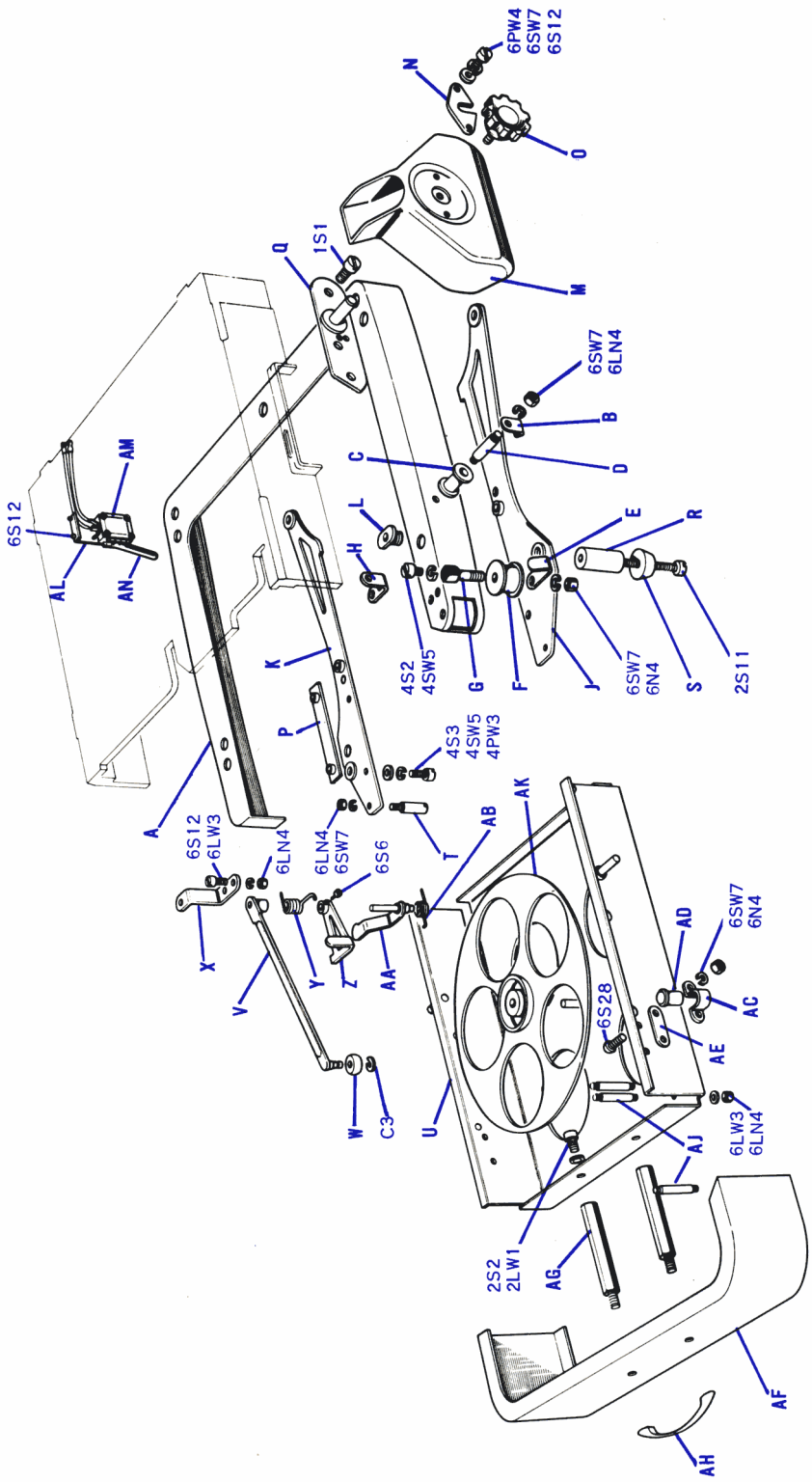


FIG. 7.41 TAPE DRAWER AND DUMMY PLINTH

# TAPE DRAWER AND DUMMY PLINTH

| *Index Letter* | *Part No.* | *Part Name* |
|---|---|---|
| | 4014/152A | Dummy Plinth CP *includes:-* |
| A | 4014/79 | Dummy Plinth |
| B | 4014/115 | Tape Retainer |
| C | 3886/142 | Tape Roller |
| D | PP9162 | Flanged Pin |
| E | 4014/99 | Tape Retainer |
| F | 4014/110 | Tape Roller |
| G | 4014/80 | Flanged Pin |
| H | 4014/113 | Cover Bracket |
| J | 4014/81 | Draw Runner (RH) CP |
| K | 4014/83 | Draw Runner (LH) CP |
| L | PB4916 | Special Bush *(4 per CP)* |
| | *or* PB4971 | Special Bush *(used when machine fitted with Guide Rail 4000/50A)* |
| | 4014/433 | Cuttings Box CP *includes:-* |
| M | 4014/431 | Cuttings Box Sub CP |
| N | 4014/106 | Knob Retaining Plate |
| O | 4014/405 | Cuttings Box Knob |
| P | 4014/209 | Drawer Guide CP |
| Q | 4014/402 | Cuttings Box Bracket CP |
| R | 4014/111 | Pillar *(4 per unit)* |
| S | RB1020 | Rubber Foot *(4 per unit)* |
| T | 4014/112 | Threaded Pin *(2 per unit)* |

| *Index Letter* | *Part No.* | *Part Name* |
|---|---|---|
| | 4014/87 | Tape Drawer 2nd CP *includes:-* |
| U | 4014/88 | Tape Drawer 1st CP |
| V | 4014/118 | Tape Follower Lever CP |
| W | 3751/3 | Roller |
| X | 4014/122 | Bearing Bracket |
| Y | PG3225 | Torsion Spring |
| Z | 4014/116 | Stop Frame CP |
| AA | 4014/120 | Switch Operating Lever CP |
| AB | PG3224 | Torsion Spring |
| AC | 4014/92 | Clip |
| AD | BO 4040/1 | Spring Ball Catch } *2 off each per CP* |
| AE | 4014/91 | Packing Piece |
| AF | 4014/89 | Tape Drawer Front *(for machines having 4-row keyboard)* |
| | *or* 4014/139 | Tape Drawer Front *(for machines having 3-row keyboard)* |
| | *or* 4014/141 | Tape Drawer Front *(for receiver only machines)* |
| AG | 4014/90A | Drawer Front Pillar *(2 per unit) for machines having 4-row keyboard* |
| | *or* 4014/138A | Drawer Front Pillar *(2 per unit) for machines having 3-row keyboard* |
| AH | BO 8000/3 | Drawer Handle |
| AJ | PP5612 | Tape Pin *(3 per CP for keyboard machines or 2 per CP for receiver only machines)* |
| AK | 4014/145A | Tape Wheel CP |
| AL | 4014/123 | Switch Bracket |
| AM | 4014/153 | Microswitch and Connector CP |
| AN | BO 3564/2 | Microswitch Operating Attachment |

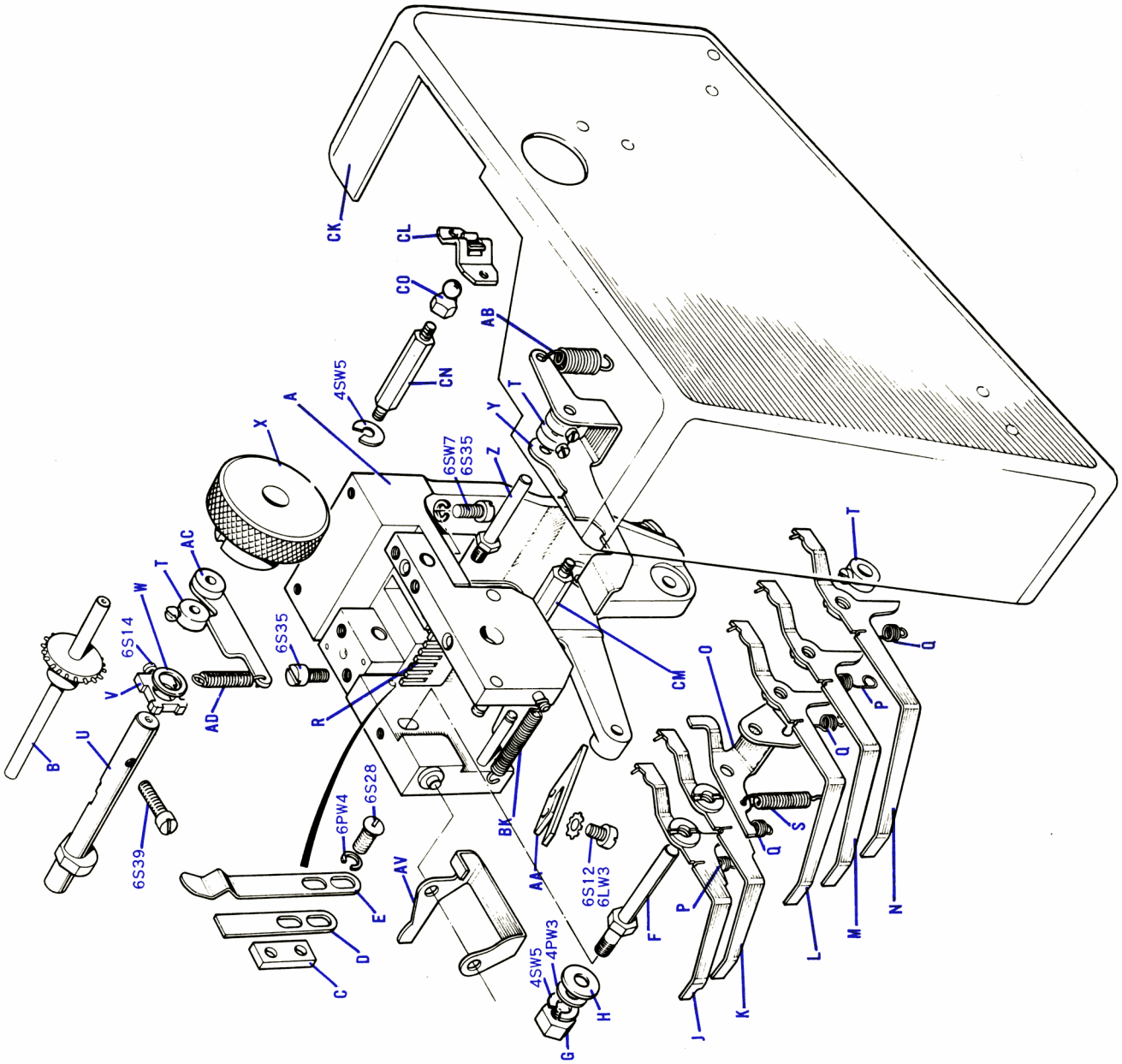


FIG. 7.42 TAPE READER UNIT S4151

# TAPE READER UNIT S4151

| *Index Letter* | *Part No.* | *Part Name* |
|---|---|---|
| A | 4151/264 GRP1 | Tape Reader Casting Sub Assembly *includes:-* |
| B | 4151/91 | Tape Feed Spindle |
| C | 4151/116 | Spacer |
| D | PG2163 | Backing Spring |
| E | PG3313B | Tape Gate Spring |
| | 4151/344 | Peckers and Tape Out Seekers CP *includes:-* |
| F | PP5658 | Pecker Pivot |
| G | PN5138 | Special Nut *(4 BA)* |
| H | PW5649 | Special Washer |
| J | 4151/74 | No. 1 Pecker CP |
| K | 4151/73 | No. 2 Pecker CP |
| L | 4151/72 | No. 3 Pecker CP |
| M | 4151/71 | No. 4 Pecker CP |
| N | 4151/70 | No. 5 Pecker CP |
| O | 4151/75B | Tape Out Seeker |
| P | PG7667 | Peckers Spring Short *(for Peckers numbers 1 and 4)* |
| Q | PG7666 | Peckers Spring Long *(for Peckers numbers 2, 3 and 5)* |
| R | 4151/109 | Peckers Rack |
| S | PG7668 | Tape Out Spring |
| T | CS1021 | Set Collar and Screw *(3 per assembly)* |
| U | 4151/270A | Switch Camshaft |
| V | 4151/105 | Jockey Cam |
| W | PW5754 | Washer |
| X | 4151/251A | Switch Knob |
| Y | 4151/110 | Code Bar Suppressor |
| Z | PP5662 | Pivot Pin |
| AA | 4151/302 | Code Bar Suppressor Guide |
| AB | PG7639 | Tension Spring |
| AC | 4151/104 | Jockey Lever CP |
| AD | PG7638 | Tension Spring |
| | 4151/221 | Tape Plate Assembly *includes:-* |
| AE | 4151/124 | Tape Plate Final CP |
| AF | 4151/115 | Bearing Block |
| AG | PG3312 | Torsion Spring |
| AH | 4151/263 | Side Plate CP |
| AJ | PP5663 | Latch Pin |
| AK | 4151/304 | Tape Gate CP |
| AL | CS1011 | Set Collar and Screw |
| AM | 4151/58 | Taut Tape Arm |
| AN | 4151/54 | Taut Tape Lever CP |
| AO | 4151/59 | Roller Bracket |
| AP | KN1038 | Knob |
| AQ | PS7176 | Special Screw |
| AR | RL1250 | Roller *(Long)* } *2 off each per unit* |
| AS | RL1251 | Roller *(Short)* } |
| AT | 4151/56 | Jockey Lever CP |
| AU | PG3300A | Torsion Spring |

| *Index Letter* | *Part No.* | *Part Name* |
|---|---|---|
| AV | 4151/76 | Tape Out Frame |
| | 4151/220 | Code Bars Assembly *includes:-* |
| AW | 4151/77 | Top Rack |
| AX | 4151/288 | Strap |
| AY | 4151/127 | Code Bar *(6 per unit)* |
| AZ | 4151/128 | Taut Tape Bar |
| BA | 4151/126 | Trip Bar |
| BB | 4151/162 | Top Retaining Plate CP |
| BC | 4151/161 | Rack Plate |
| BD | PP5657 | Spring Anchor |
| BE | 4151/80 | Bearing Bracket CP |
| BF | 4151/49 | Lower Guide Bracket |
| BG | 4151/48 | Retaining Plate |
| BH | 4151/160 | Transfer Lever CP |
| BJ | PG3311 | Torsion Spring |
| BK | PG7644 | Tension Spring |
| BL | PG7101 | Tension Spring |
| BM | PB4913 | Spacing Bush |
| BN | 4151/89 | Ratchet |
| BO | 4151/90 | Clamp |
| BP | PP5665 | Retention Lever Pivot |
| BQ | 4151/98 | Retention Lever CP |
| BR | PP5661 | Retention Roller Pivot |
| BS | RL1252 | Retention Roller |
| BT | PG7145A | Tension Spring |
| BU | PP5659 | Feed Arm Pivot |
| | 4151/219 | Feed Lever Sub Assembly *includes:-* |
| BV | 4151/83 | Feed Lever CP |
| BW | 4151/81 | Feed Pawl |
| BX | PG3299 | Torsion Spring |
| BY | 4151/86 | Feed Link CP |
| BZ | 4151/87 | Feed Latch |
| CA | PG3301 | Torsion Spring |
| CB | PB4903 | Spacer *(Long)* } *2 off each per unit* |
| CC | 4151/92 | Guide Plate } |
| CD | PB4902 | Spacer *(Short)* } |
| CE | PG7442 | Tension Spring |
| CF | EC5094 | Eccentric |
| CG | PP5660 | Pivot Pin |
| CH | 4151/84 | Feed Suppression Lever |
| CJ | PG7029 | Tension Spring |
| CK | 4151/173 | Cover *(for machines with Reperforating Attachment)* |
| | *or* 4151/254 | Cover CP *(for machines without Reperforating Attachment)* *includes:-* |
| CL | BO 8310/1 | Spring Latch *(3 per set)* |
| CM | PP9299 | Pillar *(4 BA Hex. - 1.7/16 in. long)* } *for use with cover 4151/254* |
| | PP9300 | Pillar *(2 BA Hex. - 2.1/32 in. long) not shown assembled to Main Base* } |
| CN | PP9301 | Pillar *(4 BA Hex. - 1.9/16 in. long)* } |
| CO | BO 8310/2 | Stud *(3 per set)* } |

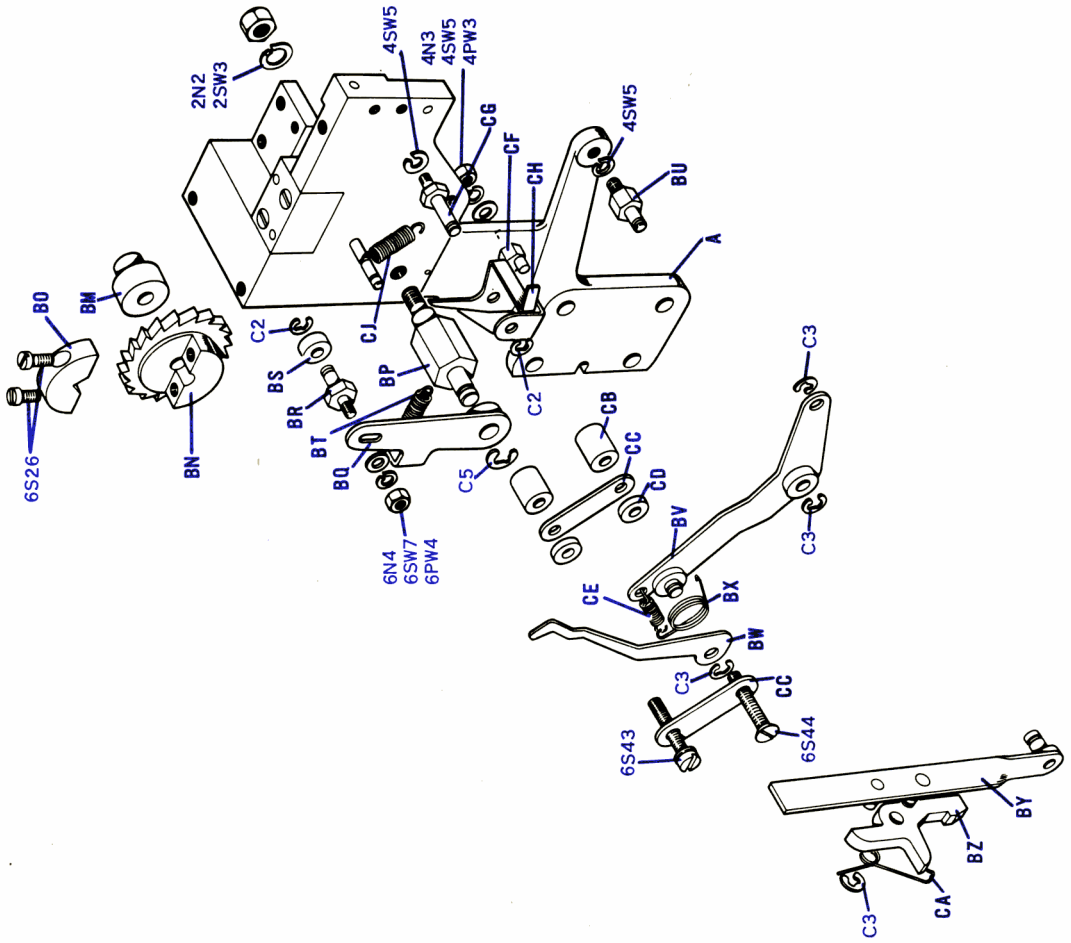


FIG. 7.43 TAPE READER UNIT S4151

# TAPE READER UNIT S4151

| *Index Letter* | *Part No.* | *Part Name* |
|---|---|---|
| A | 4151/264 GRP1 | Tape Reader Casting Sub Assembly *includes:-* |
| B | 4151/91 | Tape Feed Spindle |
| C | 4151/116 | Spacer |
| D | PG2163 | Backing Spring |
| E | PG3313B | Tape Gate Spring |
| | 4151/344 | Peckers and Tape Out Seekers CP *includes:-* |
| F | PP5658 | Pecker Pivot |
| G | PN5138 | Special Nut *(4 BA)* |
| H | PW5649 | Special Washer |
| J | 4151/74 | No. 1 Pecker CP |
| K | 4151/73 | No. 2 Pecker CP |
| L | 4151/72 | No. 3 Pecker CP |
| M | 4151/71 | No. 4 Pecker CP |
| N | 4151/70 | No. 5 Pecker CP |
| O | 4151/75B | Tape Out Seeker |
| P | PG7667 | Peckers Spring Short *(for Peckers numbers 1 and 4)* |
| Q | PG7666 | Peckers Spring Long *(for Peckers numbers 2, 3 and 5)* |
| R | 4151/109 | Peckers Rack |
| S | PG7668 | Tape Out Spring |
| T | CS1021 | Set Collar and Screw *(3 per assembly)* |
| U | 4151/270A | Switch Camshaft |
| V | 4151/105 | Jockey Cam |
| W | PW5754 | Washer |
| X | 4151/251A | Switch Knob |
| Y | 4151/110 | Code Bar Suppressor |
| Z | PP5662 | Pivot Pin |
| AA | 4151/302 | Code Bar Suppressor Guide |
| AB | PG7639 | Tension Spring |
| AC | 4151/104 | Jockey Lever CP |
| AD | PG7638 | Tension Spring |
| | 4151/221 | Tape Plate Assembly *includes:-* |
| AE | 4151/124 | Tape Plate Final CP |
| AF | 4151/115 | Bearing Block |
| AG | PG3312 | Torsion Spring |
| AH | 4151/263 | Side Plate CP |
| AJ | PP5663 | Latch Pin |
| AK | 4151/304 | Tape Gate CP |
| AL | CS1011 | Set Collar and Screw |
| AM | 4151/58 | Taut Tape Arm |
| AN | 4151/54 | Taut Tape Lever CP |
| AO | 4151/59 | Roller Bracket |
| AP | KN1038 | Knob |
| AQ | PS7176 | Special Screw |
| AR | RL1250 | Roller *(Long)* } 2 *off each per unit* |
| AS | RL1251 | Roller *(Short)* } |
| AT | 4151/56 | Jockey Lever CP |
| AU | PG3300A | Torsion Spring |

| *Index Letter* | *Part No.* | *Part Name* |
|---|---|---|
| AV | 4151/76 | Tape Out Frame |
| | 4151/220 | Code Bars Assembly *includes:-* |
| AW | 4151/77 | Top Rack |
| AX | 4151/288 | Strap |
| AY | 4151/127 | Code Bar *(6 per unit)* |
| AZ | 4151/128 | Taut Tape Bar |
| BA | 4151/126 | Trip Bar |
| BB | 4151/162 | Top Retaining Plate CP |
| BC | 4151/161 | Rack Plate |
| BD | PP5657 | Spring Anchor |
| BE | 4151/80 | Bearing Bracket CP |
| BF | 4151/49 | Lower Guide Bracket |
| BG | 4151/48 | Retaining Plate |
| BH | 4151/160 | Transfer Lever CP |
| BJ | PG3311 | Torsion Spring |
| BK | PG7644 | Tension Spring |
| BL | PG7101 | Tension Spring |
| BM | PB4913 | Spacing Bush |
| BN | 4151/89 | Ratchet |
| BO | 4151/90 | Clamp |
| BP | PP5665 | Retention Lever Pivot |
| BQ | 4151/98 | Retention Lever CP |
| BR | PP5661 | Retention Roller Pivot |
| BS | RL1252 | Retention Roller |
| BT | PG7145A | Tension Spring |
| BU | PP5659 | Feed Arm Pivot |
| | 4151/219 | Feed Lever Sub Assembly *includes:-* |
| BV | 4151/83 | Feed Lever CP |
| BW | 4151/81 | Feed Pawl |
| BX | PG3299 | Torsion Spring |
| BY | 4151/86 | Feed Link CP |
| BZ | 4151/87 | Feed Latch |
| CA | PG3301 | Torsion Spring |
| CB | PB4903 | Spacer *(Long)* } 2 *off each per unit* |
| CC | 4151/92 | Guide Plate } |
| CD | PB4902 | Spacer *(Short)* } |
| CE | PG7442 | Tension Spring |
| CF | EC5094 | Eccentric |
| CG | PP5660 | Pivot Pin |
| CH | 4151/84 | Feed Suppression Lever |
| CJ | PG7029 | Tension Spring |
| CK | 4151/173 | Cover *(for machines with Reperforating Attachment)* |
| | *or* 4151/254 | Cover CP *(for machines without Reperforating Attachment) includes:-* |
| CL | BO 8310/1 | Spring Latch *(3 per set)* |
| CM | PP9299 | Pillar *(4 BA Hex. - 1.7/16 in. long)* } *for use with cover 4151/254* |
| | PP9300 | Pillar *(2 BA Hex. - 2.1/32 in. long) not shown assembled to Main Base* } |
| CN | PP9301 | Pillar *(4 BA Hex. - 1.9/16 in. long)* } |
| CO | BO 8310/2 | Stud *(3 per set)* } |

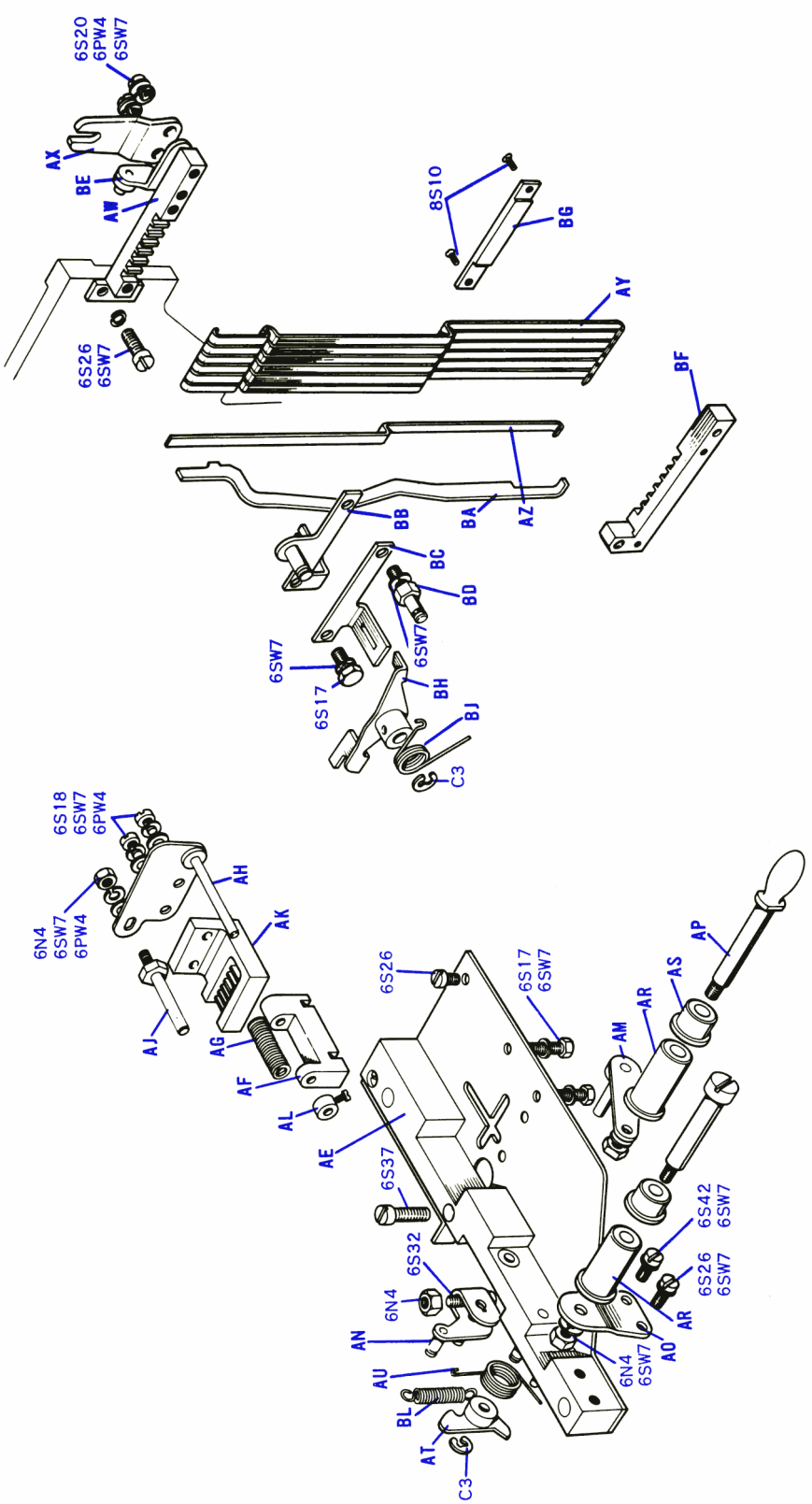


FIG. 7.44 TAPE READER UNIT S4151

# TAPE READER UNIT S4151

| Index Letter | Part No. | Part Name |
|---|---|---|
| A | 4151/264 GRP1 | Tape Reader Casting Sub Assembly *includes:-* |
| B | 4151/91 | Tape Feed Spindle |
| C | 4151/116 | Spacer |
| D | PG2163 | Backing Spring |
| E | PG3313B | Tape Gate Spring |
| | 4151/344 | Peckers and Tape Out Seekers CP *includes:-* |
| F | PP5658 | Pecker Pivot |
| G | PN5138 | Special Nut *(4 BA)* |
| H | PW5649 | Special Washer |
| J | 4151/74 | No. 1 Pecker CP |
| K | 4151/73 | No. 2 Pecker CP |
| L | 4151/72 | No. 3 Pecker CP |
| M | 4151/71 | No. 4 Pecker CP |
| N | 4151/70 | No. 5 Pecker CP |
| O | 4151/75B | Tape Out Seeker |
| P | PG7667 | Peckers Spring Short *(for Peckers numbers 1 and 4)* |
| Q | PG7666 | Peckers Spring Long *(for Peckers numbers 2, 3 and 5)* |
| R | 4151/109 | Peckers Rack |
| S | PG7668 | Tape Out Spring |
| T | CS1021 | Set Collar and Screw *(3 per assembly)* |
| U | 4151/270A | Switch Camshaft |
| V | 4151/105 | Jockey Cam |
| W | PW5754 | Washer |
| X | 4151/251A | Switch Knob |
| Y | 4151/110 | Code Bar Suppressor |
| Z | PP5662 | Pivot Pin |
| AA | 4151/302 | Code Bar Suppressor Guide |
| AB | PG7639 | Tension Spring |
| AC | 4151/104 | Jockey Lever CP |
| AD | PG7638 | Tension Spring |
| | 4151/221 | Tape Plate Assembly *includes:-* |
| AE | 4151/124 | Tape Plate Final CP |
| AF | 4151/115 | Bearing Block |
| AG | PG3312 | Torsion Spring |
| AH | 4151/263 | Side Plate CP |
| AJ | PP5663 | Latch Pin |
| AK | 4151/304 | Tape Gate CP |
| AL | CS1011 | Set Collar and Screw |
| AM | 4151/58 | Taut Tape Arm |
| AN | 4151/54 | Taut Tape Lever CP |
| AO | 4151/59 | Roller Bracket |
| AP | KN1038 | Knob |
| AQ | PS7176 | Special Screw |
| AR | RL1250 | Roller *(Long)* } *2 off each per unit* |
| AS | RL1251 | Roller *(Short)* } |
| AT | 4151/56 | Jockey Lever CP |
| AU | PG3300A | Torsion Spring |

| Index Letter | Part No. | Part Name |
|---|---|---|
| AV | 4151/76 | Tape Out Frame |
| | 4151/220 | Code Bars Assembly *includes:-* |
| AW | 4151/77 | Top Rack |
| AX | 4151/288 | Strap |
| AY | 4151/127 | Code Bar *(6 per unit)* |
| AZ | 4151/128 | Taut Tape Bar |
| BA | 4151/126 | Trip Bar |
| BB | 4151/162 | Top Retaining Plate CP |
| BC | 4151/161 | Rack Plate |
| BD | PP5657 | Spring Anchor |
| BE | 4151/80 | Bearing Bracket CP |
| BF | 4151/49 | Lower Guide Bracket |
| BG | 4151/48 | Retaining Plate |
| BH | 4151/160 | Transfer Lever CP |
| BJ | PG3311 | Torsion Spring |
| BK | PG7644 | Tension Spring |
| BL | PG7101 | Tension Spring |
| BM | PB4913 | Spacing Bush |
| BN | 4151/89 | Ratchet |
| BO | 4151/90 | Clamp |
| BP | PP5665 | Retention Lever Pivot |
| BQ | 4151/98 | Retention Lever CP |
| BR | PP5661 | Retention Roller Pivot |
| BS | RL1252 | Retention Roller |
| BT | PG7145A | Tension Spring |
| BU | PP5659 | Feed Arm Pivot |
| | 4151/219 | Feed Lever Sub Assembly *includes:-* |
| BV | 4151/83 | Feed Lever CP |
| BW | 4151/81 | Feed Pawl |
| BX | PG3299 | Torsion Spring |
| BY | 4151/86 | Feed Link CP |
| BZ | 4151/87 | Feed Latch |
| CA | PG3301 | Torsion Spring |
| CB | PB4903 | Spacer *(Long)* } *2 off each per unit* |
| CC | 4151/92 | Guide Plate } |
| CD | PB4902 | Spacer *(Short)* } |
| CE | PG7442 | Tension Spring |
| CF | EC5094 | Eccentric |
| CG | PP5660 | Pivot Pin |
| CH | 4151/84 | Feed Suppression Lever |
| CJ | PG7029 | Tension Spring |
| CK | 4151/173 | Cover *(for machines with Reperforating Attachment)* |
| | *or* 4151/254 | Cover CP *(for machines without Reperforating Attachment) includes:-* |
| CL | BO 8310/1 | Spring Latch *(3 per set)* |
| CM | PP9299 | Pillar *(4 BA Hex. - 1.7/16 in. long)* } *for use with cover 4151/254* |
| | PP9300 | Pillar *(2 BA Hex. - 2.1/32 in. long) not shown assembled to Main Base* } |
| CN | PP9301 | Pillar *(4 BA Hex. - 1.9/16 in. long)* } |
| CO | BO 8310/2 | Stud *(3 per set)* |

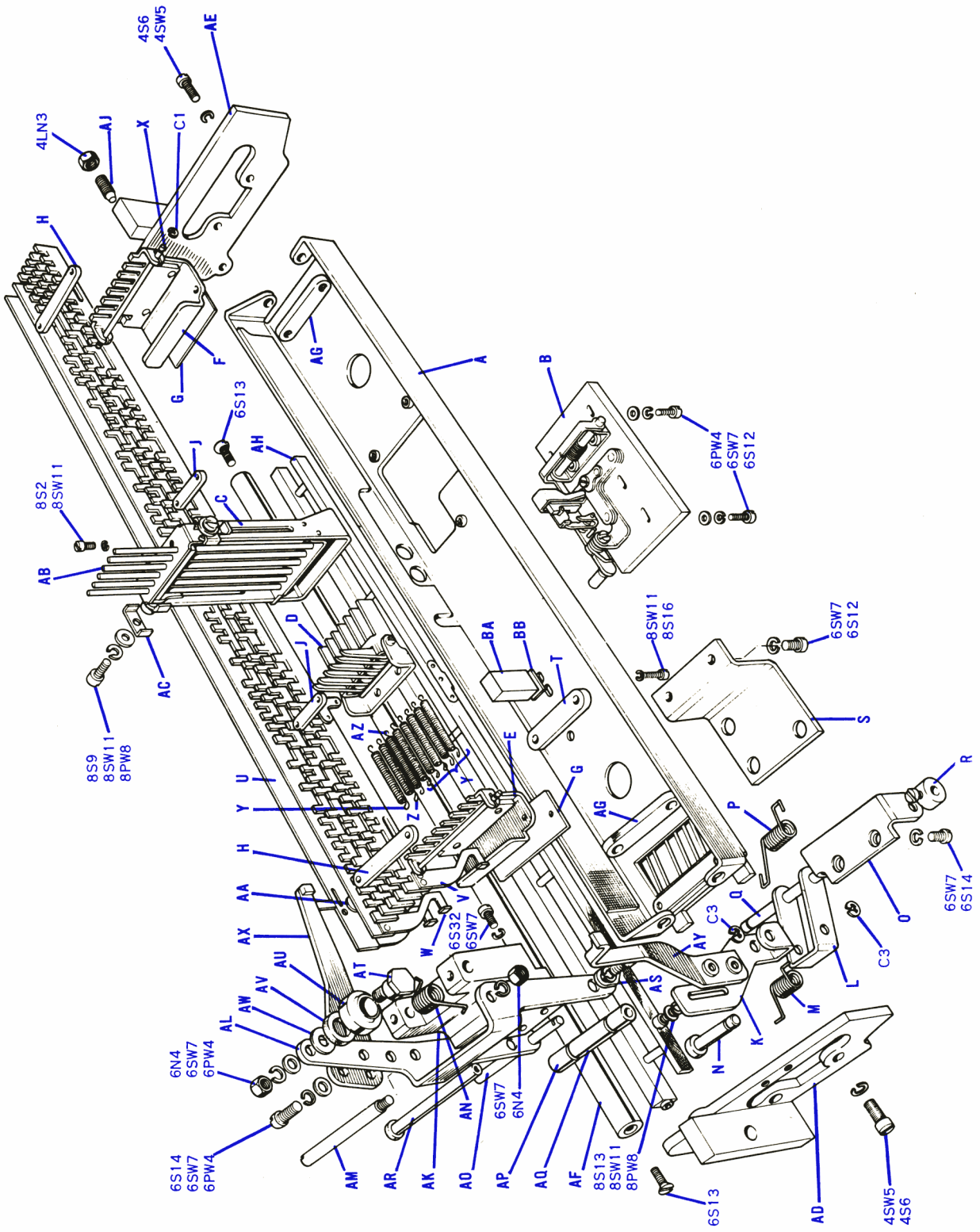


FIG. 7.45 TAPE READER KEYBOARD LINKAGE SYSTEM FOR RECEIVER ONLY MACHINES

## TAPE READER LINKAGE SYSTEM FOR RECEIVER ONLY MACHINES

*When the Tape Reader Attachment is fitted to a machine without a Keyboard a linkage system is fitted between the Selector Frames and the Tape Reader Casting. This linkage comprises:-*

| *Index Letter* | *Part No.* | *Part Name* |
|---|---|---|
| | 4151/244 | Dummy Keyboard CP *includes:-* |
| | 4151/158 | Combination Bed Sub Assembly *includes:-* |
| A | 4008/4D | Main Frame CP |
| B | 4008/106B | Trip Mechanism CP *(for breakdown see page 71)* |
| C | 4008/64A | Push Rod Stand CP |
| D | 4008/70 | Transfer Bellcrank CP *(for breakdown see page 71)* |
| E | 4008/61A | Comb Bar Support CP (RH) |
| F | 4008/221 | Comb Bar Support CP (LH) |
| G | 4008/207 | Shim *(2 per CP)* |
| H | 4008/84 | Clamp Plate *(2 per CP)* |
| J | 4008/88 | Clamp Plate *(2 per CP)* |
| | 4151/229 | Trip Bracket Assembly *includes:-* |
| K | 4151/167 | Trip Bracket |
| L | 4151/166 | Link Bracket |
| M | PG3302 | Torsion Spring |
| N | PP8101 | Pivot Pin |
| O | 4151/165 | Manual Trip Mounting Bracket |
| P | PG3303A | Torsion Spring |
| Q | PP6914 | Link Pivot Pin |
| R | CS1021 | Set Collar and Screw |
| S | 4151/172 | Cover Plate |
| T | 4151/45 | Keep Plate |
| | 4151/26 | Set of Combination Bars CP *includes:-* |
| U | 4151/16 | Run Out Bar CP |
| V | 4151/15 | Combination Bar CP |
| W | 4151/17 | Trip Bar CP |
| X | 4008/87A | Combination Bar Retainer |
| Y | PG7472 | Tension Spring *(6 per CP)* |
| Z | PG7077 | Tension Spring |
| AA | PW5729 | Shim *(2 per CP)* |
| AB | 4008/267 | Push Rod CP *(for breakdown see page 71)* |
| AC | 4008/83 | Clamp Plate *(2 per CP)* |
| AD | 4151/153 | RH Keyboard Side Plate CP |
| AE | 4151/155 | LH Keyboard Side Plate CP |
| AF | 4151/283 | Tie Rod |
| AG | 4008/192 | Clamp Plate *(2 per CP)* |
| AH | 4008/26 | Trip Slat CP |
| AJ | PS5927 | Cone Point Screw |
| | 4151/42 | Reset Mechanism CP *includes:-* |
| AK | 4151/43 | Reset Lever Bearing Bracket |
| AL | 4151/36 | Comb Bar Reset Lever CP |
| AM | PP5656 | Threaded Pin |
| AN | PG3307 | Torsion Spring |
| AO | PP6913 | Special Parallel Pin |
| AP | RL1183 | Roller *(2 per CP)* |
| AQ | RL1249 | Roller |
| AR | PP6912 | Special Parallel Pin |
| AS | 4151/44 | Roller Pivot Retainer |
| AT | EC5092 | Eccentric |
| AU | RL1185 | Roller |
| AV | PF1126 | Lubricating Washer |
| AW | PW5689 | Special Washer |
| AX | 4151/41 | Latch Lever CP |
| AY | 4151/150 | Disable Lever CP |
| AZ | PG7624 | Tension Spring |
| BA | 4008/268 | Locking Bar Stop Block |
| BB | 4008/378 | Shim |

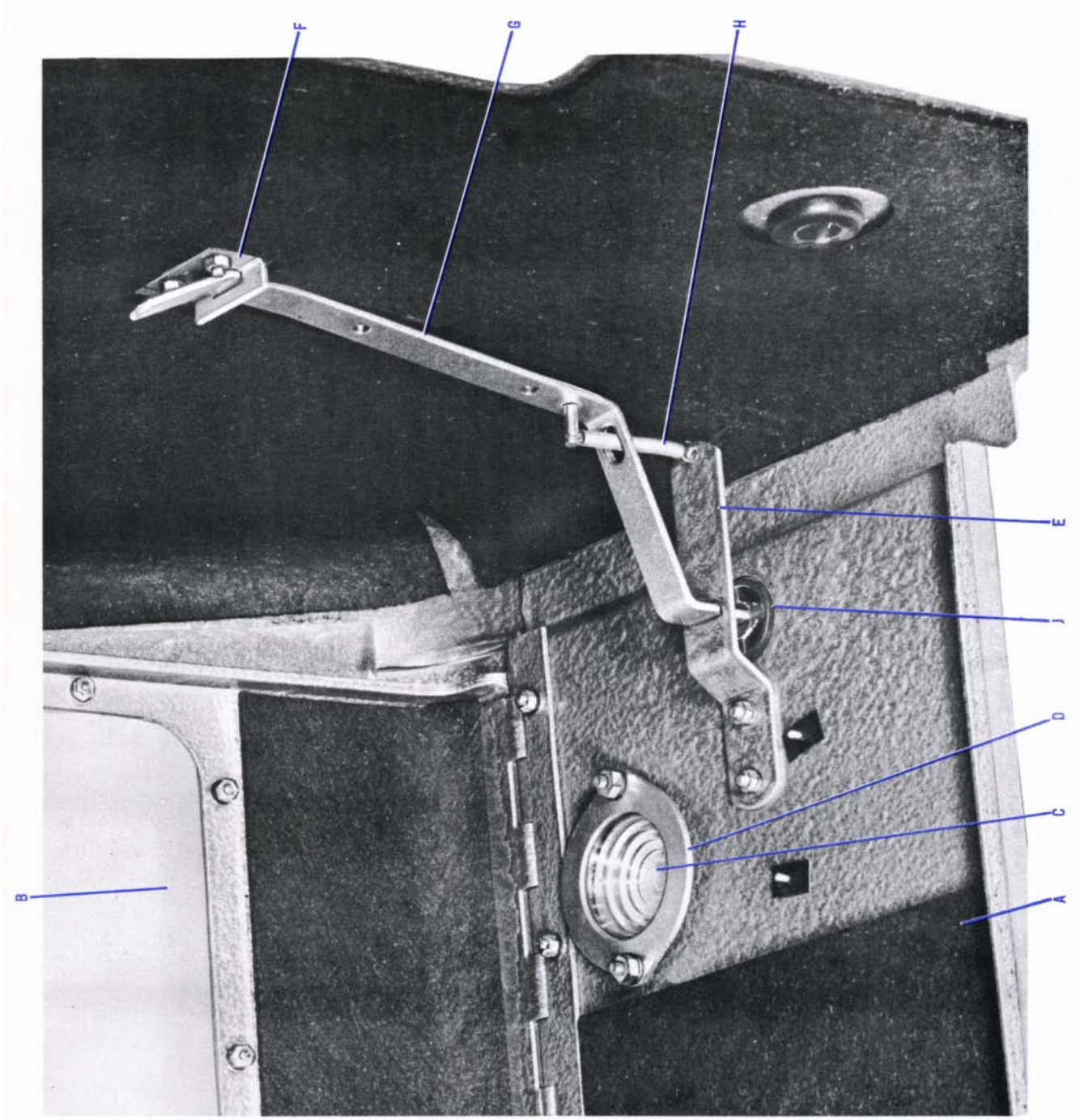


FIG. 7.46 COVER UNIT

**COVER UNIT S4015** *(for machines without Reperforating Attachment)*
**COVER UNIT S4098** *(for machines with a Reperforating Attachment)*
**COVER UNIT 4151/249** *(for machines fitted with a Tape Reader)*
**COVER UNIT 4151/210** *(for machines fitted with a Tape Reader and Reperforating Attachment)*

| *Index Letter* | *Part No.* | *Part Name* |
|---|---|---|
| A | 4015/21 | Cover Unit Sub CP *(for machines without Reperforating Attachment)* |
| | *or* 4098/1 | Cover Unit Sub CP *(for machines with a Reperforating Attachment)* |
| | *or* 4151/247 | Cover Unit Sub CP *(for machines fitted with a Tape Reader)* |
| | *or* 4151/21 | Cover Unit Sub CP *(for machines fitted with a Tape Reader and Reperforating Attachment)* |
| B | 4023/112 | Window |
| C | BO 3806/5 | Signal Lamp Lens |
| D | 4015/17 | Reflector Clamp Plate |
| E | 4015/43 | Carriage Return Bar Front Guide |
| F | 4015/39 | Carriage Return Bar Rear Bracket |
| G | 4015/33 | Carriage Return Bar CP |
| H | PG7513 | Tension Spring |
| J | KB1006 | Keybutton *(state inscription when ordering)* |

# LIST OF STANDARD PARTS USED ON MODEL 75

| Index Letter | Description | | | Quantity |
|---|---|---|---|---|
| **0BA SCREWS** | | | | |
| 0S1 | 7/8 in. Ch. Hd. | MS | PS 1066 | 2 |
| **1BA SCREWS** | | | | |
| 1S1 | 5/8 in. Ch. Hd. | MS | PS 1172 | 2 |
| **2BA SCREWS** | | | | |
| 2S1 | 3/16 in. Grub | MS | PS 1286 | 2 |
| 2S2 | 3/8 in. Csk. Hd. | MS | PS 1310 | 2 |
| 2S3 | 7/16 in. Ch. Hd. | MS | PS 1322 | 5 |
| 2S4 | 1/2 in. Ch. Hd. | MS | PS 1332 | 8 |
| 2S5 | 5/8 in. Hex. Hd. (Slt. Hd.) | MS | PS 1353 | 3 |
| 2S6 | 5/8 in. Ch. Hd. | MS | PS 1354 | 6 |
| 2S7 | 5/8 in. Hex. Hd. | MS | PS 1363 | 2 |
| 2S8 | 11/16 in. Csk. Hd. | MS | PS 1364 | 3 |
| 2S9 | 3/4 in. Ch. Hd. | MS | PS 1374 | 2 |
| 2S10 | 1.3/16 in. Ch. Hd. | MS | PS 1434 | 4 |
| 2S11 | 2 in. Ch. Hd. | MS | PS 1507 | 4 |
| **4BA SCREWS** | | | | |
| 4S1 | 1/8 in. Skt. Set | MS | PS 1647 | 6 |
| 4S2 | 3/16 in. Ch. Hd. | MS | PS 1659 | 7 |
| 4S3 | 1/4 in. Ch. Hd. | MS | PS 1676 | 22 |
| 4S4 | 1/4 in. Csk. Hd. | MS | PS 1678 | 4 |
| 4S5 | 5/16 in. Hex. Hd. (Slt. Hd.) | MS | PS 1649 | 2 |
| 4S6 | 5/16 in. Ch. Hd. | MS | PS 1687 | 50 |
| 4S7 | 5/16 in. Rd. Hd. | MS | PS 1691 | 3 |
| 4S8 | 3/8 in. Ch. Hd. | MS | PS 1694 | 33 |
| 4S9 | 3/8 in. Csk. Hd. | MS | PS 1696 | 5 |
| 4S10 | 3/8 in. Cap Hd. | MS | PS 1704 | 2 |
| 4S11 | 7/16 in. Ch. Hd. | MS | PS 1708 | 11 |
| 4S12 | 7/16 in. Csk. Hd. | MS | PS 1710 | 2 |
| 4S13 | 1/2 in. Ch. Hd. | MS | PS 1717 | 9 |
| 4S14 | 1/2 in. Hex. Hd. | MS | PS 1757 | 2 |
| 4S15 | 9/16 in. Rd. Hd. | MS | PS 1733 | 2 |
| 4S16 | 9/16 in. Hex. Hd. (Flat End) | MS | PS 1736 | 1 |
| 4S17 | 5/8 in. Ch. Hd. | MS | PS 1740 | 8 |
| 4S18 | 3/4 in. Hex. Hd. | MS | PS 1769 | 1 |
| 4S19 | 7/8 in. Ch. Hd. | MS | PS 1777 | 2 |
| 4S20 | 1.1/16 in. Ch. Hd. | MS | PS 1803 | 2 |
| 4S21 | 1.1/8 in. Ch. Hd. | MS | PS 1811 | 1 |
| 4S22 | 1.3/4 in. Ch. Hd. | MS | PS 1884 | 2 |
| **6BA SCREWS** | | | | |
| 6S1 | 1/8 in. Ch. Hd. | MS | PS 2029 | 4 |
| 6S2 | 1/8 in. Rd. Hd. | MS | PS 2033 | 1 |
| 6S3 | 5/32 in. Hex. Hd. (Scr 1/8") | MS | PS 2040 | 1 |
| 6S4 | 5/32 in. Ch. Hd. | MS | PS 2042 | 21 |
| 6S5 | 3/16 in. Hex. Hd. (Slt. Hd.) | MS | PS 2027 | 4 |
| 6S6 | 3/16 in. Ch. Hd. | MS | PS 2045 | 60 |
| 6S7 | 3/16 in. Csk. Hd. | MS | PS 2047 | 4 |
| 6S8 | 3/16 in. Rd. Hd. | MS | PS 2049 | 7 |
| 6S9 | 3/16 in. Cap Hd. | MS | PS 2056 | 1 |
| 6S10 | 7/32 in. Ch. Hd. | MS | PS 2057 | 27 |
| 6S11 | 7/32 in. Hex. Hd. (Slt. Hd.) | MS | PS 2140 | 9 |
| 6S12 | 1/4 in. Ch. Hd. | MS | PS 2061 | 180 |
| 6S13 | 1/4 in. Csk. Hd. | MS | PS 2063 | 37 |
| 6S14 | 1/4 in. Rd. Hd. | MS | PS 2065 | 14 |
| **6BA SCREWS (Continued)** | | | | |
| 6S15 | 1/4 in. Inst. Hd. | MS | PS 2069 | 3 |
| 6S16 | 1/6 in. Cap Hd. | MS | PS 2072 | 1 |
| 6S17 | 1/4 in. Hex. Hd. | MS | PS 2073 | 7 |
| 6S18 | 9/32 in. Ch. Hd. | MS | PS 2075 | 3 |
| 6S19 | 5/16 in. Hex. Hd. (Slt. Hd.) | MS | PS 2076 | 2 |
| 6S20 | 5/16 in. Ch. Hd. | MS | PS 2077 | 86 |
| 6S21 | 5/16 in. Ch. Hd. | Br | PS 2078 | 4 |
| 6S22 | 5/16 in. Csk. Hd. | MS | PS 2079 | 12 |
| 6S23 | 5/16 in. Rd. Hd. | MS | PS 2081 | 2 |
| 6S24 | 11/32 in. Ch. Hd. | MS | PS 2089 | 2 |
| 6S25 | 11/32 in. Csk. Hd. | MS | PS 2091 | 4 |
| 6S26 | 3/8 in. Ch. Hd. | MS | PS 2093 | 34 |
| 6S27 | 3/8 in. Cks. Hd. | MS | PS 2095 | 8 |
| 6S28 | 3/8 in. Rd. Hd. | MS | PS 2097 | 4 |
| 6S29 | 3/8 in. Inst. Hd. | Br | PS 2102 | 3 |
| 6S30 | 3/8 in. Cap Hd. | MS | PS 2104 | 2 |
| 6S31 | 3/8 in. Hex. Hd. | MS | PS 2105 | 1 |
| 6S32 | 7/16 in. Ch. Hd. | MS | PS 2109 | 16 |
| 6S33 | 7/16 in. Csk. Hd. | MS | PS 2111 | 3 |
| 6S34 | 15/32 in. Ch. Hd. | MS | PS 2122 | 1 |
| 6S35 | 1/2 in. Ch. Hd. | MS | PS 2125 | 29 |
| 6S36 | 1/2 in. Hex. Hd. | MS | PS 2137 | 4 |
| 6S37 | 9/16 in. Ch. Hd. | MS | PS 2141 | 15 |
| 6S38 | 9/16 in. Cks. Hd. | MS | PS 2143 | 14 |
| 6S39 | 5/8 in. Ch. Hd. | MS | PS 2157 | 12 |
| 6S40 | 5/8 in. Ch. Hd. | Br | PS 2158 | 4 |
| 6S41 | 5/8 in. Hex. Hd. | MS | PS 2168 | 1 |
| 6S42 | 11/16 in. Ch. Hd. | MS | PS 2173 | 3 |
| 6S43 | 3/4 in. Ch. Hd. | MS | PS 2189 | 9 |
| 6S44 | 3/4 in. Csk. Hd. | MS | PS 2191 | 1 |
| 6S45 | 13/16 in. Ch. Hd. | MS | PS 2205 | 3 |
| 6S46 | 15/16 in. Ch. Hd. | MS | PS 2237 | 2 |
| 6S47 | 1 in. Ch. Hd. | MS | PS 2253 | 1 |
| 6S48 | 1.1/16 in. Ch. Hd. | MS | PS 2264 | 2 |
| **8BA SCREWS** | | | | |
| 8S1 | 3/32 in. Ch. Hd. | MS | PS 2413 | 1 |
| 8S2 | 1/8 in. Ch. Hd. | MS | PS 2430 | 17 |
| 8S3 | 1/8 in. Csk. Hd. | MS | PS 2432 | 11 |
| 8S4 | 1/8 in. Rd. Hd. | MS | PS 2434 | 1 |
| 8S5 | 5/32 in. Cap Hd. | MS | PS 2424 | 1 |
| 8S6 | 5/32 in. Hex. Hd. | MS | PS 2425 | 12 |
| 8S7 | 5/32 in. Rd. Hd. | MS | PS 2441 | 3 |
| 8S8 | 5/32 in. Ch. Hd. | MS | PS 2443 | 40 |
| 8S9 | 3/16 in. Ch. Hd. | MS | PS 2445 | 56 |
| 8S10 | 3/16 in. Csk. Hd. | MS | PS 2447 | 11 |
| 8S11 | 3/16 in. Rd. Hd. | MS | PS 2449 | 5 |
| 8S12 | 3/16 in. Hex. Hd. | MS | PS 2426 | 1 |
| 8S13 | 7/32 in. Hex. Hd. | MS | PS 2427 | 8 |
| 8S14 | 7/32 in. Ch. Hd. | MS | PS 2457 | 12 |
| 8S15 | 7/32 in. Csk. Hd. | MS | PS 2458 | 13 |
| 8S16 | 1/4 in. Ch. Hd. | MS | PS 2462 | 31 |
| 8S17 | 1/4 in. Csk. Hd. | MS | PS 2464 | 19 |
| 8S18 | 1/4 in. Inst. Hd. | MS | PS 2470 | 9 |
| 8S19 | 1/4 in. Hex. Hd. | MS | PS 2493 | 4 |
| 8S20 | 5/16 in. Ch. Hd. | MS | PS 2477 | 7 |
| 8S21 | 5/16 in. Hex. Hd. | MS | PS 2488 | 2 |
| 8S22 | 3/8 in. Ch. Hd. | MS | PS 2494 | 12 |
| 8S23 | 7/16 in. Ch. Hd. | MS | PS 2509 | 2 |
| 8S24 | 1/2 in. Ch. Hd. | MS | PS 2526 | 1 |
| 8S25 | 9/16 in. Ch. Hd. | MS | PS 2541 | 5 |
| 8S26 | 3/4 in. Ch. Hd. | MS | PS 2590 | 2 |
| 8S27 | 13/16 in. Ch. Hd. | MS | PS 2605 | 1 |

| Index Letter | Description | | | Quantity |
|---|---|---|---|---|
| **FULL NUTS** | | | | |
| 0N1 | 0BA Full Nut | MS | PN 1001 | 1 |
| 2N2 | 2BA Full Nut | MS | PN 1005 | 2 |
| 4N3 | 4BA Full Nut | MS | PN 1009 | 39 |
| 6N4 | 6BA Full Nut | MS | PN 1013 | 111 |
| 8N5 | 8BA Full Nut | MS | PN 1017 | 75 |
| **LOCKNUTS** | | | | |
| 2LN1 | 2BA Locknut | MS | PN 1505 | 6 |
| 2LN2 | 2BA Locknut | Br | PN 1506 | 1 |
| 4LN3 | 4BA Locknut | MS | PN 1509 | 25 |
| 6LN4 | 6BA Locknut | MS | PN 1513 | 33 |
| 8LN5 | 8BA Locknut | MS | PN 1517 | 41 |
| **PLAIN WASHERS SQUARE EDGE (STAMPED)** | | | | |
| 0PW1 | 0BA Plain Washer | MS | PW 1001 | 1 |
| 2PW2 | 2BA Plain Washer | MS | PW 1005 | 28 |
| 4PW3 | 4BA Plain Washer | MS | PW 1009 | 77 |
| 6PW4 | 6BA Plain Washer | MS | PW 1013 | 232 |
| 8PW5 | 8BA Plain Washer | MS | PW 1017 | 148 |
| **PLAIN WASHER SQUARE EDGE (TURNED)** | | | | |
| 2PW6 | 2BA Plain Washer | MS | PW 1029 | 2 |
| 6PW7 | 6BA Plain Washer | MS | PW 1037 | 1 |
| 8PW8 | 8BA Plain Washer | MS | PW 1041 | 11 |
| **SPRING WASHERS** | | | | |
| 0SW1 | 0BA Single Coil Spring Washer | Steel | PW 2001 | 1 |
| 0SW2 | 0BA Single Coil Spring Washer | Steel | PW 2002 | 2 |
| 2SW3 | 2BA Single Coil Spring Washer | Steel | PW 2013 | 38 |
| 4SW4 | 4BA Single Coil (Heavy) Spring Washer | Steel | PW 2025 | 26 |
| 4SW5 | 4BA Single Coil (Light) Spring Washer | Steel | PW 2026 | 122 |
| 4SW6 | 4BA Double Coil Spring Washer | Steel | PW 2027 | 1 |
| 6SW7 | 6BA Single Coil (Light) Spring Washer | Steel | PW 2037 | 512 |
| 6SW8 | 6BA Single Coil (Heavy) Spring Washer | Steel | PW 2038 | 4 |
| 6SW9 | 6BA Single Coil (Medium) Spring Washer | Steel | PW 2039 | 6 |
| 8SW10 | 8BA Single Coil (Heavy) Spring Washer | Steel | PW 2049 | 2 |
| 8SW11 | 8BA Single Coil (Light) Spring Washer | Steel | PW 2050 | 264 |
| **LOCK WASHERS (INTERNAL TEETH)** | | | | |
| 2LW1 | 2BA Lock Washer | Steel | PW 4145 | 5 |
| 4LW2 | 4BA Lock Washer | Steel | PW 4141 | 6 |
| 6LW3 | 6BA Lock Washer | Steel | PW 4139 | 18 |
| **CIRCLIPS** | | | | |
| C1 | Circlip | | BO 3232 | 18 |
| C2 | Circlip | | BO 3225 | 63 |
| C3 | Circlip | | BO 3229 | 49 |
| C4 | Circlip | | BO 3230 | 18 |
| C5 | Circlip | | BO 3228 | 14 |
| C6 | Circlip | | BO 3226 | 2 |
| **SPRING DOWEL PINS** | | | | |
| SDP1 | Spring Dowel Pin | | BO 3694/1 | 15 |
| SDP2 | Spring Dowel Pin | | BO 3694/2 | 1 |

# NUMERICAL INDEX

Parts indexed thus *11* AG* are listed on these pages but not illustrated on the facing page.

| Part No. | Part Name | Page | Index Letters |
|---|---|---|---|
| 1835/28 | Switch Clamping Plate | 77 | R |
| 1835/29 | Alarm Buffer Spring | 77 | L |
| 1835/31 | Contact CP | 77 | N |
| 1855/325 | Special Stop Screw CP | 67<br>69 | AK<br>CK |
| 1910/17A | Governor Spring Plate | 59 | D |
| 1947/79 | Adjusting Arm CP | 83 | CJ |
| 1947/239B | Bearing Block (RH & LH) | 83 | AW |
| 1947/263A | Feed Spindle CP | 83 | AX |
| 1947/268 | Feed Ratchet | 83 | AY |
| 1947/274 | Bottom Guide Plate (Advance Feed) | 83 | AT |
| 1947/275 | Bottom Guide Plate (Centre Feed) | 83 | AT |
| 1947/317A | Tape Guide Frame CP | 83 | BF |
| 1947/318 | Tape Guide Frame Latch CP | 83 | BM |
| 1947/319A | Stripper Spring | 83 | BQ |
| 1947/321A | Latch Support | 83 | BL |
| 1947/323A | Tape Guide | 83 | BK |
| 2003/277 | Shim | 9<br>11 | –<br>– |
| 2263/6 | Inductor Coil | 79 | D |
| 2942/14 | Resistor Board Sub. CP | 57 | AB |
| S3742 | Signals R.I.S. Box CP | 79 | – |
| 3742/3 | Signals R.I.S. Cover CP | 79 | O |
| 3742/6 | Signals R.I.S. Screen CP | 79 | B |
| 3742/9 | Signals R.I.S. Base CP | 79 | A |
| 3742/10 | Insulator | 79 | J |
| 3742/12 | Bracket CP | 79 | H |
| 3742/13 | Insulator | 79 | G |
| 3751/3 | Roller | 85 | W |
| 3886/142 | Tape Roller | 83<br>85 | DC<br>C |
| 3905/10 | Special Nut | 57 | O |
| 4000/1 | Cover Plate CP | 7<br>9<br>11 | –<br>–<br>– |
| 4000/4A | Starter Trip Lever CP | 43 | AU |
| 4000/6 | Trip Shaft CP | 43 | AT |
| 4000/9 | Spring Adjustment Link | *9**<br>11 | *AC*<br>AC |
| 4000/14 | Answer Back Feed Pawl CP | 7 | J |
| 4000/15A | Comb Bar Reset Lever CP | 9<br>*11** | AG<br>*AG* |
| 4000/16 | Reset Lever Sub CP | 9<br>*11** | AH<br>*AH* |
| 4000/18 | Answer Back Ratchet Feed Pawl | 7 | – |
| 4000/19 | Answer Back Feed Pawl Stop | 7 | – |
| 4000/20 | Transfer Lever Bracket CP | 75 | BF |
| 4000/24 | Reset Lever Bearing | 9<br>*11** | AJ<br>*AJ* |
| 4000/25A | Reset Lever Bearing Plate | 9<br>*11** | AK<br>*AK* |
| 4000/26 | Roller Pivot Keeper | 9<br>*11** | AN<br>*AN* |
| 4000/32 | Keyboard Mask CP (3 Row) | 7 | E |
| 4000/35 | Selector Frames Front Bearing | 7<br>73 | C<br>S |
| 4000/39 | Selector Frames Rack | 9<br>*11**<br>73 | AR<br>*AR*<br>T |
| 4000/45 | Keyboard Mask CP (4 Row Treble Space Pad) | 7 | E |
| 4000/48 | Keyboard Mask CP | 7 | E |
| 4000/50A | Guide Rail CP | 7 | – |
| 4000/55 | Lamp Guard | 9<br>*11** | F<br>*F* |
| 4000/168 | Transfer Lever Sub CP | 75 | BG |
| 4000/169 | Transfer Lever Link | 75 | BH |
| 4000/175 | Transfer Lever CP | 75 | – |
| 4000/239 | Tension Spring CP | 15 | – |
| S4001C | Ribbon Unit | 9<br>*11**<br>55 | O<br>*O*<br>– |
| 4001/3A | Double Shouldered Bush | 55 | G |
| 4001/5 | Upper Ribbon Unit Trackrail | 55 | F |
| 4001/6 | Lower Ribbon Unit Trackrail | 55 | H |
| 4001/8 | Trackrail Bracket (LH) | 55 | A |
| 4001/11 | Ribbon Unit Ratchet | 55 | W |
| 4001/24 | Feed Lever Pivot | 55 | X |
| 4001/25A | Ribbon Unit Pawl | 55 | AA&AF |
| 4001/30 | Bias Spring Support | 55 | AM |
| 4001/31 | Spring Cup | 55 | AO |
| 4001/34B | Carriage Return Tape Roller Bracket CP | 55 | B |
| 4001/36 | Trackrail Bracket (RH) CP | 55 | E |
| 4001/38B | Jumper Sub CP | 55 | AP |
| 4001/41 | Ribbon Feed Lever Sub CP | 55 | Y |
| 4001/42 | Ribbon Feed Lever CP | 55 | – |
| 4001/43 | Ribbon Change Lever CP | 55 | AJ |
| 4001/45 | Feed Change Lever CP | 55 | AK |
| 4001/46A | Top Plate CP | 55 | AH |
| 4001/47 | Ratchet Coupling CP | 55 | V |
| 4001/49 | Retention Pawl Spring | 55 | AD |
| 4001/57 | Ribbon Lift Lever CP | 55 | BN |
| 4001/59 | Lift Link Stop | 55 | BJ |
| 4001/60 | Lift Link Upper Stop | 55 | BK |
| 4001/61 | Lift Link CP | 55 | BG |
| 4001/66A | Ribbon Jumper Sub CP | 55 | BE |
| 4001/68 | Roller Arm CP | 55 | BP |
| 4001/70A | Bracket & Roller CP | 55 | – |
| 4001/74 | Ribbon Unit Shaft | 55 | O |
| 4001/76 | Spool Drive Plate CP | 55 | Q |
| 4001/79A | Spool Retainer CP | 55 | BB |
| 4001/82 | Retaining Clip | 55 | K |
| 4001/87 | Side Plate (LH) CP | 55 | M |
| 4001/88A | Side Plate (RH) CP | 55 | L |
| 4001/89 | Lower Bearing CP | 55 | N |
| 4001/94 | LH Side Plate CP | 55 | BM |
| 4001/95 | Special Nut | 55 | BD |
| 4001/96 | Tie Bar | 55 | AX |
| 4001/97 | Ribbon Roller Pivot | 55 | AW |
| 4001/98 | Bush | 55 | BC |
| 4001/100 | Pillar | 55 | AR |
| 4001/101 | Keep Plate | 55 | AT |
| 4001/102 | Ribbon Retainer | 55 | AS |
| 4001/103 | Ribbon Guide Base Plate | 55 | AQ |
| 4001/104 | Ribbon Guide | 55 | AU |
| 4001/107 | Plate | 55 | BU |
| 4001/108 | Keep Plate | 55 | AV |
| S4002 | Type Head Carriage Unit | 9<br>*11**<br>51 | H<br>*H*<br>– |
| 4002/1 | Typehead Boss | 51 | – |
| 4002/2 | Typehead Sleeve | 51 | AG |
| 4002/3 | Type Pad | 51 | – |
| 4002/4 | Typehead Boss and Sleeve | 51 | – |
| 4002/7A | Typehead Carriage Casting CP | 51 | AF |
| 4002/9 | Corrector Wheel CP | 51 | AO |
| 4002/10 | Typehead Spindle | 51 | AH |
| 4002/11 | Typehead Carriage and Casting CP | 51 | – |
| 4002/12 | Type Head Carriage CP | 51 | – |
| 4002/15 | Pawl Support Plate CP | 51 | BX |
| 4002/17 | Pawl Patch Bracket CP | 51 | CC |
| 4002/19 | Pawl Latch CP | 51 | CE |
| 4002/22 | Jumper Arm | 51 | CL |
| 4002/25A | Lifting Link CP | 51 | BL |
| 4002/27 | Corrector Lever CP | 51 | AZ |
| 4002/29 | Carriage Return Lever CP | 51 | CJ |
| 4002/30 | Guide Rail Oiler Retainer | 51 | J |
| 4002/31 | Splined Shaft Oiler Retainer | 51 | AE |
| 4002/32 | Gear Retainer | 51 | AU |
| 4002/33A | Corrector Bellcrank | 51 | AX |
| 4002/34 | Bellcrank Stop | 51 | BG |
| 4002/35 | Backing Plate | 51 | BH |
| 4002/36A | Lifting Block | 51 | BO |
| 4002/37A | Spring Anchor | 51 | BU |
| 4002/39 | Carriage Dashpot Extension | 51 | AW |
| 4002/40 | Carriage Return Lever Retainer | 51 | CG |
| 4002/41 | Retainer Spacer | 51 | CH |
| 4002/42 | Typehead Carriage Pawl | 51 | CA |

| Part No. | Part Name | Page | Index Letters |
|---|---|---|---|
| 4002/43 | Buffer Plate | 51 | BW |
| 4002/44 | Line Length Operating Lever | 51 | BY |
| 4002/46A | Bearing Plate CP | 51 | D |
| 4002/48 | Carriage Return Link Arm CP | 51 | U |
| 4002/50B | Carriage Return Manual Lever CP | 51 | T |
| 4002/53 | End Plate CP | 51 | E |
| 4002/55 | End Casting CP | 51 | A |
| 4002/59 | Retention Rack CP | 51 | K |
| 4002/62A | Feed Rack CP | 51 | M |
| 4002/63 | Typehead Splined Shaft | 51 | V |
| 4002/64 | Carriage Return Splined Shaft | 51 | S |
| 4002/65 | Print Rail | 51 | R |
| 4002/66A | Guide Rail | 51 | F |
| 4002/67 | Carriage Link | 9 | J |
| | | *11** | *J* |
| | | 51 | CQ |
| 4002/68 | Link End Piece | 9 | K |
| | | *11** | *K* |
| | | 51 | CR |
| 4002/69 | Rack Retainer | 51 | N |
| 4002/70 | Line Length Operating Stop | 51 | Q |
| 4002/71 | Shim | 51 | BJ |
| 4002/72 | Carriage Extension CP | 51 | - |
| 4002/73 | Carriage Extension | 51 | CW |
| 4002/76A | Tape Retainer CP | 51 | CK |
| 4002/77 | Typehead Boss CP | 51 | AL |
| 4002/78 | Lifting Block Nut | 51 | BP |
| 4002/133 | Retention Rack CP | 51 | K |
| 4002/134 | Bracket | 51 | DB |
| 4002/136 | End Plate CP | 51 | E |
| 4002/138 | End Casting CP | 51 | A |
| 4003/5A | Anchor Plate | 15 | F |
| 4003/10 | Typehead Rotation Rack | 17 | Y |
| | | 21 | Y |
| 4003/11 | Typehead Lift Rack | 17 | X |
| | | 21 | X |
| 4003/13 | Rack Support Block | 17 | R |
| | | 21 | R |
| 4003/16 | Upper Guide Strip | 17 | H |
| | | 21 | H |
| 4003/17 | Lower Guide Strip | 17 | J |
| | | 21 | J |
| 4003/25 | Main Lever Pivot | 15 | A |
| 4003/26 | Lift Lever Pivot | 15 | Y |
| | | 17 | O |
| | | 21 | O |
| 4003/27 | Bellcrank Pivot | 15 | S |
| | | 17 | C |
| | | 21 | C |
| 4003/28 | Anchor Plate | 15 | J |
| | | 17 | N |
| | | 21 | N |
| 4003/30A | Trunnion Block | 15 | W |
| | | 17 | - |
| | | 21 | - |
| 4003/33A | Push Rod CP No.3 | 15 | C |
| 4003/39A | Lift Link CP | 15 | AA |
| 4003/46A | Main Lever Assembly | 15 | L |
| 4003/48 | Lower Lever CP | 15 | B |
| 4003/49A | Lower Lever and Push Rod CP | 15 | - |
| 4003/50 | Aggregate Lever Sub CP | 15 | E |
| 4003/51A | Aggregate Lever CP | 15 | - |
| 4003/52A | Lift Lever CP | 15 | X |
| | | 17 | P |
| | | 21 | P |
| 4003/53A | Lift Bellcrank CP | 15 | V |
| | | 17 | E |
| | | 21 | E |
| 4003/54A | Rotation Bellcrank CP | 15 | U |
| | | 17 | D |
| | | 21 | D |
| 4003/56 | Long Front Link CP | 15 | K |
| 4003/57 | Long Link CP | 15 | D&AC |
| | | 17 | L |
| | | 21 | L |
| 4003/58 | Narrow Rack Guide CP | 17 | U |
| | | 21 | U |
| 4003/59 | Wide Rack Guide CP | 17 | T |
| | | 21 | T |
| 4003/62 | Lubricating Wick | 15 | M |
| 4003/63A | Aggregate Levers Assembly | 9 | B |
| | | *11** | *B* |
| | | 15 | - |
| 4003/66 | Top Clamp Plate | 17 | W |
| | | 21 | W |
| 4003/67A | Stop Block | 17 | V |
| | | 21 | V |
| 4004/4 | Platen Sub CP | 63 | E |
| 4004/11 | Platen Feed Ratchet | 63 | Q |
| 4004/17 | Stop Bracket | 63 | CM |
| 4004/19 | Platen Retention Wheel | 63 | M |
| 4004/25A | Tie Rod | 63 | C |
| 4004/26 | Platen Spindle | 63 | P |
| 4004/30A | Cam | 63 | AM |
| 4004/32 | Pressure Frame Support Bracket | 63 | AC |
| 4004/36 | Paper Tension Rod | 63 | CD |
| 4004/37 | Tension Rod End Cheek | 63 | CE |
| 4004/38 | Paper Tension Shaft Lever | 63 | CF |
| 4004/44 | Platen Knob Coupling | 63 | W |
| 4004/46 | Print Spring Change Lever | 63 | CL |
| 4004/48 | Feed Lever Stop Plate | 63 | BK |
| 4004/50 | Platen Knob Retaining Screw | 63 | Y |
| 4004/53A | Pressure Roller Release Lever CP | 63 | AS |
| 4004/55 | Paper Tube Tension Lever CP | 63 | BZ |
| 4004/58 | Retention Roller Bracket CP | 63 | AU |
| 4004/59 | Platen Spindle CP | 63 | - |
| 4004/60 | Platen Final CP | 63 | - |
| 4004/65A | Feed Change Lever CP | 63 | BD |
| 4004/69 | Paper Tube CP | 63 | CC |
| 4004/71 | Feed Lever and Pawl CP | 63 | BJ |
| 4004/77 | Platen Knob CP | 63 | X |
| 4004/79 | Single Line Feed Stop | 63 | BE |
| 4004/81A | Paper Guide Sub CP | 63 | BN |
| 4004/82 | Tension Bar | 63 | CK |
| 4004/91 | Platen Retention Panel | 63 | AX |
| 4004/93 | Paper Retention and Throwout Lever CP | 63 | BX |
| 4004/95 | Paper Damper | 63 | BO |
| 4004/96 | Paper Guide and Damper Assembly Unit | 63 | - |
| 4004/108 | Tie Bar | 63 | D |
| 4004/109 | Control Mechanism Back Plate CP | 65 | CN |
| 4004/111 | Backplate Extension CP | 65 | CO |
| 4004/113 | Slat Operating Lever CP | 65 | CP |
| 4004/115 | Slat Latch | 65 | CS |
| 4004/116 | Control Mechanism Sub Plate CP | 65 | CQ |
| 4004/118 | Slat Latch Retainer | 65 | CT |
| 4004/119 | Ribbon Jumper Slat | 65 | DA |
| 4004/120 | Bearing Plate CP | 65 | DB |
| 4005/4 | Spring Anchor | 53 | R |
| S4006 | Selector Frames Unit | 7 | B |
| | | 73 | - |
| 4006/10 | Selector Frames Rear Bearing | 73 | A |
| 4006/11 | Selector Frames Pivot Shaft | 73 | B |
| 4006/13 | Trip Frame CP | 73 | D |
| 4006/14 | Selector Frame No.1 CP | 73 | F |
| 4006/15 | Selector Frame No.2 CP | 73 | G |
| 4006/16 | Selector Frame No.3 CP | 73 | H |
| 4006/17 | Selector Frame No.4 | 73 | J |
| 4006/18 | Selector Frame No.5 CP | 73 | K |
| 4006/19 | Selector Bar | 73 | O |
| 4006/20 | Trip Bar CP | 73 | N |
| 4007/4A | Field Core Grinding CP | 29 | C |
| 4007/12 | Armature CP | 29 | G |
| 4007/13B | Base Plate | 29 | A |
| 4007/14 | Armature Stop Bracket | 29 | R |
| 4007/16A | Magnet | 29 | E |
| 4007/18 | Bearing Housing | 29 | H |
| 4007/21A | Cover CP | 29 | U |
| 4007/24A | Coil Retaining Plate | 29 | L |
| 4007/25 | Retaining Spring | 29 | J |
| 4007/33 | Anchor Bar | 29 | S |
| 4007/35 | Armature Stop Bracket CP | 29 | - |
| 4007/37 | Centre Support CP | 29 | B |
| 4007/42 | Field Unit CP | 29 | - |
| S4008A | Keyboard Unit | 7 | D |
| | | 67 | - |
| | | 69 | - |
| | | 71 | - |
| 4008/1B | Keyboard Sub-Assembly | 67 | - |
| 4008/4D | Keyboard Main Frame | 71 | CU |
| | | 93 | A |
| 4008/8B | Keyboard Side Plate | 67 | C |
| 4008/12B | Keyboard Side Plate | 67 | B |
| 4008/13A | Keyboard Front Plate | 67 | E |
| 4008/17A | Rear Keybar Rack | 67 | A |
| 4008/20A | Stop Strip CP | 67 | P |
| 4008/26 | Trip Slat CP | 67 | F |
| | | 93 | AH |
| 4008/27 | Ball Cage Front Plate | 67 | K |

| Part No. | Part Name | Page | Index Letters |
|---|---|---|---|
| 4008/29 | Ball Cage Back Plate | 67 | L |
| 4008/31 | Ball Stop | 67 | N |
| 4008/53A | Locking Bar CP | 71 | FE |
| 4008/55 | Trip Bar | 71 | FD |
| 4008/57 | Combination Bar CP | 71 | FC |
| 4008/58 | Set of Combination Bars CP | 71 | – |
| 4008/61A | Comb Bar Support | 71 | CW |
| | | 93 | E |
| 4008/64A | Push Rod Stand CP | 71 | EC |
| | | 93 | C |
| 4008/65A | Transfer Bellcrank Carrier | 71 | DW |
| 4008/66 | Bellcrank Rack | 71 | DX |
| 4008/67 | Code Transfer Bellcrank | 71 | DY |
| 4008/68 | Bellcrank Separator | 71 | DZ |
| 4008/70 | Transfer Bellcrank CP | 71 | – |
| | | 93 | D |
| 4008/78A | 'Here Is' Treadle CP | 67 | BQ |
| 4008/80A | WRU Treadle CP | 67 | BT |
| 4008/81 | Outer Treadle Bearing | 67 | BW |
| 4008/82A | Locking Bar Support | 71 | EM |
| 4008/83 | Clamp Plate | 71 | FU |
| | | 93 | AC |
| 4008/84 | Clamp Plate | 71 | CY |
| | | 93 | H |
| 4008/87A | Comb Bar Retainer | 71 | FN |
| | | 93 | X |
| 4008/88 | Clamp Plate | 71 | ED |
| | | 93 | J |
| 4008/90A | Keybar Dart No. 1 | 67 | AA |
| 4008/91A | Keybar Dart No. 2 | 67 | AB |
| 4008/92A | Keybar Dart No. 3 | 67 | AC |
| 4008/94 | Keybar Pivot | 67 | D |
| 4008/97B | Trip Lever CP | 71 | DP |
| 4008/99 | Trip Lever Pawl | 71 | DT |
| 4008/101 | Latch Control Lever | 71 | DJ |
| 4008/103A | Comb Bar Lever Latch | 71 | DH |
| 4008/104 | Comb Bar Lever | 71 | DE |
| 4008/105 | Comb Bar Lever Pin | 71 | DF |
| 4008/106B | Trip Mechanism CP | 71 | – |
| | | 93 | B |
| 4008/107 | Space Pad CP | 67 | AS |
| 4008/110 | Run Out Bar CP | 71 | FB |
| 4008/113 | Shift Lock Bar CP | 71 | FA |
| 4008/114A | Shift Lock Upper Bearing (LH) | 71 | FQ |
| 4008/116 | Bias Spring Block | 71 | FO |
| 4008/120B | Space Keybar CP | 69 | CL |
| 4008/122 | Ball Cage Channel | 67 | J |
| 4008/123 | Ball Cage Sub CP | 67 | – |
| 4008/124 | Ball Cage CP | 67 | – |
| 4008/130 | Figure Shift Frame CP | 69 | CC |
| 4008/131 | Letter Shift Frame CP | 69 | CE |
| 4008/134 | Adjustment Block | 67 | AL |
| | | 69 | CB |
| 4008/135 | Space Key Lever | 69 | CA |
| 4008/136B | Space Frame Support Bar | 69 | BX |
| 4008/137 | Shift Frame Support | 69 | BY |
| 4008/138A | Shift Frame Stop | 69 | CH |
| 4008/139 | Shift Pad Stop | 69 | CJ |
| 4008/140B | Space Frame Spindle | 69 | BZ |
| 4008/141 | Treble Space Bar CP | 69 | – |
| 4008/145 | Long Single Space Bar | 69 | – |
| 4008/146 | Space and Shift Pad (Plain) | 69 | CN |
| 4008/147 | Long Space Pad | 69 | CT |
| 4008/151 | Space and Shift Pad. Moulded Character | 69 | CN |
| 4008/161B | Space Frame Support Bar | 67 | AD |
| 4008/162 | Shiftlock Bar Centre Bearing | 71 | EF |
| 4008/169 | Space Pad Frame CP | 69 | CD |
| 4008/170 | Long Space Pad Frame CP | 69 | CR |
| 4008/171A | Keybar and Button CP | 67 | R |
| 4008/172A | Keybar and Button CP | 67 | S |
| 4008/173A | Keybar and Button CP | 67 | T |
| 4008/174A | Shift Keybar and Button CP | 67 | V |
| 4008/175A | Keybar and Button CP | 67 | U |
| 4008/176A | Shift Keybar and Button CP | 67 | V |
| 4008/177A | Shift Keybar and Button CP | 67 | V |
| 4008/178A | 'Who Are You' Keybar and Button CP | 67 | W |
| 4008/179A | 'Who Are You' Keybar and Button CP | 67 | W |
| 4008/180A | 'Who Are You' Keybar and Button CP | 67 | W |
| 4008/181A | 'Here Is' Keybar and Button CP | 67 | X |
| 4008/182A | 'Here Is' Keybar and Button CP | 67 | X |
| 4008/183A | 'Here Is' Keybar and Button CP | 67 | X |
| 4008/184A | 'Run Out' Keybar and Button CP | 67 | Y |
| 4008/185A | 'Run Out' Keybar and Button CP | 67 | Y |
| 4008/186A | 'Run Out' Keybar and Button CP | 67 | Y |
| 4008/187A | Shift Keybar and Button CP | 67 | V |
| 4008/188A | 'Who Are You' Keybar and Button CP | 67 | W |
| 4008/192 | Clamp Plate | 67 | Q |
| | | 93 | AG |
| 4008/194 | Dowel Clip CP | 71 | EJ |
| 4008/195 | Clamp Plate | 71 | EK |
| 4008/196A | Shiftlock Bearing CP | 71 | EE |
| 4008/203 | Shiftlock Bearing Plate (RH) | 71 | EG |
| 4008/204 | Trip Slat Stop Bracket | 67 | H |
| 4008/207 | Shim | 71 | CX |
| | | 93 | G |
| 4008/210 | Space Pad Frame CP | 67 | AG |
| 4008/212 | 3rd Row Space Bar | 67 | – |
| 4008/213 | Shift Frame Support | 67 | AE |
| 4008/215 | Shift Pad Stop CP | 67 | AJ |
| 4008/216 | Space Key Lever | 67 | AM |
| 4008/217 | Shift Frame Stop | 67 | AH |
| 4008/218 | Space Frame Spindle | 67 | AF |
| 4008/219A | Space Keybar CP | 67 | AT |
| 4008/221 | Comb Bar Support | 71 | CV |
| | | 93 | F |
| 4008/225A | Space Dummy Key Bar CP | 69 | CM |
| 4008/235 | Latch Control Stop | 71 | DO |
| 4008/237 | Bracket CP | 71 | DA |
| 4008/239 | Nut Plate CP | 71 | DC |
| 4008/240 | Trip Mechanism Bracket | 71 | DB |
| 4008/241 | Trip Mechanism Base Plate | 71 | CZ |
| 4008/242 | Spacer | 71 | DD |
| 4008/244 | Push Rod | 71 | FT |
| 4008/245 | Push Rod Retainer | 71 | FR |
| 4008/246 | Push Rod Top Rack | 71 | FS |
| 4008/267 | Push Rod CP | 71 | – |
| | | 93 | AB |
| 4008/268 | Locking Bar Support | 71 | EL |
| | | 93 | BA |
| 4008/378 | Shim | 71 | EO |
| | | 93 | BB |
| 4008/379 | Shim | 71 | EN |
| 4008/382 | Shim | 67 | BJ |
| 4008/385 | Long Space Pad Frame | 69 | CR |
| 4008/389 | Long Single Space Bar CP | 69 | – |
| 4008/397 | WRU Disable Lever CP | 67 | – |
| 4008/398 | WRU Disable Lever | 67 | BN |
| 4008/399 | Striker Plate | 67 | BO |
| 4009/7A | Detent | 45 | BH |
| 4009/9A | Worm Wheel Boss | 43 | AK |
| 4009/16 | Trip Operating Lever Stop | 43 | AG |
| 4009/20 | Spring Washer | 45 | BN |
| 4009/24 | Starter Holdout Lever | 47 | DS |
| 4009/26C | Drive Shaft | 43 | J |
| | | 49 | – |
| 4009/29 | Friction Washer | 43 | AM |
| 4009/30 | Drive Shaft Bearing Block | 43 | G |
| 4009/31 | Starter Lever | 47 | DJ |
| 4009/33 | Starter Lever Stop Bracket | 47 | DB |
| 4009/34 | Guide Bracket | 47 | DC |
| 4009/45 | Adjustment Screw Bracket | 47 | DY |
| 4009/52 | Shoe | 45 | BM |
| 4009/53 | Special Shouldered Bush | 43 | B |
| 4009/58 | Guide Bracket | 47 | DV |
| 4009/59 | Worm Spindle Bearing | 47 | DE |
| 4009/62 | Starter Operating Link | 47 | DK |
| 4009/65 | Retention Driving Plate | 43 | Y |
| 4009/66 | Holdout Release Bracket | 47 | DO |
| 4009/67A | Camshaft Thrust Plate | 45 | CL |
| 4009/85 | Clamp | 47 | DZ |
| 4009/92 | Worm Spindle | 47 | DF |
| 4009/93A | Driven Gear CP | 49 | – |
| 4009/94A | Driven Gear | 49 | – |
| 4009/95A | Driven Gear | 49 | – |
| 4009/98 | Final Worm Wheel | 43 | AL |
| 4009/101A | Selector Unit Casting CP | 43 | A |
| 4009/103 | Drive Shaft Bearing Block CP | 43 | – |
| 4009/104 | Drive Shaft Bearing CP | 43 | – |
| 4009/105C | Drive Shaft CP | 43 | – |
| 4009/121A | Worm Wheel CP | 43 | – |
| 4009/122 | Rockshaft Bearing Bracket CP | 43 | P |
| 4009/123 | Rockshaft Bearing Bracket CP (LH) | 43 | AC |
| 4009/124A | Retention Arm CP | 45 | CU |
| 4009/125 | Spring Anchor Strip CP | 43 | AW |
| 4009/126 | Switch Operating Link CP | 47 | DM |
| 4009/127 | Starter Lever CP | 47 | – |
| 4009/130A | Tripshaft CP | 43 | AF |
| 4009/131 | Bearing Bracket | 43 | AS |
| 4009/132 | Adjustment Screw CP | 47 | EA |
| 4009/133A | Retention Lever Adjustment Arm CP | 45 | CV |
| 4009/135 | Lubricator CP | 43 | AD |
| 4009/136 | Tripshaft Bearing Bracket CP | 43 | AE |
| 4009/138A | Striker Lever CP | 45 | CR |

| Part No. | Part Name | Page | Index Letters |
|---|---|---|---|
| 4009/139 | Retention Locking Lever CP .. | 45 | CP |
| 4009/141B | Retention Lever CP .. .. .. | 45 | CW |
| 4009/142 | Starter Support Plate CP .. .. | 47 | CZ |
| 4009/143 | Starter Arm CP .. .. .. .. | 43 | AO |
| 4009/144A | Starter Lever Guide Bracket CP | 47 | DH |
| 4009/152 | Guide Plate CP .. .. .. .. | 43 | AY |
| 4009/161B | Camshaft Gear CP .. .. .. | 45<br>49 | CN<br>– |
| 4009/162 | Rockshaft Stop Arm .. .. .. | 43 | Q |
| 4009/163 | Stop Pin .. .. .. .. .. | 43 | R |
| 4009/164 | Rockshaft Stop Arm CP .. . | 43 | – |
| 4009/165A | Link .. .. .. .. .. .. | 43 | BB |
| 4009/180A | Clamp .. .. .. .. .. | 45 | CO |
| 4009/181 | Bearing Collar .. .. .. .. | 43 | L |
| 4009/189 | Starter Pivot Bracket .. .. | 47 | DD |
| 4009/199A | Driven Gear .. .. .. | 49 | – |
| 4009/204A | Starter Support Bracket CP .. | 43 | AH |
| 4009/206 | Bearing Bracket CP .. .. .. | 43 | AR |
| 4009/211 | Worm Bearing Bracket CP .. .. | 47 | DG |
| 4009/213A | Driving Gear CP .. .. .. | 45<br>49 | CN<br>– |
| 4009/215A | Drive Shaft .. .. .. .. | 43<br>49 | J<br>– |
| 4009/216A | Driven Gear .. .. .. .. | 49 | – |
| 4009/218A | Driven Gear .. .. .. .. | 49 | – |
| 4009/222 | Driven Gear .. .. .. .. | 49 | – |
| 4009/224 | Driven Gear .. .. .. .. | 49 | – |
| 4009/226 | Driven Gear .. .. .. .. | 49 | – |
| 4009/248 | Driven Gear .. .. .. .. | 49 | – |
| 4009/249 | Drive Shaft CP .. .. .. | 43 | – |
| 4009/251 | Driven Gear .. .. .. .. | 49 | – |
| 4009/274 | Crawler Clutch CP .. .. .. | 43 | BA |
| 4009/356 | Driven Gear .. .. .. .. | 49 | – |
| 4009/358 | Driven Gear .. .. .. .. | 49 | – |
| 4009/363 | Clutch Body .. .. .. .. | 45 | BQ |
| 4009/365 | Driven Gear .. .. .. .. | 49 | – |
| 4009/369 | Driven Gear .. .. .. .. | 49 | – |
| 4010/1 | Cam Spacer .. .. .. .. | 31 | CB |
| 4010/2A | Cam Spacer .. .. .. .. | 31 | CM |
| 4010/3A | Retaining Bush .. .. .. .. | 31 | BF |
| 4010/6 | Traverse Cam Thrust Washer .. | 31 | AQ |
| 4010/10B | Retaining Plate (Front) .. .. | 33 | DQ |
| 4010/11 | Spring Anchor Plate .. .. .. | 31 | G |
| 4010/12A | Strike Bearing .. .. .. | 31 | M |
| 4010/22 | Traverse Front Bearing .. .. | 31 | W |
| 4010/24B | Selector Traverse Camshaft .. | 31 | AK |
| 4010/25A | Line Feed Cam 'B' .. .. .. | 33 | DE |
| 4010/27 | Traverse Lever Pivot Bracket .. | 35 | AD |
| 4010/28B | Cam Spacer .. .. .. .. | 31 | BK |
| 4010/29 | Cam Spacer .. .. .. .. | 33 | DK |
| 4010/30A | Cam Spacer .. .. .. .. | 33 | CR |
| 4010/32A | Cam Spacer .. .. .. .. | 33 | DD |
| 4010/33A | Cam Spacer .. .. .. .. | 33 | DB |
| 4010/34A | Cam Spacer .. .. .. .. | 33 | CZ |
| 4010/37 | Cam Spacer .. .. .. .. | 31 | BS |
| 4010/38C | Pin Resetting Frame .. .. .. | 31 | BE |
| 4010/42A | Retention and Pin Reset Cam 'T' | 31 | BX |
| 4010/48A | Function Reset Cam 'G' .. .. | 33 | CV |
| 4010/53 | Keyboard Reset Cam 'W' .. .. | 31 | BJ |
| 4010/57 | Print and Feed Control Cam 'S' | 31 | CA |
| 4010/58 | Answer Back Cam 'U' .. .. | 31 | BR |
| 4010/59A | Print Cam 'E' .. .. .. .. | 33 | CY |
| 4010/60A | Type Rotation Cam No.5 'Q' .. | 31 | CE |
| 4010/61A | Type Rotation Cam 'K' .. .. | 31 | CG |
| 4010/62A | Type Lift and Shift Cam No.2 'M' | 31 | CK |
| 4010/63A | Selector Plate Lift Cam 'J' .. | 31 | CC |
| 4010/64A | L/F Cam 'D' .. .. .. .. | 33 | DA |
| 4010/66 | Lag Weight Cam 'A' .. .. .. | 33 | DH |
| 4010/67A | Cam Spacer .. .. .. .. | 33 | CX |
| 4010/68A | Cam Spacer .. .. .. .. | 31 | BZ |
| 4010/69A | Transmitter Cam (Start) 'I' .. | 33 | CQ |
| 4010/70A | Transmitter Cam No.1 'L' .. | 31 | CL |
| 4010/71A | Transmitter Cam No.2 'N' .. | 31 | CJ |
| 4010/72A | Transmitter Cam No. 'O' .. .. | 31 | CH |
| 4010/73A | Transmitter Cam No.4 'P' .. | 31 | CF |
| 4010/74A | Transmitter Cam No.5 'R' .. | 31 | CD |
| 4010/75A | Transmitter Cam (Stop) 'F' .. | 33 | CW |
| 4010/77 | Front Camshaft Bearing Block .. | 31 | AJ |
| 4010/81A | Rear Bearing Block CP .. .. | 33 | DP |
| 4010/85A | Pin Box Traverse Lever CP .. | 35 | – |
| 4010/87 | Answer Back Feed Lever CP .. | 33 | EP |
| 4010/88A | Line Feed Bridge Lever CP .. | 31 | K |
| 4010/91 | Traverse Rear Bearing CP .. | 31 | X |
| 4010/93 | Striker Shaft Sub CP .. .. | 31 | N |
| 4010/95B | Traverse Cam CP .. .. .. | 31 | AR |
| 4010/99 | Translator Base Plate Sub CP .. | 31 | A |
| 4010/105 | Pecker Frame CP .. .. .. | 31 | – |
| 4010/106A | Pin Box Traverse Bracket CP .. | 35 | – |
| 4010/107C | Pecker .. .. .. .. .. | 31 | P |
| 4010/108 | Pecker Frame .. .. .. .. | 31 | O |
| 4010/109 | Lubrication Plug Retainer .. | 31 | R |
| 4010/111B | Traverse Link CP .. .. .. | 31 | AG |
| 4010/117A | Front Main Frame Sub CP .. .. | 35 | A |
| 4010/119A | Middle Main Frame CP .. .. | 35 | F |
| 4010/124A | Selector Plate Lift Frame CP .. | 35 | BQ |
| 4010/137 | Selector Lever Rack CP .. .. | 35 | CJ |
| 4010/139 | Print Release Lever CP .. .. | 35 | BO |
| 4010/143A | Aggregate Bellcrank Sub CP .. | 35 | BT |
| 4010/144A | Aggregate Bellcrank CP .. .. | 35 | – |
| 4010/147A | Aggregate Bellcrank Sub CP .. | 35 | BT |
| 4010/148A | Aggregate Bellcrank CP .. .. | 35 | – |
| 4010/150 | Transmitter Lever Adjustment CP | 35<br>39 | CC<br>EH |
| 4010/151 | Transmitter Cam Follower .. | 35<br>39 | CB<br>EC |
| 4010/152 | Transmitter Lever .. .. | 35<br>39 | CA<br>EF |
| 4010/153 | Transmitter Lever CP .. .. | 35 | – |
| 4010/154 | Transmitter Lever CP .. .. | 35 | – |
| 4010/159 | Shoe Arm Carrier CP .. .. | 35 | BM |
| 4010/161 | Rear Pin Box Guide Plate CP .. | 35 | S |
| 4010/163 | Shift and Function Reset Rack CP | 35 | T |
| 4010/165 | Figures and Letters Change Lever CP .. .. .. .. | 35 | K |
| 4010/169 | Figures and Letters Sub Lever CP | 35 | L |
| 4010/171 | Figures and Letters Adjustment Plate CP .. .. .. .. | 35 | J |
| 4010/173 | Figures and Letters Retainer CP | 35 | P |
| 4010/175A | Print Release Pivot Arm CP | 35 | BJ |
| 4010/177B | Letter Feed Arm CP .. .. .. | 35 | BF |
| 4010/179 | Print Hook CP .. .. .. .. | 35 | BD |
| 4010/182 | Dog .. .. .. .. .. | 35 | BC |
| 4010/183 | Print Control Shaft .. .. | 35 | BB |
| 4010/184 | Selector Plate Rack Support .. | 35 | BL |
| 4010/185 | Selector Plate Rack Support .. | 35 | H |
| 4010/186 | Rack .. .. .. .. .. | 35 | O |
| 4010/187 | Main Plate Stay .. .. .. | 35 | G |
| 4010/191 | Support Pin .. .. .. .. | 35 | C |
| 4010/192A | Stop Bracket .. .. .. .. | 35 | CK |
| 4010/193 | Stop Bracket and Cover Support | 35<br>35 | B<br>CL |
| 4010/203A | Sub Plate CP .. .. .. .. | 37 | E |
| 4010/205 | Vertical Lever Rack Support CP | 37 | AA |
| 4010/208 | Vertical Lever Rack CP .. .. | 37 | Z |
| 4010/211 | Function Reset Bracket CP .. | 37 | F |
| 4010/216 | Function Reset Shaft CP .. .. | 37 | – |
| 4010/219B | Function Reset Lever CP .. .. | 37 | X |
| 4010/221 | Function Reset Adjustment Arm CP | 37 | O |
| 4010/225 | Lower Carriage Return and Line Feed Rack Sub CP .. .. .. | 37 | AR |
| 4010/227 | Carriage Return Operating Arm CP | 37 | AU |
| 4010/229 | Carriage Return Adjustment Arm CP | 37 | AT |
| 4010/235B | Carriage Return Latch CP .. | 37 | AL |
| 4010/237 | Carriage Return Lever Sub CP .. | 37 | AK |
| 4010/238A | Carriage Return Vertical Lever CP .. .. .. .. .. | 37 | – |
| 4010/240 | Line Feed Link CP .. .. .. | 37 | AJ |
| 4010/243 | Line Feed Lever CP .. .. .. | 37 | CK |
| 4010/245B | Line Feed Latch CP .. .. .. | 37 | AD |
| 4010/248 | Line Feed Vertical Sub CP .. | 37 | AC |
| 4010/249A | Line Feed Vertical Lever CP .. | 37 | – |
| 4010/251 | Letter Feed Bellcrank CP .. | 37 | CF |
| 4010/255 | Letter Feed Lever CP .. .. | 37 | CD |
| 4010/257 | Letter Feed Latch CP .. .. | 37 | BD |
| 4010/259 | Letter Feed Vertical Lever Sub CP .. .. .. .. .. | 37 | BB |
| 4010/260 | Letter Feed Vertical Lever .. | 37 | – |
| 4010/262B | Inner Abutment Frame CP .. .. | 39 | CX |
| 4010/264A | Outer Abutment Frame CP .. .. | 39 | CV |
| 4010/266 | Abutment Frame Trip Lever CP .. | 39 | CS |
| 4010/270 | Trip Lever CP .. .. .. | 39 | CQ |
| 4010/272 | Trip Lever Bracket CP .. .. | 39 | CM |
| 4010/279B | Shift Bellcrank Sub CP .. .. | 37 | BL |
| 4010/280B | Shift Bellcrank CP .. .. | 37 | – |
| 4010/283A | Print Lever CP .. .. .. | 37 | BT |
| 4010/284 | Transmitter Lever Adjustment .. | 39 | ED |
| 4010/286 | Stop Cam Follower CP .. .. | 39 | EG |
| 4010/287 | Transmitter Lever CP (Stop) .. | 39 | – |
| 4010/288 | Transmitter Lever .. .. .. | 39 | EB |
| 4010/289 | Transmitter Lever CP (Start) .. | 39 | – |
| 4010/292 | Push Rod .. .. .. .. .. | 37 | W |
| 4010/296 | Lag Weight 2nd CP .. .. .. | 39 | DH |
| 4010/297 | Abutment .. .. .. .. | 39 | DM |
| 4010/298 | Lagweight 3rd CP Group 1 .. | 39 | – |
| 4010/300 | Lagweight Release Lever CP .. | 39 | DY |
| 4010/302 | Lagweight Spring Change Lever CP | 39 | DS |

| Part No. | Part Name | Page | Index Letters |
|---|---|---|---|
| 4010/304 | Lagweight Trip Lever CP | 39 | DW |
| 4010/306 | Contact Operating Lever CP | 39 | DZ |
| 4010/309 | Answer Back Trip Link CP | 35 | CT |
| 4010/311 | Traverse Bellcrank | 35 | AW |
| 4010/313 | Traverse Pivot Bracket CP | 35 | AV |
| 4010/315 | Traverse Multiplying Lever CP | 35 | AN |
| 4010/317B | Pin Box End Block CP | 35 | AC |
| 4010/318 | Pin Rack (Large Slots) | 35 | V |
| 4010/319A | Pin Rack (Small Slots) | 35 | W |
| 4010/320A | Selection Pin (Bottom Strike) | 35 | X |
| 4010/321A | Selection Pin (Top Strike) | 35 | Y |
| 4010/322 | Pin Box CP | 35 | – |
| 4010/323 | Answer Back Link Rack | 35 | CV |
| 4010/324 | Guide Bracket | 37 | D |
| 4010/325 | Pivot Bracket | 35 | AM |
| 4010/326 | Retaining Plate | 37 | BA |
| 4010/327 | Letter Feed Lever Abutment | 37 | BK |
| 4010/328 | Carriage Return Driving Block | 37 | AQ |
| 4010/329 | Letter Feed Link | 37 | CG |
| 4010/330 | Steady Bracket | 37 | L |
| 4010/331 | Pin Retainer | 37<br>37 | BX<br>CB |
| 4010/333B | Slide Plate Front | 35 | AO |
| 4010/334 | Pivot Block | 37 | AX |
| 4010/335 | Bellcrank Rack | 35 | CM |
| 4010/336 | Pecker Slide Block | 35 | AZ |
| 4010/337 | Slide Block | 39 | DB |
| 4010/338 | Print Shackle | 37<br>37 | BU<br>BY |
| 4010/339 | Print Adjustment Rod | 37 | CC |
| 4010/340 | Distance Pillar (Long) | 37 | G |
| 4010/341 | Distance Pillar (Short) | 37 | H |
| 4010/343 | Lagweight Release Shaft | 39 | DV |
| 4010/344 | Side Plate (Rear) | 35 | U |
| 4010/345 | Abutment Block | 37 | S |
| 4010/346 | Slide Block | 35 | AJ |
| 4010/347 | Function Lever Pivot | 37 | CL |
| 4010/348 | Front Pin Box Guide Plate | 35 | AU |
| 4010/349 | Sub Plate Rack | 37 | J |
| 4010/350 | Selector Bars Traverse Plate | 35 | AQ |
| 4010/354 | Sub Weight | 39 | DJ |
| 4010/360 | Lag Weight Hook Plate | 39 | DL |
| 4010/361 | Lever Latch | 39 | ET |
| 4010/362A | Automatic Carriage Return Line Feed Lever CP | 39 | – |
| 4010/364A | Lever Sub CP | 39 | ER |
| 4010/365 | Pawl | 39 | EP |
| 4010/366 | Traverse Control Bracket | 35 | AS |
| 4010/367A | Pin Damping Spring (Outer) | 35 | Z |
| 4010/368 | Pin Box Damping Spring (Inner) | 35 | AA |
| 4010/369 | Staple | 35 | AB |
| 4010/371 | Middle Bearing Block | 33 | DO |
| 4010/386 | Balance Weight | 39 | DO |
| 4010/389 | Sub Weight CP | 39 | – |
| 4010/390 | Lag Weight Stop | 39 | DR |
| 4010/395 | Slide Block CP | 33 | EF |
| 4010/397A | Cam Follower CP | 33 | EM |
| 4010/399A | Chopper Lever CP | 33 | EN |
| 4010/401A | Support Bracket CP | 33 | EO |
| 4010/403 | Throwout Lever CP | 35 | CO |
| 4010/404 | Pivot Bracket | 35 | AM |
| 4010/405 | Chopper Cam | 33 | EK |
| 4010/406 | Retaining Disk | 33 | EH |
| 4010/408 | Cam Spacer | 33 | ED |
| 4010/409A | Chopper CP | 33 | – |
| 4010/411 | Lubricator CP | 35 | D |
| 4010/413 | Bracket CP | 35 | B |
| 4010/414A | Pin Box Traverse Lever Sub CP | 35 | AE |
| 4010/416 | Oil Pot CP | 35 | AF |
| 4010/417 | Adjustment Plate CP | 39 | CW |
| 4010/424 | Shim | 37 | AB |
| 4010/435 | Set of Selector Code Plates | 35 | BS |
| 4010/436A | Stop Bracket | 35 | CK |
| 4010/444A | Middle Main Frame CP | 35 | – |
| 4010/445 | Figures and Letters Latch CP | 35 | – |
| 4010/446A | Front Main Frame CP Group 1 and 2 | 35 | – |
| 4010/447 | Print Release Lever and Shoe Carrier CP | 35 | – |
| 4010/448 | Group 1 and 2 Selector Transmitter Lever Assembly CP | 35 | – |
| 4010/449B | Group 1 Rear Frame CP | 39 | – |
| 4010/449B | Group 2 Rear Frame CP | 37 | – |
| 4010/450 | Letter Feed Bellcrank CP | 37 | – |
| 4010/451 | Vertical Lever Rack CP | 37 | – |
| 4010/452 | Lower Carriage Return and Line Feed Rack CP | 37 | – |
| 4010/453 | Print Shackle and Rod CP | 37 | – |
| 4010/454A | Abutment Frame CP | 39 | – |
| 4010/455 | Print Lever CP | 37 | – |
| 4010/458 | Set of Roller Race Parts | 31 | CO |
| 4010/462 | Retention Frame CP | 31 | AT |
| 4010/465 | Retention Frame Guide | 31 | L |
| 4010/466A | Rocker Arm CP | 31 | AU |
| 4010/470 | Control Mechanism Trip Lever CP | 39 | EM |
| 4010/472 | Lagweight Release Shaft | 39 | EN |
| 4010/498 | Function Abutment Plate CP | 37 | R |
| 4010/499 | Carriage Return Cam 'C' | 33 | DC |
| 4010/503 | Carriage Return Lever CP | 37 | CH |
| 4010/509 | Abutment Frame Pivot Plate CP | 37 | C |
| 4010/510A | Rear Frame CP | 37 | A |
| 4010/521 | Detachable Traverse Shaft CP | 31 | – |
| 4010/524 | Traverse Shaft Sub CP | 31 | Y |
| 4010/525 | Traverse Link Lever CP | 31 | AC |
| 4010/526 | Drawbolt | 31 | AB |
| 4010/551A | Camshaft CP | 33 | DN |
| 4010/552 | Retaining Plates (Rear) | 33 | DR |
| 4010/601 | Line Feed Bracket CP | 31 | – |
| 4010/635 | Retaining Plate | 31 | S |
| 4010/639 | Lagweight | 39 | DN |
| 4011/1 | Function Bar Rack | 41 | A |
| 4011/2 | Function Bar (Front) Rack CP | 41 | C |
| 4011/3 | Function Reset Slide Plate | 41 | D |
| 4011/6 | Spring Anchor Support | 41 | F |
| 4011/7 | Screwed Stay Rod | 41 | B |
| 4011/10A | Function Reset Bar CP | 41 | W |
| 4011/11 | Contact Reset Arm | 41 | AD |
| 4011/17A | Function Bar (Position 3) | 41 | K |
| 4011/18A | Function Bar (Position 2) | 41 | J |
| 4011/19A | Function Bar (Position 1) | 41 | G |
| 4011/20 | Function Bar Retaining Plate | 41 | T |
| 4011/22 | Bell and WRU Lever Pivot Bracket CP | 41 | Y |
| 4011/24 | Answer/Back Trip Shaft Bracket CP | 35<br>41 | CW<br>AF |
| 4011/26 | Trip Arm CP | 35 | CQ |
| 4011/28 | Answer Back Trip Lever CP | 35 | CS |
| 4011/30 | WRU? Switch Arm CP | 41 | AB |
| 4011/32 | Bell Switch Arm CP | 41 | Z |
| 4011/35 | Bell Adjustment Plate CP | 41 | AA |
| 4011/47A | Function Bar (Position 4) | 41 | M |
| 4011/50 | Function Bar (Position 5) | 41 | O |
| 4011/62 | Function Bar (Position 8) | 41 | S |
| 4011/75 | Function Bar (Position 6) | 41 | Q |
| 4011/77 | Function Bar (Position 7) | 41 | R |
| 4011/85 | Spring Anchor Bracket | 41 | E |
| 4011/87 | WRU? Switch Operating Arm | 41 | V |
| S4012 | Governor Unit | 57<br>59 | AP<br>– |
| 4012/2 | Governor Cover | 59 | R |
| 4012/3 | Contact Arm Support Plate | 59 | H |
| 4012/4 | Contact Arm Clamp | 59 | N |
| 4012/5 | Contact Arm Spring | 59 | J |
| 4012/6 | Contact Arm Weight | 59 | M |
| 4012/7 | Contact Arm | 59 | L |
| 4012/9 | Governor Stop Plate | 59 | O |
| 4012/11 | Contact Peg Support Plate CP | 59 | P |
| 4012/12 | Governor Body CP | 59 | A |
| 4012/14 | Stop Bracket | 59 | B |
| 4012/15 | Governor Spring CP | 59 | G |
| 4012/16 | Governor Spring Clamp Plate | 59 | C |
| 4013/37 | Insulating Cup | 53 | M |
| 4013/38 | Modified Socket (3-way) | 53 | N |
| 4014/5 | Starter Switch Bracket | 19<br>23 | BF<br>BF |
| 4014/6 | Starter Switch and Cableform | 19<br>23 | BG<br>BG |
| 4014/9 | Resistor CP | 17<br>21 | –<br>– |
| 4014/10 | Resistor Clip | 17<br>*21** | AD<br>*AD* |
| 4014/11 | Resistor Base Plate | 17<br>*21** | AC<br>*AC* |
| 4014/12 | Governing Resistor Unit CP | 17<br>21 | –<br>– |
| 4014/30 | Pivot Bracket CP | 19<br>23 | AX<br>AX |
| 4014/31 | Support Bracket | 19<br>23 | AW<br>AW |
| 4014/32A | Typehead Unit Bearing Block Casting CP | 9<br>11 | –<br>– |
| 4014/35 | Beam Activating Lever CP | 19<br>23 | AZ<br>AZ |
| 4014/38 | Print Rail Coupling CP | 17<br>21 | Z<br>Z |

| Part No. | Part Name | Page | Index Letters |
|---|---|---|---|
| 4014/40 | Print Beam CP | 19 | AY |
| | | 23 | AY |
| 4014/41 | Corrector Track Rail | 17 | AA |
| | | 21 | AA |
| 4014/45A | Letter Feed Arm Sub CP | *9** | *X* |
| | | 11 | X |
| 4014/48 | Letter Feed Pivot Bracket | *9** | *W* |
| | | 11 | W |
| 4014/49A | Letter Feed Arm Bracket CP | 9 | – |
| | | 11 | – |
| 4014/51 | Print Spring Bellcrank CP | *9** | *Z* |
| | | 11 | Z |
| 4014/52 | Print Spring Link | *9** | *AA* |
| | | 11 | AA |
| 4014/53 | Special Nut | *9** | *AB* |
| | | 11 | AB |
| 4014/54 | Print Spring Link CP | 9 | – |
| | | 11 | – |
| 4014/58A | Piston Rod | 25 | DC |
| 4014/67D | Dashpot CP | 19 | BO |
| | | 23 | BO |
| | | 25 | – |
| 4014/68 | Support Pillar | 19 | AV |
| | | 23 | AV |
| 4014/70B | Dashpot Valve | 25 | DG |
| 4014/79 | Dummy Plinth | 85 | A |
| 4014/80 | Flanged Pin | 85 | G |
| 4014/81 | Draw Runner | 85 | J |
| 4014/83 | Draw Runner | 85 | K |
| 4014/87 | Tape Drawer 2nd CP | 85 | – |
| 4014/88 | Tape Drawer 1st CP | 85 | U |
| 4014/89 | Tape Drawer Front | 85 | AF |
| 4014/90A | Drawer Front Pillar | 85 | AG |
| 4014/91 | Packing Piece | 85 | AE |
| 4014/92 | Clip | 85 | AC |
| 4014/99 | Tape Retainer | 85 | E |
| 4014/106 | Knob Retaining Plate | 85 | N |
| 4014/110 | Tape Roller | 85 | F |
| 4014/111 | Pillar | 85 | R |
| 4014/112 | Threaded Pin | 85 | T |
| 4014/113 | Cover Bracket | 85 | H |
| 4014/115 | Tape Retainer | 55 | AZ |
| | | 83 | DF |
| | | 85 | B |
| 4014/116 | Stop Frame CP | 85 | Z |
| 4014/118 | Tape Follower Lever CP | 85 | V |
| 4014/120 | Switch Operating Lever CP | 85 | AA |
| 4014/122 | Bearing Bracket | 85 | X |
| 4014/123 | Switch Bracket | 85 | AL |
| 4014/134 | Bracket | 19 | BM |
| | | 23 | BM |
| 4014/137 | Starter Switchguard CP | 19 | BH |
| | | 23 | BH |
| 4014/138A | Drawer Front Pillar | 85 | AG |
| 4014/139 | Tape Drawer Front | 85 | AF |
| 4014/141 | Tape Drawer Front | 85 | AF |
| 4014/145A | Tape Wheel | 85 | AK |
| 4014/146 | Special Pivot | 83 | AN |
| 4014/150 | Spring Anchor Plate | 7 | – |
| | | 17 | A |
| | | 21 | A |
| 4014/152A | Dummy Plinth CP | 85 | – |
| 4014/153 | Microswitch and Connector CP | 85 | AM |
| 4014/163 | Connexion Block Bracket | 19 | CS |
| | | 23 | CS |
| 4014/172B | Dashpot Cylinder Casting | 25 | DA |
| 4014/174 | Back Plate | 25 | DB |
| 4014/180 | Piston Rod and Valve | 25 | – |
| 4014/181B | Cylinder CP | 25 | – |
| 4014/184 | Capacitor CP | 19 | – |
| | | 23 | – |
| 4014/190 | Dashpot Piston Washer | 25 | DE |
| 4014/199 | Support Block | *19** | *CF* |
| | | 23 | CF |
| 4014/203 | Shim | 17 | S |
| | | 21 | S |
| 4014/209 | Drawer Guide CP | 85 | P |
| 4014/212 | Connecting Link Guide | 25 | CY |
| 4014/213 | Mounting Bracket | 25 | CX |
| 4014/214 | Roller Bracket (LH) | 25 | DJ |
| 4014/215 | Roller Bracket (RH) | 25 | DH |
| 4014/216 | Dashpot Connecting Link | 25 | CZ |
| 4014/399 | Resistor CP | 19 | – |
| | | 23 | – |
| 4014/402 | Cuttings Box Bracket CP | 85 | Q |
| 4014/405 | Cuttings Box Knob | 85 | O |
| 4014/431 | Cuttings Box Sub CP | 85 | M |
| 4014/433 | Cuttings Box CP | 85 | – |
| S4015 | Cover Unit | 7 | – |
| | | 95 | – |
| 4015/17 | Reflector Clamp Plate | 95 | D |
| 4015/21 | Cover Unit Sub CP | 95 | A |
| 4015/29 | Dummy Front | 7 | – |
| 4015/33 | Carriage Return Bar CP | 95 | G |
| 4015/39 | Carriage Return Bar Rear Bracket | 95 | F |
| 4015/43 | Carriage Return Bar Front Guide | 95 | E |
| S4016C | Transmitter Unit | 7 | M |
| | | 77 | – |
| 4016/33 | Contact Assembly 'A' CP | 77 | B |
| 4016/34 | Contact Assembly 'B' CP | 77 | C |
| 4016/35 | Contact Assembly 'C' CP | 77 | D |
| 4016/36 | Start and Stop Contact CP | 77 | E |
| 4016/38A | Lower Contact Spring CP | 77 | P |
| 4016/40 | Contact CP | 77 | N |
| 4016/42 | Upper Contact Spring CP | 77 | O |
| 4016/43 | Abutment and Control Plate | 77 | J |
| 4016/71A | Lower Contact Spring CP | 77 | P |
| 4016/75 | Cover Bracket CP | 77 | H |
| 4016/90 | Contact Plate Support CP | 37 | Y |
| 4016/96 | Upper Contact Spring CP | 77 | O |
| 4016/105 | Upper Contact Spring CP | 77 | O |
| 4016/110 | Lower Contact Spring CP | 77 | P |
| 4016/111 | Upper Contact Spring CP | 77 | O |
| 4016/112 | Lower Contact Spring CP | 77 | P |
| 4016/113 | Contact CP | 77 | – |
| 4016/114 | Bell and WRU Cable CP | 17 | AM |
| | | 21 | AM |
| 4016/115 | Bell Cable CP | 17 | AM |
| | | 21 | AM |
| 4016/116 | WRU Cable CP | 17 | AM |
| | | 21 | AM |
| 4016/117 | Send/Receive Contact Assembly | 77 | F |
| S4017A | Answer Back Unit | 7 | G |
| | | 75 | – |
| 4017/17A | Lag Disk Release Pawl CP | 75 | AM |
| 4017/31 | Release Pawl Latch | 75 | AN |
| 4017/32 | Release Lever Catch CP | 75 | AT |
| 4017/33 | Latch Adjustment Lever CP | 75 | Z |
| 4017/34 | Latch Trip Lever CP | 75 | AQ |
| 4017/35 | Push Rod Suppressor Spindle | 75 | AG |
| 4017/38 | Release Lever Spindle | 75 | AY |
| 4017/41 | Roller Retaining Ring | 75 | H |
| 4017/42 | Suppressor Link Retainer | 75 | D |
| 4017/43 | Push Rod Suppressor CP | 75 | AF |
| 4017/45 | Stop Plate Spacer | 75 | S |
| 4017/46 | Ward Drum Key | 75 | R |
| 4017/47 | Answer Back Selector Lever | 75 | AH |
| 4017/48 | Ratchet Retention Pawl CP | 75 | AK |
| 4017/49 | Trip Bellcrank Extension CP | 75 | BC |
| 4017/50 | Trip Bellcrank Sleeve | 75 | BE |
| 4017/51 | Adjustment Arm CP | 75 | AW |
| 4017/52 | Selector Lever Spindle | 75 | X |
| 4017/56 | Bearing Plate Fixing Block | 75 | B |
| 4017/59 | Ward Drum Spindle Support | 75 | C |
| 4017/60 | Suppressor Link | 75 | AE |
| 4017/61 | Ward Drum Sleeve | 75 | K |
| 4017/63 | Lay Disk Sub CP | 75 | F |
| 4017/64 | Ward Drum Stop Plate | 75 | T |
| 4017/65 | Answer Back Drum Feed Ratchet | 75 | Q |
| 4017/66 | Starting Lever Cam | 75 | P |
| 4017/67 | Latch Trip Cam | 75 | O |
| 4017/68 | Cam Clamping Ring | 75 | N |
| 4017/69 | Ward Drum CP | 75 | L |
| 4017/71 | Trip Operating Bellcrank CP | 75 | Y |
| 4017/72 | 'Here Is' Trip Bellcrank | 75 | BD |
| 4017/75 | Release Lever Trip Arm CP | 75 | BA |
| 4017/76 | Answer Back Release Lever CP | 75 | AV |
| 4017/77 | Trip Arm Guide | 75 | AZ |
| 4017/79 | Answer Back Frame CP | 75 | A |
| 4017/80 | Trip Adjustment Lever | 75 | AP |
| 4017/89 | Answer Back Drum Assembly | 75 | – |
| 4017/95 | Latch and Trip Lever CP | 75 | – |
| 4017/96 | Adjustment and Release Lever CP | 75 | – |
| 4017/135 | Shim | 7 | H |
| 4018/3 | Mounting Bracket CP | 59 | A |
| 4018/5 | Contact Blade CP | 59 | C |
| 4018/7 | Contact Blade CP | 59 | B |
| 4018/9 | Retaining Plate | 59 | G |
| 4018/10 | Cover | 59 | H |
| 4018/14 | Mounting Strip | 57 | AC |
| 4018/15A | Mounting Bracket | 57 | AD |
| 4018/30 | Contact Peg | 59 | Q |

| Part No. | Part Name | Page | Index Letters |
|---|---|---|---|
| 4019/2C | Drive Shaft CP | 43 | – |
| 4019/3C | Drive Shaft | 43 | J |
| | | 49 | – |
| 4019/4 | Bearing Bracket CP | 43 | AS |
| 4019/6A | Driven Gear | 49 | – |
| 4019/7A | Driven Gear | 49 | – |
| 4019/11C | Dog | 47 | ED |
| 4019/12 | Gear Change Fork CP | 47 | EH |
| 4019/15 | Gear Lever | 47 | EJ |
| 4019/17A | Driven Gear | 49 | – |
| 4019/19 | Gear Lever | 47 | EJ |
| 4019/27 | Driven Gear | 49 | – |
| 4019/29 | Gear Lever | 47 | EJ |
| 4019/30 | Driven Gear | 49 | – |
| 4019/31 | Driven Gear | 49 | – |
| 4019/32 | Driven Gear | 49 | – |
| 4019/33 | Gear Lever | 47 | EJ |
| 4019/34 | Gear Lever | 47 | EJ |
| 4019/35 | Drive Shaft | 43 | J |
| | | 49 | – |
| 4019/36 | Drive Shaft CP | 43 | – |
| 4019/37 | Driven Gear | 49 | – |
| 4019/38 | Driven Gear | 49 | – |
| 4019/39 | Driven Gear | 49 | – |
| S4020B | Operation Counter | 9 | AF |
| | | 11 | AF |
| | | 81 | – |
| 4020/1B | Mounting Plate Sub CP | 81 | A |
| 4020/4A | Worm Wheel CP | 81 | J |
| 4020/7 | Actuating Lever Sub CP | 81 | C |
| 4020/9 | Pawl CP | 81 | D |
| 4020/10 | Actuating Lever CP | 81 | – |
| 4020/11 | Side Plate Sub CP | 81 | B |
| 4020/13 | Side Plate CP | 81 | – |
| 4020/14 | Ratchet Shaft CP | 81 | H |
| 4020/17 | Retention Pawl CP | 81 | F |
| 4020/18 | Side Plate Bracket | 81 | G |
| 4020/20 | Compensator Cam Lever Extension | 81 | O |
| 4020/31 | Clamping Plate CP | 81 | N |
| 4020/37 | Support Bar | 81 | P |
| S4022A | Reperforating Unit | 7 | N |
| | | 83 | – |
| 4022/2 | Reperforating Support Bracket CP | 83 | A |
| 4022/3 | Selector Bar No. 1 | 83 | C |
| 4022/4 | Selector Bar No. 2 | 83 | D |
| 4022/5 | Selector Bar No. 3 | 83 | E |
| 4022/6 | Selector Bar No. 4 | 83 | F |
| 4022/7 | Selector Bar No. 5 | 83 | G |
| 4022/8A | Feed Hole Interposer | 83 | H |
| 4022/10 | Adjustment Plate CP | 83 | R |
| 4022/19 | Selector Bellcrank (Upper) CP | 83 | K |
| 4022/21 | Selector Bellcrank (Lower) CP | 83 | L |
| 4022/22 | Push Rod No. 1 | 83 | M |
| 4022/23 | Push Rod No. 2 | 83 | N |
| 4022/24 | Push Rod No. 3 | 83 | O |
| 4022/25 | Push Rod No. 4 | 83 | P |
| 4022/26 | Push Rod No. 5 | 83 | Q |
| 4022/27 | Retaining Plate (Short) | 83 | S |
| 4022/28 | Retaining Plate (Long) | 83 | T |
| 4022/30A | Support Bracket CP | 83 | BT |
| 4022/31 | Pivot Clamp | 83 | AO |
| 4022/37B | Front Guide Plate | 83 | CX |
| 4022/41 | Feed Pawl CP | 83 | CC |
| 4022/43 | Feed Lever CP | 83 | CB |
| 4022/49 | Punching Arm CP | 83 | AB |
| 4022/53A | Driving Plate | 83 | AE |
| 4022/55 | Reperforating Out Lever CP | 83 | AK |
| 4022/57 | Support Plate CP | 83 | AC |
| 4022/60 | Interposer | 83 | AG |
| 4022/61 | Retainer | 83 | AH |
| 4022/62 | Punching Arm Assembly | 83 | – |
| 4022/64A | Punch Block Head Casting | 83 | AS |
| 4022/65 | Set of Punchers | 83 | AV |
| 4022/66B | GRP1, GRP2 Punch Block Head Sub CP | 83 | – |
| 4022/71 | Anvil CP | 83 | V |
| 4022/75 | Retention Lever Bracket CP | 83 | CH |
| 4022/77 | Guide Rack CP | 83 | W |
| 4022/78 | Clamp Block Support | 83 | AP |
| 4022/79 | Punch Withdrawal Plate | 83 | Y |
| 4022/80 | Retaining Plate | 83 | X |
| 4022/81 | Retaining Rod | 83 | U |
| 4022/82 | Joint Piece | 83 | CG |
| 4022/84 | Retention Wheel | 83 | BB |
| 4022/86 | Roller Bracket | 83 | DB |
| 4022/87 | Cover Pillar | 83 | DG |
| 4022/88 | Reperforating Top Cover | 83 | DO |
| 4022/92A | Driving Plate Retainer | 83 | AF |
| 4022/93 | Side Cover | 83 | DQ |
| 4022/96A | Stop Plate | 83 | CZ |
| 4022/97 | Shim | 83 | DA |
| 4022/102 | Tape Retainer | 83 | DJ |
| 4022/104 | Mounting Block | 83 | CY |
| 4022/107 | Retaining Sleeve | 83 | BX |
| 4022/108 | Support Plate | 83 | BU |
| 4022/129 | Feed Ratchet | 83 | AZ |
| 4022/132 | Retention Lever CP | 83 | CL |
| 4022/135 | Cuttings Chute CP | 83 | DM |
| 4022/138 | Cuttings Chute Cover | 83 | DN |
| 4022/139 | Reperforating Side Cover CP | 83 | DP |
| 4022/142 | Lateral Tape Guide CP | 83 | DH |
| 4022/144 | Guide Shoe | 83 | DK |
| 4022/145 | Guide | 83 | DL |
| 4022/146 | Guide Spring CP | 83 | – |
| 4022/147 | Lateral Tape Guide CP | 83 | – |
| 4022/150 | Die Assembly (Centre Feed) | 83 | AU |
| 4022/151 | Die Assembly (Advance Feed) | 83 | AU |
| 4022/152 | Punch and Die Assembly (Centre Feed) | 83 | – |
| 4022/153 | Punch and Die Assembly (Advance Feed) | 83 | – |
| 4023/15A | Platen End Cap | 63 | L |
| 4023/30 | Support Bar | 63 | AA |
| 4023/32 | Feed Pin | 63 | H |
| 4023/34 | Front Roller Arm Pivot | 63 | AJ |
| 4023/35 | Camshaft | 63 | AL |
| 4023/37 | Nut Plate | 63 | AD |
| 4023/39B | Ratchet Feed Support Plate CP | 63 | – |
| 4023/40 | Ratchet Feed Support Plate Sub CP | 63 | BC |
| 4023/43 | Bearing Bracket | 63 | R |
| 4023/44 | Platen Retention Wheel | 63 | M |
| 4023/47 | Clamp Wheel | 63 | N |
| 4023/49 | Stripper Bar | 63 | BW |
| 4023/50 | Pressure Roller Arm (LH) CP | 63 | AE |
| 4023/51 | Rear Roller Arm Pivot | 63 | AK |
| 4023/54 | Pressure Roller Arm (RH) CP | 63 | AF |
| 4023/56 | Retention Roller Bracket CP | 63 | AU |
| 4023/64 | Roller CP | 63 | AG |
| 4023/67 | Distance Collar | 63 | U |
| 4023/68 | Platen Feed Ratchet | 63 | K |
| 4023/69 | Platen Feed Ratchet CP | 63 | – |
| 4023/73 | Sprocket Feed Change Lever | 63 | S |
| 4023/103A | Pin Retraction Cam | 63 | G |
| 4023/109 | Paper Guide Retainer (LH) CP | 63 | AN |
| 4023/110 | Paper Guide Retainer (RH) CP | 63 | AO |
| 4023/111 | Pivot Bracket Guide | 63 | AP |
| 4023/112 | Window | 95 | B |
| 4023/115 | Paper Guide Bar Lever (LH) CP | 63 | BR |
| 4023/116 | Paper Guide Bar Lever (RH) CP | 63 | BS |
| 4023/120 | Paper Guide CP | 63 | AB |
| 4023/121 | Platen Sub CP | 63 | E |
| 4023/122 | Platen End Cap CP | 63 | O |
| 4023/123A | Platen Spindle CP | 63 | – |
| 4023/124 | Platen Final CP | 63 | – |
| 4023/125 | Pressure Rollers CP | 63 | – |
| 4023/154 | Spindle | 63 | F |
| 4023/186 | Control Mechanism CP GRP1 | 65 | – |
| 4040/12 | Bearing Retainer | 57 | H |
| | | 61 | S |
| 4040/13 | Bearing Cap (Commutator End) | 57 | F |
| 4040/14 | Bearing Cap | 57 | G |
| | | 61 | R |
| 4040/30 | Inner Race Thrust Collar | 57 | B |
| | | 61 | M |
| 4040/31 | Gasket | 57 | D |
| | | 61 | N |
| 4040/32 | Special Washer | 57 | K |
| | | 61 | Q |
| 4040/37 | Bearing Clamp Plate | 57 | C |
| | | 61 | L |
| 4040/71 | Fan End Cover | 57 | U |
| 4040/79 | Brush Box Cover CP | 57 | A |
| 4040/85B | Field Magnet Sub CP | 57 | Q |
| 4040/92 | Armature | 57 | L |
| 4040/99 | Brush Box | 57 | V |
| 4040/100 | Brush Mounting Plate | 57 | N |
| 4040/101 | Brush Slide | 57 | W |
| 4040/115 | Bearing Cap | 61 | P |
| 4040/116 | Armature CP | 57 | – |
| 4040/126 | Field Coil CP | 57 | R |
| 4040/128 | Commutator End Cover | 57 | M |
| 4040/129 | Commutator End Cover CP | 57 | – |
| 4040/130 | Field Magnet CP | 57 | – |
| 4040/131 | Commutator End Cover and Body CP | 57 | – |
| 4040/132 | Motor CP | 57 | – |

| Part No. | Part Name | Page | Index Letters |
|---|---|---|---|
| S4098 | Cover Unit | 7 | – |
| | | 95 | – |
| 4098/1 | Cover Unit Sub CP | 95 | A |
| S4151 | Tape Reader Casting Assembly | 7 | 0 |
| | | 87 | – |
| | | 89 | – |
| | | 91 | – |
| 4151/1A | Pecker Operating Cam 'GA' | 33 | CT |
| 4151/2A | Cam Spacer | 33 | CS |
| 4151/3A | Cam Spacer | 33 | CU |
| 4151/15 | Combination Bar CP | 71 | FG |
| | | 93 | V |
| 4151/16 | Run Out Bar CP | 71 | FF |
| | | 93 | U |
| 4151/17 | Trip Bar CP | 71 | FH |
| | | 93 | W |
| 4151/21 | Cover Unit Sub CP | 95 | A |
| 4151/26 | Set of Combination Bars CP | 71 | – |
| | | 93 | – |
| 4151/31A | Base Plate CP | *9** | *AV* |
| | | 11 | AV |
| 4151/34A | Roller Lever CP | *9** | *AW* |
| | | 11 | AW |
| 4151/36 | Comb Bar Reset Lever CP | 67 | AV |
| | | 93 | AL |
| 4151/37A | Delay Plate CP | *9** | *AU* |
| | | 11 | AU |
| 4151/39 | Disable Lever CP | *9** | *AZ* |
| | | 11 | AZ |
| 4151/41 | Latch Lever CP | 67 | BH |
| | | 93 | AX |
| 4151/42 | Reset Mechanism CP | 67 | – |
| | | 93 | – |
| 4151/43 | Reset Lever Bearing Bracket | 67 | AU |
| | | 93 | AK |
| 4151/44 | Roller Pivot Retainer | 67 | BC |
| | | 93 | AS |
| 4151/45 | Keep Plate | 71 | EQ |
| | | 93 | T |
| 4151/48 | Retaining Plate | *87** | *BG* |
| | | *89** | *BG* |
| | | 91 | BG |
| 4151/49 | Lower Guide Bracket | *87** | *BF* |
| | | *89** | *BF* |
| | | 91 | BF |
| 4151/54 | Taut Tape Lever CP | *87** | *AN* |
| | | *89** | *AN* |
| | | 91 | AN |
| 4151/56 | Jockey Lever CP | *87** | *AT* |
| | | *89** | *AT* |
| | | 91 | AT |
| 4151/58 | Taut Tape Arm | *87** | *AM* |
| | | *89** | *AM* |
| | | 91 | AM |
| 4151/59 | Roller Bracket | *87** | *AO* |
| | | *89** | *AO* |
| | | 91 | AO |
| 4151/62B | Peckers Withdrawal Lever Sub CP | 31 | C |
| 4151/64 | Line Feed Bracket CP | 31 | B |
| 4151/70 | No. 5 Pecker CP | 87 | N |
| | | *89** | *N* |
| | | *91** | *N* |
| 4151/71 | No. 4 Pecker CP | 87 | M |
| | | *89** | *M* |
| | | *91** | *M* |
| 4151/72 | No. 3 Pecker CP | 87 | L |
| | | *89** | *L* |
| | | *91** | *L* |
| 4151/73 | No. 2 Pecker CP | 87 | K |
| | | *89** | *K* |
| | | *91** | *K* |
| 4151/74 | No. 1 Pecker CP | 87 | J |
| | | *89** | *J* |
| | | *91** | *J* |
| 4151/75B | Tape Out Seeker | 87 | O |
| | | *89** | *O* |
| | | *91** | *O* |
| 4151/76 | Tape Out Frame | 87 | AV |
| | | *89** | *AV* |
| | | *91** | *AV* |
| 4151/77 | Top Rack | *87** | *AW* |
| | | *89** | *AW* |
| | | 91 | AW |
| 4151/80 | Bearing Bracket CP | *87** | *BE* |
| | | *89** | *BE* |
| | | 91 | BE |
| 4151/81 | Feed Pawl | *87** | *BW* |
| | | 89 | BW |
| | | *91** | *BW* |
| 4151/83 | Feed Lever CP | *87** | *BV* |
| | | 89 | BV |
| | | *91** | *BV* |
| 4151/84 | Feed Suppression Lever | *87** | *CH* |
| | | 89 | CH |
| | | *91** | *CH* |
| 4151/86 | Feed Link CP | *87** | *BY* |
| | | 89 | BY |
| | | *91** | *BY* |
| 4151/87 | Feed Latch | *87** | *BZ* |
| | | 89 | BZ |
| | | *91** | *BZ* |
| 4151/89 | Ratchet | *87** | *BN* |
| | | 89 | BN |
| | | *91** | *BN* |
| 4151/90 | Clamp | *87** | *BO* |
| | | 89 | BO |
| | | *91** | *BO* |
| 4151/91 | Tape Feed Spindle | 87 | B |
| | | *89** | *B* |
| | | *91** | *B* |
| 4151/92 | Guide Plate | *87** | *CC* |
| | | 89 | CC |
| | | *91** | *CC* |
| 4151/98 | Retention Lever CP | *87** | *BQ* |
| | | 89 | BQ |
| | | *91** | *BQ* |
| 4151/104 | Jockey Lever CP | 87 | AC |
| | | *89** | *AC* |
| | | *91** | *AC* |
| 4151/105 | Jockey Cam | 87 | V |
| | | *89** | *V* |
| | | *91** | *V* |
| 4151/109 | Peckers Rack | 87 | R |
| | | *89** | *R* |
| | | *91** | *R* |
| 4151/110 | Code Bar Suppressor | 87 | Y |
| | | *89** | *Y* |
| | | *91** | *Y* |
| 4151/115 | Bearing Block | *87** | *AF* |
| | | *89** | *AF* |
| | | 91 | AF |
| 4151/116 | Spacer | 87 | C |
| | | *89** | *C* |
| | | *91** | *C* |
| 4151/124 | Tape Plate Final CP | *87** | *AE* |
| | | *89** | *AE* |
| | | 91 | AE |
| 4151/126 | Trip Bar | *87** | *BA* |
| | | *89** | *BA* |
| | | 91 | BA |
| 4151/127 | Code Bar | *87** | *AY* |
| | | *89** | *AY* |
| | | 91 | AY |
| 4151/128 | Taut Tape Bar | *87** | *AZ* |
| | | *89** | *AZ* |
| | | 91 | AZ |
| 4151/129 | Manual Trip Lever CP | 13 | BN |
| 4151/131 | Manual Trip Interposer CP | 13 | BS |
| 4151/132 | No. 1 Code Frame | 13 | BD |
| 4151/133 | No. 2 Code Frame | 13 | BE |
| 4151/134 | No. 3 Code Frame | 13 | BF |
| 4151/135 | No. 4 Code Frame | 13 | BG |
| 4151/139 | No. 5 Code Frame | 13 | BH |
| 4151/141 | Washer Plate | 13 | BX |
| 4151/143 | Bearing Bracket LH CP | 13 | BO |
| 4151/145 | Bearing Bracket RH CP | 13 | BV |
| 4151/146 | Spindle | 13 | BL |
| 4151/147 | Shim | 13 | BW |
| 4151/150 | Disable Lever CP | 71 | EZ |
| | | 93 | AY |
| 4151/153 | RH Keyboard Side Plate CP | 93 | AD |
| 4151/155 | LH Keyboard Side Plate CP | 93 | AE |
| 4151/158 | Combination Bed Sub Assembly | 93 | – |
| 4151/160 | Transfer Lever CP | *87** | *BH* |
| | | *89** | *BH* |
| | | 91 | BH |
| 4151/161 | Rack Plate | *87** | *BC* |
| | | *89** | *BC* |
| | | 91 | BC |
| 4151/162 | Top Retaining Plate CP | *87** | *BB* |
| | | *89** | *BB* |
| | | 91 | BB |
| 4151/165 | Manual Trip Mounting Bracket | 71 | EV |
| | | 93 | 0 |

| Part No. | Part Name | Page | Index Letters |
|---|---|---|---|
| 4151/166 | Link Bracket | 71 | ES |
| | | 93 | L |
| 4151/167 | Trip Bracket | 71 | ER |
| | | 93 | K |
| 4151/170 | Trip Arm | 13 | BU |
| 4151/172 | Cover Plate | 71 | EP |
| | | 93 | S |
| 4151/173 | Cover | 87 | CK |
| | | *89** | *CK* |
| | | *91** | *CK* |
| 4151/174 | Cover Plate | 7 | – |
| | | 9 | – |
| | | 11 | – |
| 4151/210 | Cover Unit | 7 | – |
| | | 95 | – |
| 4151/219 | Feed Lever Sub Assembly | 87 | – |
| | | 89 | – |
| | | 91 | – |
| 4151/220 | Code Bars Assembly | 87 | – |
| | | 89 | – |
| | | 91 | – |
| 4151/221 | Tape Plate Assembly | 87 | – |
| | | 89 | – |
| | | 91 | – |
| 4151/222 | Code Frames Assembly | *9** | *BC* |
| | | 11 | BC |
| | | 13 | – |
| 4151/228 | Keyboard Mask CP (3 Row) | 7 | E |
| 4151/229 | Trip Bracket Assembly CP | 71 | – |
| | | 93 | – |
| 4151/237 | Keyboard Mask CP (4 Row Single Space Pad) | 7 | E |
| 4151/240 | Keyboard Mask CP (4 Row Treble Space Pad) | 7 | E |
| 4151/243 | Dummy Front | 7 | – |
| 4151/244 | Dummy Keyboard Unit CP | 7 | D |
| | | 93 | – |
| 4151/247 | Cover Unit Sub CP | 95 | A |
| 4151/249 | Cover Unit | 7 | – |
| | | 95 | – |
| 4151/251A | Switch Knob | 87 | X |
| | | *89** | *X* |
| | | *91** | *X* |
| 4151/254 | Cover | 87 | CK |
| | | *89** | *CK* |
| | | *91** | *CK* |
| 4151/263 | Side Plate CP | *87** | *AH* |
| | | *89** | *AH* |
| | | 91 | AH |
| 4151/264 | GRP1 Tape Reader Casting Sub Assembly | 87 | A |
| | | 89 | A |
| | | *91** | *A* |
| 4151/270A | Switch Camshaft | 87 | U |
| | | *89** | *U* |
| | | *91** | *U* |
| 4151/273 | Trip Off CP | 39 | – |
| 4151/283 | Tie Rod | 93 | AF |
| 4151/288 | Strap | *87** | *AX* |
| | | *89** | *AX* |
| | | 91 | AX |
| 4151/291 | Taut Tape Frame CP | 13 | BJ |
| 4151/292 | Taut Tape Interposer CP | 13 | BT |
| 4151/302 | Code Bar Suppressor Guide | 87 | AA |
| | | *89** | *AA* |
| | | *91** | *AA* |
| 4151/304 | Tape Gate CP | *87** | *AK* |
| | | *89** | *AK* |
| | | 91 | AK |
| 4151/308 | Transmitter Cover CP | 77 | S |
| 4151/344 | Peckers and Tape Out Seeker CP | 87 | – |
| | | 89 | – |
| | | 91 | – |
| 4163/3B | Motor Support Bracket | 61 | X |
| 4163/4A | Motor Base Plate | 61 | W |
| 4163/5 | Plug | 61 | AD |
| S4164 | GRP1, GRP2 Combination Bar Unit | 71 | – |
| 4164/1 | GRP1, GRP2 Comb Bar Unit Sub Assembly | 71 | – |
| 4169/39 | Trip Bellcrank CP | 39 | CN |
| 4173/122 | Bell Function Bar Extension | 41 | U |
| 4176/44 | Cover Plate | 19 | CW |
| | | 23 | CW |
| 4216/1 TO 4216/33 | Answer Back Wards | 75 | M |
| 4228/4A | Fan End Cover | 61 | U |
| 4228/5A | Switch End Cover | 61 | K |
| 4228/11A | Link | 61 | F |
| 4228/16A | Tie Bar | 61 | V |
| 4228/20A | Anchor Plate | 61 | D |
| 4228/31A | Stator CP | 61 | A |
| 4228/32A | Rotor CP | 61 | B |
| 4228/38 | Switch Plate | 61 | C |
| 4228/43 | Roller | 61 | E |
| 4228/44 | Roller | 61 | E |
| 4228/50 | GRP1 Switch Final Assembly | 61 | J |
| 4228/51 | Switch End Cover CP | 61 | – |
| 4228/54 | GRP1 Switch Mechanism CP | 61 | – |
| 4228/54 | GRP2 Switch Mechanism CP | 61 | – |
| 4242/1 | Back Spacing Pawl Guide | 83 | CN |
| 4242/2 | Eccentric Carrier CP | 83 | CS |
| 4242/4 | Clamp Plate | 83 | CU |
| 4242/5 | Pawl Carrier Assembly | 83 | – |
| 4242/6 | Pawl Carrier CP | 83 | CO |
| 4242/8 | Back Space Pawl CP | 83 | CP |
| 4242/24 | Pawl Guide | 83 | BZ |
| 4242/25 | Support Pin CP | 83 | BE |
| 4242/50 | Base Plate Unit | 83 | – |
| 4242/51 | Base Plate and Racks | 83 | B |
| S4275 | Main Base Unit | 9 | A |
| | | *11** | *A* |
| | | 17 | – |
| | | 19 | – |
| | | 21 | – |
| | | 23 | – |
| 4275/5 | Capacitor Clip | *19** | *CK* |
| | | 23 | CK |
| 4275/9 | Tagboard CP | 19 | BJ |
| | | 23 | BJ |
| 4275/10 | Electromagnet Spark Quench CP | 19 | – |
| | | 23 | – |
| 4275/11 | Connexion Plate | 19 | BY CO |
| | | *23** | *BY CO* |
| 4275/14 | Fixing Plate | 17 | AQ |
| | | 21 | AQ |
| 4275/15 | 12 Way Plug CP | 17 | – |
| | | 21 | – |
| 4275/17 | Pillar | 19 | BV |
| | | *23** | *BV* |
| 4275/18 | Filter Unit Base Plate | 19 | BU |
| | | *23* | *BU* |
| 4275/19 | R.I.S. Unit Connexion Block Cableform CP | 79 | P |
| 4275/20 | R.I.S. Unit Connexion Block Cableform CP | 79 | Q |
| 4275/21 | Transmitter Cableform CP | 17 | – |
| | | 21 | – |
| 4275/22 | Contact Mounting Plate CP | 77 | A |
| 4275/23 | Base Casting and Pin CP | 19 | AR |
| | | 23 | AR |
| 4275/24 | Motor Connexion Socket CP | 19 | – |
| | | 23 | – |
| 4275/25 | Filter Unit CP | 19 | – |
| | | 23 | – |
| 4275/26 | 3 Way Plug and Plate CP | 17 | – |
| | | 21 | – |
| 4275/27 | Fixing Plate | 17 | AO |
| | | 21 | AO |
| 4275/28 | 3 Way Plug and Plate CP | 17 | – |
| | | 21 | – |
| 4275/29 | Electrolytic Capacitor CP | 19 | – |
| | | 23 | – |
| 4275/30 | Motor Capacitor CP | 19 | – |
| | | 23 | – |
| 4275/32 | Capacitor Strap | *19** | *CE* |
| | | 23 | CE |
| 4275/33 | Signals Radio Interference Suppression Unit | 9 | AT |
| | | *11** | *AT* |
| | | 19 | CV |
| | | 23 | CV |
| | | 79 | – |
| 4275/49 | Cable Cleat | 19 | CU |
| | | 23 | CU |
| S4277 | Spring Drum and E.O.L.I. | 9 | C |
| | | *11** | *C* |
| | | 53 | – |

| Part No. | Part Name | Page | Index Letters |
|---|---|---|---|
| 4277/1 | End of Line Indicator Mounting Bracket | 53 | A |
| 4277/2A | E.O.L.I. Lamp Bracket | 53 | J |
| 4277/6 | Inner Half Spring Drum CP | 53 | P |
| 4277/7 | Outer Half Spring Drum CP | 53 | S |
| 4277/8 | Spring Drum Flange | 53 | T |
| 4277/9 | Switch Bracket CP | 53 | B |
| 4277/10 | Microswitch Cover CP | 53 | E |
| 4277/11 | Cam | 53 | U |
| 4277/12 | Cam Follower Arm | 53 | G |
| 4277/17 | Spring Drum CP | 53 | – |
| 4277/18 | Carriage Return Tape CP | 9 | G |
| | | *11** | *G* |
| | | 53 | W |
| 4277/19 | Microswitch and Cableform CP | 53 | – |
| S4278 | Selector Unit (Single Speed Model) | *9** | *S* |
| | | *11** | *S* |
| | | 43 | – |
| | | 49 | – |
| 4278/1 | Selector Unit Sub Assembly | 43 | – |
| 4278/3 | Adjustment Plate CP | 45 | BZ |
| 4278/4 | Trigger CP | 45 | BU |
| 4278/5 | Clutch Frame CP | 45 | BT |
| 4278/6 | Selector Camshaft | 45 | BO |
| 4278/11 | Spring Guide | 45 | BW |
| 4278/12 | Clamp Block | 45 | BX |
| 4278/14 | Clamp Plate | 33 | DZ |
| | | 45 | CB |
| 4278/17 | Selector Clutch Band | 45 | CD |
| 4278/20 | Selector Camsleeve CP | 45 | BS |
| 4278/21 | Rockshaft Operating Arm | 43 | X |
| 4278/22 | Starter Main Plate | 43 | D |
| 4278/23 | Adjustment Bracket | 43 | E |
| 4278/25 | Mounting Bracket CP | 43 | C |
| 4278/26 | Starter Main Plate Assembly | 43 | – |
| 4278/27 | Armature K.O. Link | 47 | EN |
| 4278/28 | Armature Knock Out Link CP | 47 | – |
| 4278/31 | Retention Locking Lever CP | 47 | – |
| 4278/32 | Lever CP | 47 | ER |
| 4278/34 | Cam CP | 47 | ET |
| 4278/37 | Knockout Lever CP | 47 | EM |
| 4278/39 | Lever CP | 47 | EQ |
| 4278/40 | Send/Receive Delay Lever CP | 47 | EL |
| 4278/42 | Rockshaft CP | 43 | – |
| 4278/43 | Rockshaft Sub CP | 43 | S |
| 4278/45 | Retention Lifting Arm CP | 43 | – |
| 4278/46 | Lever CP | 43 | U |
| 4278/48 | Retention Lifting Arm Sub CP | 43 | T |
| 4278/49 | Selector Clutch Assembly | 45 | – |
| 4278/50 | Clutch Band Clamp | 45 | CE |
| 4278/61 | Orientation Casting | 45 | BE |
| 4278/62 | Orientation CP | 45 | – |
| S4279 | Selector Unit (Gear Box Model) | 9 | S |
| | | *11** | *S* |
| | | 43 | – |
| | | 49 | – |
| 4279/1 | Selector Unit Sub Assembly | 43 | – |
| S4280 | Translator Unit | 9 | Q |
| | | *11** | *Q* |
| | | 37 | – |
| | | 39 | – |
| 4280/1 | Translator Unit Base Plate CP GRP1 | 31 | – |
| 4280/2 | Translator Unit 1st Stage CP GRP1 and 2 | 31 | – |
| | | 33 | – |
| | | 37 | – |
| 4280/3 | Translator Unit 2nd Stage CP GRP1 to 5 | 35 | – |
| | | 37 | – |
| 4280/7 | Compensator Lever CP | 31 | AL |
| 4280/9 | Clutch Trigger CP | 33 | DT |
| 4280/10 | Outer Band Anchor CP | 33 | DY |
| 4280/11 | Clutch Band Retainer | 33 | DU |
| 4280/12 | Clamp Block | 33 | DV |
| 4280/14 | Compensator Cam 'VA' | 31 | BM |
| 4280/16 | Translator Clutch Band | 33 | DW |
| 4280/19 | Trigger Stop and Frame | 33 | DS |
| 4280/21 | Bearing Cylinder | 33 | DX |
| 4280/22 | Clutch Band Clamp | 33 | EB |
| 4280/35 | Traverse Camshaft CP | 31 | – |
| S4281 | Platen Unit | 9 | V |
| | | *11** | *V* |
| | | 63 | – |
| | | 65 | – |
| 4281/3 | Platen Side Plate LH CP | 63 | B |
| 4281/4 | Platen Side Plate RH CP | 63 | A |
| 4281/6 | Platen Sub Plate CP | 63 | V |
| S4282 | Motor Unit (Governed) | 9 | – |
| | | 11 | – |
| | | 57 | – |
| 4282/1 | Resistor Board CP | 57 | – |
| 4282/2 | Inductor CP | 57 | AJ |
| 4282/3 | Plug Assembly CP | 57 | – |
| 4282/4 | Motor Base | 57 | Y |
| 4282/5 | Capacitor CP | 57 | – |
| 4282/6 | Governor Contacts CP | 57 | AQ |
| | | 59 | – |
| S4283 | Synchronous Motor Unit | 9 | – |
| | | 11 | – |
| | | 61 | – |
| 4283/1 | Motor Fan | 61 | AA |
| 4283/2 | Motor Support Plate | 61 | Z |
| S4284 | Electromagnet Unit | 17 | B |
| | | 21 | B |
| | | 29 | – |
| 4284/2 | Armature Link Pivot Bracket CP | 29 | N |
| 4284/5 | Armature Link CP | 29 | O |
| S4293 | Function Bar Unit | 37 | – |
| | | 41 | – |
| S4294 | Machine Sub Assembly | 7 | A |
| | | 9 | – |
| | | 11 | – |
| Ref. 522A | Governed Motor | 57 | – |
| Ref. 526C | Synchronous Motor | 61 | – |
| 23923A | Taper Pin | 51 | AP |
| AA NUMBERS | | | |
| AA16/1 | Motor Brush CP | 57 | X |
| BO NUMBERS (BOUGHT OUT) | | | |
| BO 1701 | Insulating Sleeve | 17 | AH |
| | | *21** | *AH* |
| | | 79 | L |
| BO 2575 | Ballrace | 31 | BP |
| BO 2633/1 | Ink Ribbon (Black) | 9 | P |
| | | *11** | *P* |
| BO 2633/2 | Ink Ribbon (Black and Red) | 9 | P |
| | | *11** | *P* |
| BO 2636/1 | Resistor | 19 | BN |
| | | 23 | BN |
| BO 2659 | Capacitor | 57 | AF |
| BO 2670A | 3 Pin 5 Amp Socket | 27 | P |
| BO 2845 | Capacitor | 79 | F |
| BO 2873 | Ballrace (BS292 - BAL008) | 33 | DL |
| BO 2874 | Ballrace | 45 | CJ |
| BO 2878/2 | Resistor | 57 | AE |
| BO 2878/4 | Resistor | 79 | M |
| BO 2917/1 | Operation Counter | 81 | M |
| BO 2932A | Fuse Carrier | 19 | BW*CM* |
| | | 23 | *BW*CM |
| BO 3045 | Capacitor | 79 | K |
| BO 3548/18 | Resistor | 79 | N |
| BO 3549/8 | Resistor | 23 | CL |
| BO 3564/2 | Microswitch Operating Attachment CP | 85 | AN |
| BO 3804 | Neon Indicator Lamp | 53 | X |
| BO 3805/1 | Lamp Holder (S.B.C.) | 53 | L |
| BO 3806/5 | Signal Lamp Lens | 95 | C |
| BO 3811/1 | 12 Way Panel Mounting Plug | 17 | AP |
| | | 21 | AP |
| BO 3815/7 | Resistor | 17 | AG |
| | | *21** | *AG* |
| BO 3816/1 | Plug 3 Way | 17 | AN |
| | | 21 | AN |
| BO 3851/1 | Oil Impregnated Bush | 43 | H |
| BO 3852/1 | Oil Impregnated Bush | 43 | F |
| BO 3853A | Ball Thrust Bearing | 43 | M |
| BO 3854/2 | Ball Thrust Bearing | 45 | CM |
| BO 3871/2 | Magnet Coil | 29 | F |
| BO 3871/3 | Magnet Coil | 29 | F |
| BO 3993/2 | Microswitch | 53 | C |
| BO 4040/1 | Spring Ball Catch | 85 | AD |
| BO 4046/2 | Fuse, 0.7 amp. | 19 | BX |
| | | *23** | *BX* |
| BO 4046/3 | Fuse, 1.5 amp. | 19 | BX |
| | | *23** | *BX* |
| BO 4046/4 | Fuse, 1.0 amp. | 19 | BX *CN* |
| | | 23 | CN *BX* |
| BO 4046/5 | Fuse, 2.5 amp. | *19** | *CN* |
| | | 23 | CN |

| Part No. | Part Name | Page | Index Letters |
|---|---|---|---|
| BO 4063A/2 | Cable Clip | 9 | T |
| | | *11** | *T* |
| BO 4063/4 | Cable Clip | 61 | Y |
| BO 4063A/5 | Cable Clip | 9 | T |
| | | *11** | *T* |
| | | 19 | CU |
| | | 23 | CU |
| BO 4078/1 | Rubber Bush | 61 | AF |
| BO 4092/5 | Capacitor | *19** | *CD* |
| | | 23 | CD |
| BO 4092/6 | Capacitor | *19** | *CD* |
| | | 23 | CD |
| BO 4092/7 | Capacitor | *19** | *CD* |
| | | 23 | CD |
| BO 4122/1 | Capacitor | *19** | *CH* |
| | | 23 | CH |
| BO 4122/3 | Capacitor | *19** | *CH* |
| | | 23 | CH |
| BO 4148 | Capacitor | 19 | BQ |
| | | *23** | *BQ* |
| BO 5201/11 | Capacitor | 19 | BK |
| | | 23 | BK |
| BO 5587 | Suppressor | 19 | BT |
| | | *23** | *BT* |
| BO 7601/2 | Side Entry Cover | 57 | AM |
| BO 7601/3 | 4-Way Socket | 19 | BP |
| | | 23 | CC |
| BO 7601/8 | Side Entry Cover | 57 | AN |
| | | 61 | AE |
| BO 7605/3 | 12-Way Plug | 27 | B |
| BO 7605/4 | 12-Way Socket | 27 | K |
| BO 7605/9 | 12-Way Top Entry Cover | 27 | C |
| BO 7605/10 | 12-Way Side Entry Cover | 27 | F |
| BO 7733/1 | 18-Way Plug | 77 | G |
| BO 7733/2 | 18-Way Socket | 17 | AJ |
| | | 21 | AJ |
| BO 7733/7 | Socket Cover | 17 | AK |
| | | 21 | AK |
| BO 7800/4 | Grommet | 17 | AL |
| | | 21 | AL |
| BO 8000/3 | Drawer Handle | 85 | AH |
| BO 8255/1 | Spire Clip | 61 | AB |
| BO 8310/1 | Latch Spring | 87 | CL |
| | | *89** | *CL* |
| | | *91** | *CL* |
| BO 8310/2 | Stud | 87 | CO |
| | | *89** | *CO* |
| | | *91** | *CO* |
| BO 8403/1 | Journal Bearing | 57 | E |
| | | 61 | O |
| BO 8581/2 | Ball Bearing | 67 | M |

CB NUMBERS (CONNEXION BLOCKS)

| | | | |
|---|---|---|---|
| CB1028 | Connecting Block (4 Section) | 57 | AA |
| CB1143 | 3-Way Terminal Block | 53 | K |
| CB1151 | Terminal Strip (6-Way) | 19 | CB CR |
| | | 23 | CB CR |
| CB1152 | Terminal Strip (10-Way) | 19 | CA CQ |
| | | 23 | CA CQ |

| Part No. | Part Name | Page | Index Letters |
|---|---|---|---|
| CD NUMBERS (CORDS) | | | |
| CD1646 | 3-Way Socket and Power Cord Assembly | 27 | M |
| CD1647 | 3-Way Plug and Socket | 27 | L |
| CD1648 | 12-Way Socket Signal Cord Assembly | 27 | D |
| CD1649 | 12-Way Plug and Socket Signal Cord Assembly | 27 | E |
| CD1710 | 12-Way Plug and Socket Signal Cord Assembly | 27 | J |
| CD1715 | 12-Way Plug and Socket Signal Cord Assembly | 27 | A |
| CD1816 | 12-Way Socket and Signal Cord Assembly | 27 | H |
| CD1817 | 12-Way Plug and Socket Signal Cord Assembly | 27 | G |
| CD1818 | 3-Way Socket and Power Cord Assembly | 27 | O |
| CD1819 | 3-Way Plug and Power Cord Assembly | 27 | N |
| CF NUMBERS (CABLEFORMS) | | | |
| CF1919 | Cableform | 53 | F |
| CF2177 | Inductor CP | 57 | S |
| CF2259 | Cableform CP | 9 | D |
| | | 11 | D |
| CF2260 | Cableform CP | 53 | D |
| CS NUMBERS (SET COLLARS AND SCREWS) | | | |
| CS1011 | Set Collar and Screw | *87** | *AL* |
| | | *89** | *AL* |
| | | 91 | AL |
| CS1015 | Set Collar and Screw | 55 | AG |
| CS1016 | Set Collar and Screw | 13 | BK |
| CS1021 | Set Collar and Screw | 71 | EY |
| | | 87 | T |
| | | *89** | *T* |
| | | *91** | *T* |
| | | 93 | R |
| CS1030 | Set Collar and Screw | 43 | AV |
| CS1044 | Set Collar and Screw | 47 | EG |
| | | 73 | C |
| CS1057 | Set Collar and Screw | 39 | DF |
| CS1070 | Set Collar and Screw | 67 | AO |
| | | 69 | CF |
| CS1107 | Set Collar and Screw | 51 | CV |
| CT NUMBERS (CONNEXION TAGS) | | | |
| CT1026 | Contact Tag | 67 | BK |
| CT5133 | Connexion Tag | 19 | BZ CP |
| | | 23 | BZ CP |
| EC NUMBERS (ECCENTRIC SCREWS) | | | |
| EC1574 | Eccentric | 47 | DX |
| EC1576A | Eccentric | 37 | B |
| EC1577 | Eccentric | 37 | P |
| EC1578B | Eccentric | 39 | DQ |
| EC1579 | Eccentric | 39 | DP |

| Part No. | Part Name | Page | Index Letters |
|---|---|---|---|
| EC1581 | Eccentric | 7 | K |
| EC1590 | Eccentric | 83 | CD |
| EC1592 | Eccentric | 63 | BB |
| EC1593 | Eccentric Square | 31 | BB |
| EC1596 | Eccentric | 55 | BO |
| EC1624 | Eccentric | 83 | CT |
| EC1628 | Eccentric | 63 | AV |
| EC5040 | Eccentric | 83 | CK |
| EC5075 | Special Nut | 63 | BH |
| EC5076 | Eccentric | 51 | BB |
| EC5079 | Eccentric | 33 | EG |
| EC5088 | Eccentric Pin | 63 | AQ |
| EC5092 | Eccentric | 67 | BD |
| | | 93 | AT |
| EC5094 | Eccentric | *87** | *CF* |
| | | 89 | CF |
| | | *91** | *CF* |
| GR NUMBERS (GEARS) | | | |
| GR1035 | Spur Gear | 51 | Z |
| GR1036 | Spur Gear | 51 | AT |
| GR2198 | Motor Pinion | 49 | – |
| GR2199 | Motor Pinion | 49 | – |
| GR2201 | Motor Pinion | 49 | – |
| GR2202 | Traverse Drive Gear | 31 | BT |
| GR2207 | Motor Pinion | 49 | – |
| GR2208 | Motor Pinion | 49 | – |
| GR2221 | Motor Pinion | 49 | – |
| GR2223 | Motor Pinion | 49 | – |
| GR2224A | Motor Pinion | 49 | – |
| GR2225A | Motor Pinion | 49 | – |
| GR2228 | Motor Pinion | 49 | – |
| GR2229 | Motor Pinion | 49 | – |
| GR2230 | Motor Pinion | 49 | – |
| GR2237 | Motor Pinion | 49 | – |
| GR2238 | Motor Pinion | 49 | – |
| GR2261 | Motor Pinion | 49 | – |
| GR2262 | Motor Pinion | 49 | – |
| GR2263 | Motor Pinion | 49 | – |
| GR2264 | Motor Pinion | 49 | – |
| GR2267 | Motor Pinion | 49 | – |
| GR2268 | Motor Pinion | 49 | – |
| GR2269 | Motor Pinion | 49 | – |
| GR2270 | Motor Pinion | 49 | – |
| GR2271 | Motor Pinion | 49 | – |
| GR2272 | Motor Pinion | 49 | – |
| GR2273 | Motor Pinnion | 49 | – |
| GR4061 | Worm | 43 | K |
| GR5004 | Bevel Gear | 51 | AR |
| GR5005 | Bevel Gear | 51 | AS |
| KB NUMBERS (KEY BUTTONS) | | | |
| KB1006 | Key Button | 83 | CR |
| | | 95 | J |

| Part No. | Part Name | Page | Index Letters |
|---|---|---|---|
| **KN NUMBERS (KNOBS)** | | | |
| KN1032 | Feed Wheel Knob | 83 | BC |
| KN1034A | Knob | 83 | CA |
| KN1038 | Knob | *87** | *AP* |
| | | *89** | *AP* |
| | | 91 | AP |
| **KY NUMBERS (KEYS)** | | | |
| KY1040A | Key | 33 | DJ |
| KY1042A | Key | 31 | BU |
| KY1047 | Key | 31 | CN |
| KY1048 | Key | 33 | DF |
| KY1049 | Key | 33 | EJ |
| KY1077 | Key | 31 | BO |
| **PB NUMBERS (BUSHES)** | | | |
| PB2108 | Shouldered Bush | 43 | Z |
| PB4396B | Bush | 63 | BV |
| PB4403 | Spacing Collar | 17 | K |
| | | 21 | K |
| PB4405 | Shouldered Bush | 35 | BU |
| | | 37 | BR |
| PB4440 | Shouldered Bush | 47 | EB |
| PB4450 | Spacing Collar | 47 | DA |
| PB4451A | Collar | 43 | N |
| PB4453 | Shouldered Bush | 43 | AP |
| PB4454 | Spacing Collar | 47 | DT |
| PB4459 | Collar | 45 | BG |
| PB4470 | Trip Frame Spacing Collar | 73 | E |
| PB4471 | Selector Frames Spacing Collar | 73 | L |
| PB4489A | Bush | 31 | E |
| PB4490A | Bush | 33 | DG |
| PB4496B | Bush | 31 | BN |
| PB4499 | Bush | 31 | F |
| | | 57 | AH |
| PB4500 | Bush | 31 | BQ |
| PB4503 | Bush | 31 | BW |
| PB4511 | Flanged Bush | 51 | X |
| PB4514 | Bush | 51 | AK |
| PB4515 | Collar | 51 | W |
| PB4516 | Collar | 51 | Y |
| PB4523A | Spacing Collar | 51 | AV |
| PB4524 | Collar | 51 | BA |
| PB4556A | Collar | 67 | BS |
| PB4557A | Collar | 67 | BV |
| PB4558A | Shouldered Bush | 71 | DQ |
| PB4578 | Bush | 35 | BH |
| PB4579 | Bush | 35 | BN |
| PB4583 | Bush | 35 | CN |
| PB4632 | Collar | 75 | AJ |
| PB4655 | Collar | 39 | DZ |
| PB4656 | Spacer | 35 | BZ |
| | | 37 | BS |
| PB4686 | Collar | 45 | CH |
| PB4687 | Spacing Collar | 45 | CG |
| PB4731 | Hexagon Bush | 31 | AW |
| PB4732 | Rocker Arm Bearing Bush | 31 | AX |
| PB4736 | Spacing Collar | 39 | DZ |
| PB4764 | Bush | *19** | *CJ* |
| | | 23 | CJ |
| PB4902 | Spacer | 67 | BL |
| | | *87** | *CD* |
| | | 89 | CD |
| | | *91** | *CD* |
| PB4903 | Spacer (Long) | *87** | *CB* |
| | | 89 | CB |
| | | *91** | *CB* |
| PB4913 | Spacing Bush | *87** | *BM* |
| | | 89 | BM |
| | | *91** | *BM* |
| PB4916 | Special Bush | 85 | L |
| PB4971 | Special Bush | 85 | L |
| PB5011 | Bush | 55 | BT |
| PB5046 | Collar | 33 | EA |
| PB5056 | Collar | 45 | CC |
| PB5093 | Bush | 81 | Q |
| **PE NUMBERS (INSULATORS)** | | | |
| PE1007A | Insulator | 77 | Q |
| PE1078 | Grommet | 57 | T |
| PE1225 | Insulating Collet | 59 | D |
| PE2008 | Insulating Bush | 79 | C |
| PE5004A | Insulator | 77 | M |
| PE5117 | Spacing Block | 77 | K |
| PE5121 | Insulator | 59 | E |
| PE5122 | Insulator | 59 | F |
| PE5127 | Insulating Strip | 19 | BR |
| | | *23** | *BR* |
| **PF NUMBERS (LUBRICATORS)** | | | |
| PF1098 | Felt Lubricator | 71 | EA |
| PF1107 | Lubrication Washer | 15 | T |
| | | 17 | G |
| | | 21 | G |
| PF1108 | Lubricating Felt | 15 | Z |
| | | 17 | Q |
| | | 21 | Q |
| PF1113 | Lubricating Washer | 35 | BW |
| | | 37 | BP |
| PF1114 | Lubricating Washer | 15 | R |
| | | 37 | AV |
| PF1115 | Lubricating Washer | 13 | BP |
| | | 15 | H AD |
| | | 17 | M |
| | | 21 | M |
| | | 55 | BF |
| | | 65 | CV |
| PF1116 | Lubricating Washer | 15 | G |
| | | 19 | BC |
| | | 23 | BC |
| | | 37 | BW |
| | | 37 | CA |
| PF1124 | Lubrication Plug | 31 | AS |
| PF1125 | Lubrication Washer | 31 | AE |
| PF1126 | Lubrication Washer | 67 | BF |
| | | 93 | AV |
| PF1127 | Lubricating Washer | 51 | H |
| PF1128 | Lubricating Washer | 9 | M |
| | | *11** | *M* |
| | | 51 | CS |
| PF1130 | Lubricating Pad | 51 | O |
| PF1131 | Lubricating Strip | 51 | AJ |
| PF1133 | Lubricating Washer | 51 | AD |
| PF1134 | Lubricating Washer | 65 | CY |
| PF1136 | Lubrication Plug | 31 | Q |
| PF1138 | Lubricating Washer | 37 | V |
| PF1139 | Lubricating Washer | 37 | AY |
| PF1140 | Lubricating Washer | 35 | AX |
| PF1141 | Lubricating Pad | 37 | T |
| PF1142 | Lubricating Washer | 37 | BE |
| | | 39 | DG |
| | | 51 | AB |
| PF1143 | Lubricating Washer | 37 | M |
| PF1155 | Lubricating Washer | 19 | BA |
| | | 23 | BA |
| PF1162 | Lubrication Plug | 31 | BD |
| PF1173 | Felt Oiling Strip | 55 | J |
| PF1174 | Lubricating Washer | 51 | CP |
| PF1201 | Lubricating Washer | *9** | *BB* |
| | | 11 | BB |
| PF1206 | Spring Damper | 15 | P |
| **PG NUMBERS (SPRINGS)** | | | |
| PG1503 | Carriage Spring | 53 | Q |
| PG2123 | Stripper Lift Spring | 83 | BS |
| PG2129 | Shift Lock Bias Spring | 71 | FP |
| PG2133 | Leaf Spring | 63 | AT |
| PG2139 | Control Spring | 83 | BV |
| PG2163 | Backing Spring | 87 | D |
| | | *89** | *D* |
| | | *91** | *D* |
| PG2165 | Spring | 83 | AM |
| PG3166A | Special Spring | 63 | BY |
| PG3167C | Feed Pawl Spring | 55 | AB |
| PG3168B | Retention Pawl Spring | 55 | AE |
| PG3169 | Feed Lever Spring | 55 | AC |
| PG3174 | Line Feed Return Spring | 31 | J |
| PG3175 | Torsion Spring | 51 | CF |
| PG3176 | Torsion Spring | 51 | BC |
| PG3184 | Special Spring | 35 | CR |
| PG3185 | Special Spring | 71 | DG |
| PG3186 | Special Spring | 71 | DU |
| PG3188 | Special Spring | 67 | BR |
| PG3189 | Special Spring | 67 | BU |
| PG3192B | Torsion Spring | 35 | BR |
| PG3193 | Torsion Spring | 35 | BE |
| PG3194 | Torsion Spring | 35 | BG |
| PG3196 | Special Spring | 35 | CU |
| PG3197A | Torsion Spring | 39 | EA |
| PG3198A | Torsion Spring | 39 | CO |
| PG3199B | Torsion Spring | 37 | AG |
| PG3200B | Torsion Spring | 37 | AO |
| | | 37 | BH |

| Part No. | Part Name | Page | Index Letters |
|---|---|---|---|
| PG3204 | Torsion Spring | 29 | P |
| PG3213 | Torsion Spring | 39 | EU |
| PG3214 | Torsion Spring | 39 | EQ |
| PG3220 | Tension Spring | 39 | DU |
| PG3223 | Special Spring | 35 | E |
| PG3224 | Torsion Spring | 85 | AB |
| PG3225 | Torsion Spring | 85 | Y |
| PG3227 | Torsion Spring | 39 | CT |
| PG3229 | Special Spring | 63 | CA |
| PG3230 | Special Spring | 63 | J |
| PG3232 | Special Spring | 71 | DR |
| PG3235 | Torsion Spring | 55 | BQ |
| PG3236 | Torsion Spring | 55 | BR |
| PG3237 | Torsion Spring | 65 | CU |
| PG3278 | Special Spring | 75 | AO |
| PG3279 | Latch Trip Lever Spring | 75 | AR |
| PG3299 | Torsion Spring | *87** | *BX* |
| | | 89 | BX |
| | | *91** | *BX* |
| PG3300A | Torsion Spring | *87** | *AU* |
| | | *89** | *AU* |
| | | 91 | AU |
| PG3301 | Torsion Spring | *87** | *CA* |
| | | 89 | CA |
| | | *91** | *CA* |
| PG3302 | Torsion Spring | 71 | ET |
| | | 93 | M |
| PG3303A | Torsion Spring | 71 | EW |
| | | 93 | P |
| PG3304 | Torsion Spring | 83 | CQ |
| PG3307 | Torsion Spring | 67 | AX |
| | | 93 | AN |
| PG3311 | Torsion Spring | *87** | *BJ* |
| | | *89** | *BJ* |
| | | 91 | BJ |
| PG3312 | Torsion Spring | *87** | *AG* |
| | | *89** | *AG* |
| | | 91 | AG |
| PG3313B | Tape Gate Spring | 87 | E |
| | | *89** | *E* |
| | | *91** | *E* |
| PG3317A | Return Spring | 53 | H |
| PG3318A | Special Spring | 47 | EP |
| PG3322 | Torsion Spring | 47 | ES |
| PG3323 | Special Spring | 67 | BM |
| PG3324 | Special Spring | *9** | *AY* |
| | | 11 | AY |
| PG5112 | Change Over Bias Spring | 55 | AN |
| PG5113 | Compression Spring | 45 | BJ |
| PG5114 | Compression Spring | 43 | AA |
| PG5115 | Compression Spring | 47 | EC |
| PG5117 | Compression Spring | 51 | BE |
| PG5146 | Compression Spring | 83 | Z |
| PG5149 | Compression Spring | 43 | AQ |
| PG5152 | Compression Spring | 31 | BC |
| PG5155 | Compression Spring | 39 | CY |
| PG5157 | Compression Spring | 55 | S |
| | | 9 | L |
| PG5159 | Compression Spring | *11** | *L* |
| | | 51 | CU |
| PG5161 | Spring | 61 | G |
| | | *87** | *CJ* |
| PG7029 | Tension Spring | 89 | CJ |
| | | *91** | *CJ* |
| PG7066 | Tension Spring | 41 | AC |
| PG7077 | Tension Spring | 71 | FL |
| | | 93 | Z |
| PG7078 | Tension Spring | 83 | BP |
| PG7100 | Tension Spring | 37 | CJ |
| | | *87** | *BL* |
| PG7101 | Tension Spring | *89** | *BL* |
| | | 91 | BL |
| | | *87** | *BT* |
| PG7145A | Tension Spring | 89 | BT |
| | | *91** | *BT* |
| PG7176 | Tension Spring | 83 | CW |
| PG7197 | Tension Spring | 65 | CW |
| PG7387 | Tension Spring | 37 | CE |
| PG7388A | Tension Spring | 83 | BG |
| PG7438 | Tension Spring | 63 | BM |
| | | 63 | CJ |
| PG7442 | Tension Spring | *87** | *CE* |
| | | 89 | CE |
| | | *91** | *CE* |
| PG7444 | Tension Spring | 47 | DQ |
| PG7445 | Tension Spring | 47 | DR |
| PG7446A | Tension Spring | 45 | CY |
| PG7447 | Tension Spring | 45 | CQ |
| PG7448 | Tension Spring | 47 | DW |
| PG7449 | Selector Frames Spring | 73 | M |
| PG7450 | Tension Spring | 73 | Q |
| PG7452 | Tension Spring | 51 | P |
| PG7454B | Tension Spring | 51 | BV |
| PG7456 | Tension Spring | 37 | AZ |
| PG7466C | Tension Spring | 41 | L |
| PG7467A | Tension Spring | 41 | X |
| PG7468C | Tension Spring | 41 | H |
| PG7470 | Tension Spring | 67 | Z |
| PG7471 | Tension Spring | 71 | DN |
| PG7472 | Tension Spring | 71 | FK |
| | | 93 | Y |
| PG7474 | Tension Spring | 35 | BP |
| PG7475A | Tension Spring | 35 | CH |
| PG7476 | Tension Spring | 35 | CG |
| | | 39 | EK |
| PG7477 | Tension Spring | 35 | BK |
| PG7478 | Tension Spring | 35 | N |
| PG7479 | Tension Spring | 35 | R |
| PG7480 | Tension Spring | 39 | DX |
| PG7481A | Tension Spring | 31 | T |
| PG7483 | Tension Spring | 39 | CR |
| PG7484 | Tension Spring | 35 | BA |
| PG7488 | Tension Spring | 47 | EK |
| | | 55 | BH |
| PG7493A | Tension Spring | 15 | Q |
| PG7496 | Tension Spring | 15 | N |
| PG7497A | Tension Spring | 7 | L |
| PG7512 | Tension Spring | 39 | EV |
| PG7513 | Tension Spring | 95 | H |
| PG7514A | Tension Spring | 51 | CB |
| PG7521 | Tension Spring | 83 | J |
| PG7523 | Tension Spring | 67 | AR |
| | | 69 | CO |
| PG7525A | Tension Spring | 83 | CE |
| PG7526B | Tension Spring | 83 | CF |
| PG7527 | Tension Spring | 83 | AL |
| PG7528 | Tension Spring | 83 | AQ |
| PG7529 | Tension Spring | 33 | EL |
| PG7531 | Tension Spring | 81 | K |
| PG7532 | Tension Spring | 81 | L |
| PG7534 | Tension Spring | 63 | AY |
| PG7536 | Tension Spring | 39 | DC |
| PG7537 | Spring | 63 | BU |
| PG7538 | Tension Spring | 63 | AW |
| PG7539A | Spring | 63 | BT |
| PG7540 | Tension Spring | 63 | AH |
| PG7541 | Tension Spring | 15 | O |
| PG7542A | Tension Spring | 15 | AB |
| PG7543 | Tension Spring | 35 | CH |
| PG7545 | Tension Spring | 29 | T |
| PG7548 | Damper Spring | 63 | BQ |
| PG7551 | Tension Spring | 43 | AX |
| PG7552A | Tension Spring | 41 | N |
| PG7557 | Tension Spring | 41 | P |
| PG7558 | Tension Spring | 69 | CS |
| PG7562 | Tension Spring | *9** | *AE* |
| | | 11 | AE |
| PG7578 | Dashpot Return Spring | 25 | DM |
| PG7592A | Tension Spring | 31 | BH |
| PG7615 | Lag Disk Spring | 75 | J |
| PG7616 | Tension Spring | 75 | AU |
| PG7617 | Tension Spring | 75 | BB |
| PG7618 | Tension Spring | 75 | AL |
| PG7619 | Tension Spring | 75 | AC |
| PG7624 | Tension Spring | 71 | FM |
| | | 93 | AZ |
| PG7636 | Tension Spring | 13 | BY |
| PG7638 | Tension Spring | 87 | AD |
| | | *89** | *AD* |
| | | *91** | *AD* |
| PG7639 | Tension Spring | 31 | AH |
| | | 87 | AB |
| | | *89** | *AB* |
| | | *91** | *AB* |
| PG7644 | Tension Spring | 87 | BK |
| | | *89** | *BK* |
| | | *91** | *BK* |
| PG7661A | Tension Spring | 71 | FK |
| PG7666 | Peckers Spring (Long) | 87 | Q |
| | | *89** | *Q* |
| | | *91** | *Q* |
| PG7667 | Peckers Spring (Short) | 87 | P |
| | | *89** | *P* |
| | | *91** | *P* |

| Part No. | Part Name | Page | Index Letters |
|---|---|---|---|
| PG7668 | Tape Out Spring .. .. .. .. | 87 | S |
| | | *89** | *S* |
| | | *91** | *S* |
| PG7669 | Tension Spring .. .. .. .. | 83 | CM |
| PG7672 | Tension Spring .. .. .. .. | 45 | CF |
| PG7673 | Tension Spring .. .. .. .. | 9 | R |
| | | *11** | *R* |
| PG7674 | Tension Spring .. .. .. .. | 33 | EC |
| PG7679 | Tension Spring .. .. .. .. | 75 | AX |
| **PK NUMBERS (CLEATS)** | | | |
| PK1120 | Clip .. .. .. .. .. .. | *19** | *CK* |
| | | 23 | CK |
| PK1153 | Clip .. .. .. .. .. .. | 57 | AG |
| PK1159 | Cable Clip .. .. .. .. | *9** | *E* |
| | | 11 | E |
| PK1169 | Cable Clip .. .. .. .. | 9 | U |
| | | *11** | *U* |
| PK1170 | Cable Clip .. .. .. .. | 57 | AO |
| PK1202 | Inductor Clip .. .. .. .. | 57 | AL |
| PK1203 | Capacitor Clip .. .. .. .. | *19** | *CG* |
| | | 23 | CG |
| PK2029 | Cable Clip .. .. .. .. | 57 | AK |
| PK2036 | Capacitor Strap .. .. .. | 19 | BS |
| | | *23** | *BS* |
| PK2063 | Clamp .. .. .. .. .. | 19 | BL |
| | | 23 | BL |
| **PN NUMBERS (NUTS)** | | | |
| PN5038 | Special Nut .. .. .. .. | 83 | BD |
| PN5096 | Special Nut .. .. .. .. | 43 | AN |
| PN5099 | Special Nut .. .. .. .. | 51 | AA |
| PN5100 | Special Nut .. .. .. .. | 51 | AN |
| PN5101 | Special Hexagonal Nut .. .. | 71 | DL |
| PN5102 | Special Nut .. .. .. .. | 35 | CE |
| PN5106 | Special Nut .. .. .. .. | 83 | BY |
| PN5107 | Special Nut .. .. .. .. | 83 | BO |
| PN5108 | Special Nut .. .. .. .. | 43 | BD |
| PN5136 | Special Nut .. .. .. .. | 75 | U |
| PN5138 | Special Nut .. .. .. .. | 87 | G |
| | | *89** | *G* |
| | | *91** | *G* |
| PN5139 | Special Nut .. .. .. .. | 45 | BV |
| PN5140 | Special Nut .. .. .. .. | 31 | AN |
| PN6026 | Special Nut .. .. .. .. | 65 | CR |
| PN6030B | Special Nut .. .. .. .. | 63 | BG |
| PN6037 | Special End Nut .. .. .. | 55 | U |
| PN6038 | Special Nut .. .. .. .. | 55 | T |
| PN7019 | Special Square Nut .. .. .. | 43 | O |
| **PP NUMBERS (PINS)** | | | |
| PP1097 | Parallel Pin .. .. .. .. | 55 | Z |
| PP2042 | Parallel Pin .. .. .. .. | 31 | BG |
| PP5588 | Threaded Pin .. .. .. .. | 35 | AG |
| PP5589 | Threaded Pin .. .. .. .. | 35 | AH |
| PP5596 | Threaded Pin .. .. .. .. | 37 | AS |
| PP5597 | Threaded Pin .. .. .. .. | 17 | AB |
| | | 21 | AB |
| PP5598 | Threaded Pin .. .. .. .. | 17 | AE |
| | | *21** | *AE* |
| PP5600 | Threaded Pin .. .. .. .. | 9 | AL |
| | | *11** | *AL* |
| PP5612 | Tape Pin .. .. .. .. .. | 85 | AJ |
| PP5615 | Rocker Arm Pivot .. .. .. | 31 | AV |
| PP5616 | Anchor Pin .. .. .. .. | 31 | BA |
| PP5656 | Threaded Pin .. .. .. .. | 67 | AW |
| | | 93 | AM |
| PP5657 | Spring Anchor .. .. .. .. | *87** | *BD* |
| | | *89** | *BD* |
| | | 91 | BD |
| PP5658 | Pecker Pivot .. .. .. .. | 87 | F |
| | | *89** | *F* |
| | | *91** | *F* |
| PP5659 | Feed Arm Pivot .. .. .. .. | *87** | *BU* |
| | | 89 | BU |
| | | *91** | *BU* |
| PP5660 | Pivot Pin .. .. .. .. | *87** | *CG* |
| | | 89 | CG |
| | | *91** | *GG* |
| PP5661 | Retention Roller Pivot .. .. | *87** | *BR* |
| | | 89 | BR |
| | | *91** | *BR* |
| PP5662 | Pivot Pin .. .. .. .. | 87 | Z |
| | | *89** | *Z* |
| | | *91** | *Z* |
| PP5663 | Latch Pin .. .. .. .. | *87** | *AJ* |
| | | *89** | *AJ* |
| | | 91 | AJ |
| PP5664 | Spring Anchor .. .. .. .. | 13 | BR |
| PP5665 | Retention Lever Pivot .. .. | *87** | *BP* |
| | | 89 | BP |
| | | *91** | *BP* |
| PP6218 | Spring Anchor Pin .. .. .. | 73 | R |
| PP6277 | Spring Anchor Pin .. .. .. | 63 | AZ |
| PP6289 | Special Anchor Pin .. .. .. | 29 | M |
| PP6317 | Pivot Pin .. .. .. .. .. | 61 | H |
| PP6809 | Special Parallel Pin .. .. | 83 | BA |
| PP6826 | Starter Spindle .. .. .. | 43 | AJ |
| PP6828 | Special Parallel Pin .. .. | 31 | D |
| PP6836 | Special Parallel Pin .. .. | 37 | BV |
| | | 37 | BZ |
| PP6840 | Parallel Pin .. .. .. .. | 19 | BB |
| | | 23 | BB |
| PP6841 | Special Parallel Pin .. .. | *9** | *Y* |
| | | 11 | Y |
| PP6842 | Special Parallel Pin .. .. | 9 | AO |
| | | *11** | *AO* |
| PP6843 | Special Parallel Pin .. .. | 9 | AM |
| | | *11** | *AM* |
| PP6857 | Damper Spindle .. .. .. | 63 | BP |
| PP6859 | Bellcrank Pivot .. .. .. | 71 | EB |
| PP6912 | Special Parallel Pin .. .. | 67 | BB |
| | | 93 | AR |
| PP6913 | Special Parallel Pin .. .. | 67 | AY |
| | | 93 | AO |
| PP6914 | Link Pivot Pin .. .. .. | 71 | EX |
| | | 93 | Q |
| PP7947 | Shouldered Pin .. .. .. | 37 | BC |
| PP7950 | Shouldered Pin .. .. .. | 47 | EF |
| PP7970 | Shouldered Pin .. .. .. | 35 | AT |
| PP7981 | Shouldered Pillar .. .. .. | 77 | U |
| PP7996 | Roller Pivot .. .. .. | 31 | AZ |
| PP8010 | Roller Pivot Pin .. .. .. | 25 | DL |
| PP8101 | Pivot Pin .. .. .. .. | 71 | EU |
| | | 93 | N |
| PP8949 | Flanged Pin .. .. .. .. | 63 | BL |
| PP8962 | Flanged Pin .. .. .. .. | 47 | DL |
| PP9120 | Flanged Pin .. .. .. .. | 41 | AE |
| PP9162 | Flanged Pin .. .. .. .. | 85 | D |
| PP9183 | Flanged Pin .. .. .. .. | 39 | ES |
| PP9184 | Flanged Pin .. .. .. .. | 39 | EO |
| PP9185A | Flanged Pin .. .. .. .. | 51 | CX |
| PP9198 | Flanged Pin .. .. .. .. | 83 | AD |
| PP9201 | Flanged Pin .. .. .. .. | 35 | CP |
| PP9277 | Suppressor Link Clamping Screw .. | 75 | AD |
| PP9299 | Pillar .. .. .. .. .. | 87 | CM |
| | | *89** | *CM* |
| | | *91** | *CM* |
| PP9300 | Pillar .. .. .. .. .. | 87 | – |
| | | 89 | – |
| | | 91 | – |
| PP9301 | Pillar .. .. .. .. .. | 87 | CN |
| | | *89** | *CN* |
| | | *91** | *CN* |
| PP9331A | Special Pin .. .. .. .. | 47 | EO |
| **PS NUMBERS (SCREWS)** | | | |
| PS2205 | Screw 6BA .. .. .. .. | 51 | C |
| PS2141 | Screw 6BA .. .. .. .. | 51 | C |
| PS2237 | Screw 6BA .. .. .. .. | 51 | C |
| PS5032 | Special Screw .. .. .. .. | 57 | Z |
| | | 61 | AC |
| PS5122 | Special Screw .. .. .. .. | 35 | BY |
| PS5124 | Special Screw .. .. .. .. | 47 | DN |
| PS5125 | Special Screw .. .. .. .. | 45 | BF |
| PS5126 | Special Screw .. .. .. .. | 45 | CX |
| PS5127 | Special Screw .. .. .. .. | 73 | P |
| PS5129 | Special Screw .. .. .. .. | 51 | CD |
| PS5132 | Special Screw .. .. .. .. | 35 | Q |
| | | 67 | AN |
| | | 69 | CG |
| PS5134 | Special Screw .. .. .. .. | 19 | BD |
| | | 23 | BD |
| PS5135 | Special Screw .. .. .. .. | *9** | *AD* |
| | | 11 | AD |
| PS5136 | Special Screw .. .. .. .. | 31 | U |
| PS5138 | Pivot Screw .. .. .. .. | 83 | BR |
| PS5145 | Special Screw .. .. .. .. | 37 | K |
| PS5152 | Special Screw .. .. .. .. | 37 | BM |
| PS5176 | Special Screw .. .. .. .. | 57 | P |
| PS5180 | Bolt Thin Headed ... .. .. | 51 | L |
| PS5182 | Special Screw .. .. .. .. | 43 | V |
| PS5183 | Special Screw .. .. .. .. | 45 | CA |
| PS5184 | Special Screw .. .. .. .. | 67 | BP |

| Part No. | Part Name | Page | Index Letters |
|---|---|---|---|
| PS5258 | Special Screw | 7 | – |
| | | 9 | – |
| | | 11 | – |
| PS5289 | Special Screw | 7 | F |
| | | 67 | AQ |
| | | 69 | CQ |
| | | 83 | DR |
| PS5392 | Special Screw | 45 | CT |
| PS5395 | Special Screw | 35 | AR |
| PS5396 | Special Screw | 37 | AF |
| | | 37 | AN |
| | | 37 | BG |
| PS5399 | Special Screw | 7 | – |
| PS5413 | Special Hexagon Head Screw | 51 | BM |
| PS5458 | Special Screw | 51 | B |
| PS5459 | Special Screw | 51 | B |
| PS5637 | Eccentric Screw | 83 | BN |
| PS5640 | Special Screw | 83 | BH |
| PS5647A | Special Screw | 63 | CH |
| PS5648 | Special Screw | 63 | CB |
| PS5649 | Special Screw | 63 | BF |
| PS5651 | Change Arm Pivot | 55 | AL |
| PS5654 | Special Screw | 47 | DP |
| PS5655 | Special Screw | 47 | DU |
| PS5656 | Shouldered Screw | 43 | AB |
| PS5659 | Shouldered Screw | 51 | CN |
| PS5660 | Special Screw | 51 | BR |
| PS5665 | Shouldered Screw | 71 | DM |
| PS5672 | Special Screw | 7 | – |
| | | 77 | T |
| PS5673 | Special Screw | 9 | AS |
| | | *11** | *AS* |
| | | 35 | AP |
| | | 73 | U |
| PS5674 | Shouldered Screw | 7 | – |
| PS5686 | Special Hexagon Head Screw | 67 | AP |
| | | 69 | CP |
| PS5687A | Shouldered Pin | 83 | DD |
| PS5692 | Shouldered Screw | 63 | T |
| PS5693 | Shouldered Screw | 51 | CZ |
| PS5696A | Shouldered Screw | 43 | BC |
| PS5697 | Shiftlock Bearing (RH) | 71 | EH |
| PS5924 | Special Screw | 57 | J |
| | | 61 | T |
| PS5927 | Cone Point Screw | 67 | G |
| | | 93 | AJ |
| PS6119 | Special Screw | 39 | DK |
| PS6121 | Special Screw | 83 | AR |
| PS6123 | Special Screw | 43 | AZ |
| | | 47 | EE |
| PS6146 | Special Screw | 55 | BS |
| PS6228 | Knurled Head Screw | 45 | BL |
| PS6517 | Upper Armature Pivot Screw | 29 | K |
| PS6518 | Lower Armature Pivot Screw | 29 | D |
| PS6525 | Link Screw | 25 | DN |
| PS6547 | Adjustment Screw | 75 | AB |
| PS6608 | Special Screw | 51 | B |
| PS7034 | Special Screw | 59 | F |
| PS7106 | Special Screw | 51 | AY |
| PS7107 | Special Screw | 51 | BK |
| PS7112 | Special Screw | 35 | CD |
| | | 39 | EE |
| | | 39 | EJ |
| PS7129 | Special Screw | 31 | Z |
| PS7174 | Control Rod | 83 | BW |
| PS7176 | Special Screw | *87** | *AQ* |
| | | *89** | *AQ* |
| | | 91 | AQ |
| PS7184 | Spring Drum Pivot | 53 | O |
| PS7238 | Special Screw | 19 | AT |
| | | 23 | AT |

PW NUMBERS (WASHERS)

| Part No. | Part Name | Page | Index Letters |
|---|---|---|---|
| PW5040 | Special Washer | 35 | CF |
| PW5053 | Special Washer | 51 | AC |
| PW5190 | Special Washer | 31 | V |
| | | 63 | AR |
| | | 67 | O |
| PW5226 | Special Washer | 63 | Z |
| | | 83 | AA |
| PW5232 | Shim | 31 | AF |
| PW5277 | Shim | 53 | V |
| PW5308 | Retaining Washer | 19 | CT |
| | | 23 | CT |
| PW5459 | Special Washer | 79 | E |
| PW5484 | Special Washer | 75 | E |
| PW5508 | Shim | 13 | BQ |
| | | 75 | AA |
| PW5529 | Spacing Washer | 51 | DA |
| PW5547 | Special Washer | 59 | E |
| PW5642 | Special Washer | 51 | G |
| | | 55 | C |
| | | 71 | DK |
| PW5645 | Thrust Washer | 39 | DE |
| PW5649 | Special Washer | 83 | BJ |
| | | 87 | H |
| | | *89** | *H* |
| | | *91** | *H* |
| PW5673 | Special Washer | 63 | CG |
| PW5674 | Special Washer | 35 | BX |
| | | 37 | BN |
| | | 55 | BL |
| PW5675 | Special Washer | 17 | F |
| | | 21 | F |
| PW5676A | Special Spring Washer | 55 | BA |
| PW5681 | Shim Washer | 19 | BE |
| | | 23 | BE |
| | | 35 | BV |
| | | 37 | BQ |
| | | 45 | CS |
| PW5682 | Special Washer | *9** | *BA* |
| | | 11 | BA |
| | | 45 | BK |
| | | 75 | AS |
| PW5687 | Special Washer | 31 | AO |
| PW5688 | Special Washer | 31 | H |
| PW5689 | Special Washer | 67 | BG |
| | | 93 | AW |
| PW5691 | Special Washer | 83 | DE |
| PW5692 | Special Washer | 51 | BZ |
| PW5693 | Special Washer | 9 | N |
| | | *11** | *N* |
| | | 35 | AY |
| | | 51 | CT |
| PW5694 | Washer | *9** | *AX* |
| | | 11 | AX |
| | | 51 | BD |
| | | 83 | CV |
| PW5695A | Special Washer | 51 | BF |
| PW5698 | Special Washer | 51 | AM |
| | | 75 | W |
| PW5699 | Shim Washer | 39 | CU |
| | | 51 | AQ |
| PW5701 | Special Washer | 35 | M |
| PW5702 | Special Washer | 37 | AW |
| PW5703 | Special Washer | 39 | DD |
| PW5705 | Special Washer | 31 | AD |
| | | 35 | AK |
| | | 71 | DS |
| PW5706 | Special Washer | 39 | DT |
| PW5707 | Special Washer | 37 | U |
| PW5708 | Special Washer | 37 | Q |
| PW5709 | Special Washer | 37 | BJ |
| PW5710 | Special Washer | 37 | BF |
| PW5711 | Special Washer | 65 | CX |
| PW5714 | Shim | 39 | CZ |
| | | 43 | W |
| PW5716 | Special Washer | 9 | – |
| | | 11 | – |
| | | 57 | AR |
| PW5719 | Special Washer | 19 | AU |
| | | 23 | AU |
| PW5720 | Special Washer | 29 | Q |
| PW5728A | Special Washer | 33 | CP |
| PW5729 | Shim | 71 | FJ |
| | | 93 | AA |
| PW5736 | Special Washer | 83 | AJ |
| PW5737 | Shim | 51 | BS |
| PW5738 | Special Washer | 45 | CK |
| PW5739 | Shim | 31 | BY |
| PW5741 | Special Washer | 33 | EE |
| PW5743 | Special Washer | 51 | BT |
| PW5745 | Spacer | 63 | BA |
| PW5746 | Special Washer | 17 | AF |
| | | *21** | *AF* |
| PW5754 | Special Washer | 31 | BV |
| | | 87 | W |
| | | *89** | *W* |
| | | *91** | *W* |
| PW5755 | Special Washer | 31 | AP |
| PW5759 | Shim | 51 | CY |
| | | 59 | K |
| PW5793 | Special Washer | 37 | AH |
| | | 37 | AP |
| PW5796 | Clamping Washer | 25 | DF |

| Part No. | Part Name | Page | Index Letters |
|---|---|---|---|
| PW5797 | Special Washer .. .. .. .. | 81 | E |
| PW5798 | Shim .. .. .. .. .. .. | 37 | AE |
| | | 37 | AM |
| PW5802 | Spool Damping Washer .. .. | 55 | P |
| PW5803 | Friction Washer .. .. .. | 55 | R |
| PW5805 | Special Washer .. .. .. .. | 25 | DD |
| PW5820 | Special Washer .. .. .. .. | 37 | BO |
| PW5843 | Special Washer .. .. .. .. | 39 | DA |
| PW5849 | Washer .. .. .. .. .. | 75 | V |
| PW5855 | Special Washer .. .. .. .. | 51 | BN |
| PW5861 | Spacer .. .. .. .. .. | 13 | BM |
| PW5870 | Special Washer .. .. .. .. | 33 | DM |
| PW5876 | Spacer .. .. .. .. .. | 45 | BY |
| PW5877 | Washer .. .. .. .. .. | 45 | BR |
| PW5879 | Special Washer .. .. .. .. | 31 | BL |
| PW5881 | Special Washer .. .. .. .. | 9 | – |
| | | 11 | – |
| | | 61 | AG |
| PW5882 | Shim .. .. .. .. .. .. | 45 | BP |
| PW5917 | Shim .. .. .. .. .. .. | 37 | N |

| Part No. | Part Name | Page | Index Letters |
|---|---|---|---|
| RB NUMBERS (RUBBER FEET) | | | |
| RB1020 | Rubber Foot .. .. .. .. | 19 | AS |
| | | 23 | AS |
| | | 85 | S |
| RL NUMBERS (ROLLERS) | | | |
| RL1169B | Ribbon Roller .. .. .. .. | 55 | AY |
| RL1179 | Roller .. .. .. .. .. | 51 | BQ |
| RL1180A | Roller .. .. .. .. .. | 51 | CO |
| RL1181 | Roller .. .. .. .. .. | 51 | CM |
| RL1183 | Roller .. .. .. .. .. | 9 | AP |
| | | *11** | *AP* |
| | | 67 | AZ |
| | | 71 | DV |
| | | 93 | AP |
| RL1185 | Roller .. .. .. .. .. | 67 | BE |
| | | 93 | AU |
| RL1186 | Roller .. .. .. .. .. | 35 | AL |
| | | 39 | EL |
| | | 65 | CZ |

| Part No. | Part Name | Page | Index Letters |
|---|---|---|---|
| RL1188 | Roller .. .. .. .. .. | 39 | CP |
| RL1190 | Roller .. .. .. .. .. | 9 | AQ |
| | | *11** | *AQ* |
| RL1209 | Cam Roller .. .. .. .. | 31 | AY |
| RL1212 | Roller .. .. .. .. .. | 31 | AA |
| RL1217 | Connecting Link Roller .. .. | 25 | DK |
| RL1242 | Lag Disk Roller .. .. .. | 75 | G |
| RL1246 | Carriage Return Tape Roller .. | 55 | D |
| RL1249 | Roller .. .. .. .. .. | 67 | BA |
| | | 93 | AQ |
| RL1250 | Roller (Long) .. .. .. .. | *87** | *AR* |
| | | *89** | *AR* |
| | | 91 | AR |
| RL1251 | Roller (Short) .. .. .. .. | *87** | *AS* |
| | | *89** | *AS* |
| | | 91 | AS |
| RL1252 | Retention Roller .. .. .. | *87** | *BS* |
| | | 89 | BS |
| | | *91** | *BS* |
| RL1261 | Roller .. .. .. .. .. | 31 | AM |

W.J.S

T.S.A. No. 97
*(Issued April 1961)*

creed

# Model PR Seventy-five Printing Reperforator

## PROVISIONAL ADJUSTMENT INSTRUCTIONS

*Creed & Company Limited*

TELEGRAPH HOUSE
CROYDON · ENGLAND

AN ICT ASSOCIATE

# INTRODUCTION

This addendum provides provisional adjustment instructions for the receiver-only version of the Model Seventy-five Printing Reperforator (which bears the designation 'Model PR Seventy-five'). The adjustment instructions for the keyboard and the transmitter can be found in the Creed Instruction Book No. 75 (July 1959 issue) and its associated supplements.

All references to 'left-hand' and 'right-hand' are based on the operator's view of the machine unless stated otherwise. The Translator Unit will therefore be on the right-hand side of the machine and the punch block and motor governor on the left-hand side.

The checks and adjustments which are given on the following pages should be carried out with the mechanism in the rest position, unless specifically stated otherwise. The 'rest position' can be defined as being when the selector and translator clutches are held against their detents by their respective retention rollers, when all the pins in the pin box have been set to the space position and when the run-out clutch (if fitted) is against its detent.

# MACHINE ADJUSTMENTS

1. Pecker Retention Arm (Figs. 1, 3 and 5)

(a) Horizontal Position

Check

1.1 Move the electromagnet to the 'spacing' position so that the clutch detent is released, and turn the machine by hand until trigger L, Fig.3, on the selector unit clutch, is clear of the detent A.

Check that there is a clearance of .005 - .010 in. (.13 - .25 mm.), i.e. dimension 'd', Fig.5, between the hook of retention arm A and the engagement face of lever E, when the lever is on one of the high points of its cam.

Action

1.2 If this is not so, slacken screws C (visible from the rear of the machine) until friction tight, and by means of the screwdriver slots B in the top of the bracket, move retention arm A until the correct clearance is present. Tighten screws C.

(b) Vertical Position

Check

1.3 Move the electromagnet armature to the 'marking' position, turn the machine by hand and check that lever E, Fig.5, passes over retention arm A with a clearance of .020 - .025 in. (.51 - .64 mm.).

Action

1.4 If adjustment is necessary, slacken rockshaft stop arm screw K, Fig.3, hold the electromagnet armature in the 'marking' position, slacken screws C, Fig.1, and position armature extension D until the correct clearance is achieved. Reposition rockshaft stop arm B, Fig.3, and tighten screws K and C.

2. Selector Unit Detent Clearance (Figs. 3 and 4)

Check

2.1 Slacken rockshaft stop arm screw K, Fig.3, and move the electromagnet armature to the 'spacing' position and check that there is a clearance of .005 - .010 in. (.13 - .25 mm.) i.e. dimension 'a' Fig.3 (Inset), between clutch trigger L and detent A. If this is so, reposition rockshaft stop arm B and tighten screw K.

Action

2.2 If necessary, slacken screw M, Fig.4 and, ensuring that the electromagnet armature remains at 'space', position detent A until dimension 'a', Fig.3, is set up. Tighten screw M, Fig.4. Reposition rockshaft stop arm B, Fig.3, and tighten screw K.

3. Camshaft Retainer (Figs. 3 and 4)

Check

3.1 Ensure that trigger L, Fig.4, is resting against the detent A and check that there is a clearance of .006 - .010 in. (.15 - .25 mm.), i.e. dimension 'c' (Inset), between the trigger L and backstop P.

Action

3.2 If this is not so, slacken capstan-headed clamp screw D, Fig.3, slightly, push the retaining lever C inwards so that the cam assembly moves clockwise (viewed from the front of the machine) and the backstop P, Fig.4 presses trigger L against detent A. Now gently move the cam assembly back until dimension 'c' is set up. Tighten screw D, Fig.3.

4. Rockshaft End Play (Figs. 3 and 4)

Check

4.1 Check that there is a maximum of .003 in. (.08 mm.) end play on rockshaft N, Fig.4 and, with the latter set to 'mark', check that the pin on rockshaft stop arm B, Fig.3, is touching the edge of the unit end plate.

Action

4.2 If necessary, slacken screw K until friction tight and position rockshaft stop arm B so that the correct end play is present. Then, with the rockshaft set to 'mark', and taking care not to upset the end play turn stop arm B on the shaft until the pin just touches the edge of the unit end plate. Tighten screw K.

5. Trip Operating Lever Stop (Fig.3)

Check

5.1 With the machine at rest, i.e. with the camshaft retainers on the selector and translator units engaged fully in their cams, check that trip operating lever G is against its stop and that there is a clearance of .003 - .010 in. (.08 - .25 mm.) i.e. dimension 'b', between the pin on trip link J and the bottom of the slot in bracket H.

Action

5.2 To adjust, slacken screws F until friction tight. Raise stop E as far as it will go. Pull trip link J forward against its guides and press down so that the pin on the link is at the bottom of the slot in bracket H. Maintaining this condition, measure the clearance between stop E and the surface of the unit base plate with a feeler gauge. Add a further .003 in. (.08 mm.) to the feeler gauge and re-insert between stop E and the base plate. With this increased dimension set up, tighten screws F. Dimension 'b' should now be present.

6. Translator Unit Trip (Figs. 3 and 7)

Check

6.1 Lift trip link J, Fig.3, so that it engages the detent operating lever P, Fig.7, and press the link down as far as it will go. Check that, with this condition set up, the translator clutch detent is clear of the clutch trigger by 1/64 in. (.4 mm.). (This clearance is similar to dimension 'a', Fig.3).

Action

6.2 Adjust by slackening capstan-headed screw Q, Fig.7, and positioning plate N. Tighten screw Q when the correct clearance is achieved.

7. Starter Trip from Electromagnet (Figs. 6 and 10)

Check

7.1 Disengage the pin on block B from wheel C, Fig.6, and depress starter beam J, Fig.10, down as far as it will go. Holding the beam in this position and with the electromagnet armature against the 'marking' stop, check that there is a clearance of no more than .006 in. (.15 mm.), i.e. dimension 'k', Fig.10, between rockshaft peg L and starter operating link O.

7.2 Move the electromagnet armature to the 'spacing' position and check that this action causes peg L to trip link O.

Action

7.3 If this is not so, slacken the two screws M and, with the armature in the 'marking' position, move bracket N by means of the screwdriver slots until the above conditions are satisfied. Tighten screws M.

8. Selector and Translator Unit Clutch Backstop (Fig.2A)

Check

8.1 Lift the selector clutch detent and turn the machine by hand until the clutch trigger mechanism is freely accessible. Insert a short 8BA screw (represented in

the figure by S) into the hole in the clutch frame R, and turn the screw until resistance is felt. (This is the 'pick-up' point, where toggles J are beginning to expand the clutch bands L).

8.2 Continue to turn screw S and check that both toggles J start to move simultaneously.

8.3 Check also that from the 'pick-up' point mentioned above, there is a clearance of .035 - .040 in. (.90 - 1.02 mm.) i.e. dimension 'ca', between the trigger H and the backstop.

8.4 Lift the translator clutch abutment and carry out checks 8.1 to 8.3 above with respect to the translator clutch. In this case the clearance between the trigger H and the backstop should be .040 - .045 in. (1.02 - 1.15 mm.). If no adjustment is required, remove the 8BA screw S.

Note: After removing screw S, check that there is at least .010 in. (.25 mm) free movement in both the selector and translator unit clutch triggers. If there is not, dimension 'ca' must be reduced until this condition is achieved.

Action

8.5 If adjustment is required, the following procedure should be adopted:-

(a) Slacken the locknuts of eccentric pivots K and turn the latter until toggles J are in their maximum outward position, i.e. clutch bands L are in full contact with the clutch drum.

(b) Slacken nut P. Turn screw Q anti-clockwise a turn or two, then clockwise until resistance is felt. (This is the point where clutch bands L are being pushed against the clutch drum). Now turn screw Q anti-clockwise 1/8 of a turn ($45^{o}$) so that the bands are just clear of the drum and clamp screw Q in this position with nut P.

(c) Insert a short 8BA screw (S in the figure) into the hole in frame R and turn the screw until trigger H is hard up against frame R. Now turn screw S 1¼ turns in an anti-clockwise direction.

(d) With the trigger thus positioned, turn eccentric pivots K (using the outer range of throw) until toggles J are 'bottomed' in the 'V's of the trigger H. Tighten the locknuts of pivots K. *Remove screw S.*

(e) If the two eccentric pivots K are seriously unbalanced i.e. one is at the limit of its adjustment, it may be necessary to remove clip M and re-orientate the eccentric trunnion block which is located on pivot N. If this should prove necessary, the adjustment procedure set out in sections (a), (b), (c) and (d) should be repeated with the trunnion block in its new position.

9. Starter Trip from Translator Clutch (Figs. 6 and 8)

Check

9.1 Lift the abutment on the translator unit clutch so that the clutch is tripped and allow the detent to rest on top of the trigger. In this condition there should be a gap of .005 - .010 in. (.13 - .25 mm.), i.e. dimension 'f', Fig.6, between starter wheel C and the pin on arm B.

Action

9.2 To adjust, slacken screw A, Fig.8, which clamps the fork lever B, and turn the trip shaft C until the correct clearance is obtained. Tighten screw A.

10. Traverse Multiplying Lever Pivot (Fig.12)

Note: The adjustment is applicable to keyboard machines only. In the case of receiver machines the pivot should be clamped in its mid-position.

Check

10.1 Check that, with the translator pin box in either position, the ends of the selector frames are in alignment with the pins.

Action

10.2 To adjust, slacken nut D and nut B, and move the pivot of multiplying lever A to suit both positions of the pin box. Tighten nut B and carry out adjustment 9 before tightening nut D.

11. Traverse Multiplying Lever Stop Pin (Fig.12)

Check

11.1 Set the machine up so that it is at rest with the translator unit pin box in its forward position, i.e. nearest the front of the machine.

11.2 Lift the translator unit clutch abutment and turn the machine by hand until the function bars are released.

11.3 Lightly pull the traverse multiplying lever A outwards so that any backlash in the system is taken up. Check that there is a clearance '1' (inset) between the rear end of the slot in lever A and pin C.

11.4 Return the machine to the rest position. Lift the translator unit clutch abutment and turn the machine by hand until the function bars are released.

11.5 Lightly push the traverse multiplying lever A inwards so that the backlash in the system is taken up. Check that a clearance equal to dimension '1' now exists between pin C and the front end of the slot in lever A.

Action

11.6 If necessary, slacken nut D and position pin C until both of the above conditions are satisfied. Tighten nut D.

12. Pecker Clearance (Figs. 5 and 13)

Check

12.1 Lift the translator abutment and turn the translator shaft through two complete revolutions to reset all pins in the pin box to the space condition. Return the shaft to the rest condition and check that all pins have been reset.

12.2 Move the electromagnet to space. Turn the machine by hand until the pecker is opposite the first (inner) pin, and striker lever E, Fig.5, is held from following its cam by the hook of retention arm A.

12.3 Lightly press pecker L, Fig.13, towards pin G to take up any play that may be present and check that the pecker is clear of the pin by an estimated 1/32 - 3/64 in. (.8 - 1.2 mm.), i.e. dimension 'm'.

12.4 Repeat this procedure with the pecker opposite the fifth (outer) pin, i.e. at the other end of the traverse.

Action

12.5 If adjustment is necessary, remove the keyboard (if fitted), and stand the machine on its back. Disconnect pecker frame return spring K, Fig.13, slacken nuts J until friction tight, and, whilst ensuring that the striker driven arm is against the striker lever in the selector unit, position pecker frame H on its shaft until the correct clearance is present at both ends of the traverse. Tighten nuts J, reconnect pecker frame return spring K and replace the keyboard (if fitted).

13. Pecker Traverse (Fig.12)

Check

13.1 Lift the detent on the selector unit, move the electromagnet armature to 'mark' and turn the machine slowly by hand. Check that each pin is struck by the pecker and that the area of contact between the pecker and pins is as great as possible over the complete traverse.

13.2 Repeat this check with the pin box in its alternative position.

Action

13.3 Adjust, if necessary, by slackening screws F and moving traverse pivot bracket E until the above conditions are satisfied for both sets of pins. Tighten screws F.

14. Typehead Carriage End Play (Fig.25)

Check

14.1 Check that there is a maximum of .005 in. (.13 mm.) end play on the typehead carriage E.

Action

14.2 If the end play is excessive, remove screws J, hold the carriage so that the gears and racks remain in mesh and lift off bracket K. Add shims No.2003/277 (.005 in.) as necessary between the bracket and carriage until the end play is below the above limit. Replace screws J.

Note: Bracket K should always be clamped in its extreme left-hand position (viewed from the front of the machine).

15. Print Spring (Figs. 27 and 106)

Check

15.1 Stand the machine on its back and check that a force of approximately 3 lb. (1.36 kg.) applied to the print beam L, Fig.27, at F just moves the beam.

Action

15.2 To adjust, slacken locknut A, Fig.106, and turn screw B until the correct tension is present. Tighten Locknut A.

16. Typehead/Platen Clearance (Figs. 27 and 30)

Check

16.1 Set up the letter 'X' combination (1-345) on the pins. Lift the translator unit abutment and turn the machine by hand until the print lever K, Fig.30, is on the highest point of its cam (just prior to fall off). Check that, with the machine in this condition, there is a clearance of approximately ½ in. (12.7 mm.), i.e., dimension 'aa', Fig.27, between the typehead M and platen N.

Action

16.2 Continue to turn the translator shaft until the typehead moves forward to print. Turn the machine on its back and remove screw J and retainer plate K from the vertical link block G. Disconnect print beam L from block G and slacken locknut H. Turn block G clockwise to increase or anti-clockwise to decrease dimension 'aa'. Re-connect print beam L to block G and re-fit retainer plate K and screw J.

16.3 Re-check dimension 'aa' and repeat the procedure if necessary until the dimension is set up. Tighten locknut H.

17. Print Beam Stop Screw

Check

17.1 With the typehead forward in the printing position, check that there is a clearance of 5/32 - 7/32 in. (4.0 - 5.6 mm.) between the platen and typehead.

Action

17.2 If this is not the case, turn the machine on its back and disconnect the print spring. Add or remove shims No. PW.5199 (.005 in.) as necessary under the print beam stop screw until the above dimension is satisfied. Re-fit the print spring.

18. Corrector Lever (Figs. 32 and 108)

Check

18.1 With the typehead forward in the printing position, gently push the typehead towards the platen and check that the corrector lever, Fig.32, is fully engaged

with the corrector wheel when the typehead is within 7/64 - 1/8 in. (2.8 - 3.2 mm.) of the platen.

Action

18.2 If this condition is not present, it will be necessary to adjust screw A, Fig.108, which is located on the perforator unit casting, until the condition is satisfied.

19. Typehead Corrector (Figs. 25, 32 and 35)

Note: When pushing the typehead against the platen to check printing, push the typehead casting and not the actual typehead.

Check

19.1 With the typehead forward in the printing position, press the typehead against the platen and check that the letter 'X' thus printed is equal in density on both sides of the character. (N.B.: Differences in density between the upper and lower legs should be ignored at this point).

Action

19.2 If necessary, slacken screw H, Fig.32, and turn the eccentric pivot of corrector lever E until the letter 'X' is correctly positioned. Holding the pivot in this position with a spanner, tighten screw H, Fig.32.

Check

19.3 Pull the typehead back so that the corrector is out of engagement, and check, by attempting to turn the typehead, that the backlash is equal in both directions.

Action

19.4 If necessary, slacken nut H, Fig.25, and turn the typehead clockwise or anti-clockwise until the backlash is equal in both directions. When this condition is satisfied, insert a tommy pin into hole G, Fig.35, and, holding the spline shaft with the pin, tighten nut H, Fig.25.

20. Ink Ribbon Unit Pawls (Figs. 28 and 30)

Check

20.1 Remove the ink ribbon spools.

20.2 Set up any print character on the pins, trip the translator clutch and turn the machine by hand until print lever K, Fig.30, is on the highest point of its cam. With the machine in this condition check that there is a clearance of ½ to ¾ of the teeth pitch, i.e. dimension 'ac', Fig.28 (inset B), between retention pawl S and a tooth of ratchet wheel Q.

Action

20.3 To adjust, slacken screws R, move the pawl mounting bracket until dimension 'ac' is set up and tighten screws R.

Check

20.4 Continue to turn the machine by hand until the print operation takes place and, holding the typehead against the platen, check that feed pawl P is resting in a tooth of ratchet wheel Q, and is clear of the next tooth by ¼ to ½ of the teeth pitch, i.e., dimension 'ab', Fig.28 (inset A). Replace the ink ribbon spools unless action is required.

Action

20.5 If adjustment is necessary, slacken screw T (accessible through the right-hand unit side-plate), and turn eccentric U until dimension 'ab' is set up. Clamp eccentric U in this position with screw T and replace the ink ribbon spools.

21. Ribbon Jumper (Figs. 25 and 107)

Check

21.1 Set up any printing character (preferably on the top row of the typehead), trip the translator clutch and turn the machine by hand until the printing operation

takes place. Press the typehead against the platen and check that the upper edge of the ink ribbon is approximately 1/32 in. (.8 mm.) above the type which is in contact with the platen.

Action

21.2 Adjust the height of the ribbon jumper if necessary, by slackening screws D and re-positioning the jumper arm Q, Fig. 107. Tighten screws D.

22. Typehead Height - Initial Setting (Figs. 25 and 35)

Check

22.1 Set up the letter 'K' combination (1234-) on the pins, trip the translator unit clutch and turn the machine by hand until the printing operation has taken place and the aggregate motion levers have ceased to move. Push the typehead against the platen and observe whether the density of the 'K' thus printed is equal at the top and bottom of the character.

Action

22.2 If this is not so, slacken nut L, Fig.25, until friction tight, insert a tommy pin into hole D, Fig.35, and turn the spline shaft until the correct height is set up. Hold the spline shaft with the tommy pin and tighten nut L, Fig.25.

23. No.5 Aggregate Motion Lever (Fig.36)

Check

23.1 With the machine set up as in Instruction 22.1, pull the typehead back so that the corrector is out of engagement and check, by attempting to turn the typehead, that the backlash is equal in both directions.

Action

23.2 If necessary, slacken screw J on No.5 bellcrank lever H (nearest the front of the machine) until friction tight, and adjust the pivot until the backlash is equal in both directions.

24. No.4 Aggregate Motion Lever

Check

24.1 Set up the letter 'Q' combination (123-5) on the pins, trip the translator unit clutch and turn the machine by hand until the printing operation has taken place and the aggregate motion levers have ceased to move.

24.2 Pull the typehead back so that the corrector is out of engagement, and check, by attempting to turn the typehead, that the backlash is equal in both directions.

Action

24.3 If this is not so, adjust the pivot of No.4 bellcrank lever until the correct condition is set up.

25. No.1 Aggregate Motion Lever

Check

25.1 Repeat the above procedure, selecting the letter 'V' (-2345).

Action

25.2 Adjust the pivot of No.1 aggregate bellcrank lever.

26. No.3 Aggregate Motion Lever

Check

26.1 Repeat the above procedure, selecting the letter 'B' (1--45).

Action

26.2 Adjust the pivot of No.3 aggregate bellcrank lever.

27. Typehead Height - Preliminary Setting (Figs. 29 and 36)

Check

27.1 Set up the letter 'K' (1234-) on the pins, trip the translator clutch and turn the machine by hand until the printing operation takes place and the aggregate motion levers cease to move. Press the typehead against the platen so that letter 'K' is printed.

27.2 Repeat this procedure, selecting letter 'X'. Check that the character is equal in density at the top and bottom, and that it is in line with the letter 'K' printed immediately before.

Action

27.3 Adjust by slackening the pivot screw J, Fig.36, of No.2 aggregate bellcrank and raising or lowering the pivot in its slot until the correct typehead height is achieved. Tighten screw J.

Check

27.4 Move shift lever A, Fig.29, to the 'Figures' position, i.e. to the right looking from the rear of the machine. Set up the letter combination corresponding to figure '8', trip the translator unit clutch and turn the machine by hand until the printing operation has taken place and the aggregate motion levers have ceased to move. Press the typehead against the platen and check that the printed character is equal in density at top and bottom and is in line with the letters 'K' and 'X' previously printed.

Action

27.5 Adjust by slackening the pivot screw of the shift bellcrank lever H, Fig.29 (similar to pivot screw J, Fig.36), raising or lowering the pivot in its slot until the correct typehead height is achieved and clamping in this position.

28. Motor Speed

Check

28.1 Ensure that the gears fitted are suitable for the operating speed of the machine.

28.2 Switch on the machine and allow it to run with both clutches latched up. Using Fork Stroboscope No. TA.1117/140, check that the motor is running slightly fast.

28.3 Transmit character '5' (Figs. Shift, ----5) into the machine at cadence speed. Observe that the motor is running slow by an amount similar to the 'fast' error noted in Instruction 28.2.

Note: This procedure checks the motor speed under minimum and maximum load conditions, as the load varies depending upon the combination set up on the pins.

Action

28.4 Adjust the governor by means of the screw visible through the governor cover, until conditions 28.2 and 28.3 are satisfied.

29. Selector Camshaft Retainer - Final Check (Fig.4)

Check

29.1 Trip the selector clutch several times and check that when the clutch comes to rest there is still some clearance between the clutch trigger L and its back-stop, P, i.e. dimension 'c'.

Action

29.2 If this is not so, refine adjustment 3.2.

30. Typehead Height - Final Check

Check

30.1 Print a line consisting of all characters on the top level of the typehead. Then print alongside a line consisting of all second level characters. Print a further line of top lever characters and, using these as a reference, check that the second level is at the correct height. Check also that the upper and lower legs of the characters are of equal density.

30.2 Repeat this procedure with each level in turn, using the top level as a reference.

Action

30.3 If this is not so, refine adjustment 27 and, if necessary, adjustment 22.

Note: On later machines, a stop block, mounted between the narrow and wide rack guides, can be used to eliminate any tendency for the 4th layer to lift too high, by limiting the backward movement of the lift rack.

31. Starter Switch Timing (Figs. 6, 10 and 11)

Note: The starter switch may be adjusted to give a delay of between 60 and 110 seconds at 50 bauds, or 40 to 75 seconds at 75 bauds, from the receipt of the last signal to the switching off of the motor. These values are minimum values, i.e. assuming that the pin on block B, Fig.6, is picked up immediately by a feed hole in starter wheel C. Therefore, the actual delays will, in general, be greater than this, depending upon the position of the starter wheel when the last character is received.

Check

31.1 Ensure that the plate on link Q, Fig.11, is in the correct position for the operating speed of the machine, i.e. fully raised on 45.5 and 50 baud machines, and fully lowered on 75 baud machines.

31.2 If this is not so, slacken screws P and raise or lower the plate as necessary. Tighten screws P.

31.3 Ensure that the machine is in the rest condition, i.e. with both clutches latched up. Disengage the pin on block B, Fig.6, from starter wheel C and allow the right-hand end of starter beam J, Fig.10, to rise as far as it will go.

31.4 Run the machine or turn it over by hand until the starter pin on block B, Fig.6, drops into a feed hole on starter wheel C.

31.5 From this point, run the machine and check that the motor switches off after the required delay.

Action

31.6 If necessary, adjust the delay as follows:-

(a) Slacken the locknut of screw R, Fig.11, and unscrew it as far as possible.

(b) Repeat 57.3 and 57.4.

(c) From this point, run the machine until the required moment of switch-off is reached and switch off the machine.

(d) Steady link Q, Fig.11, and turn screw R until the microswitch under the main base just operates. Clamp screw R with the locknut.

32. Punch Link Setting (Fig.109)

Check

32.1 With the machine in the rest position, ensure that cam rollers B and C are touching their respective cams.

Action

32.2 If this is not so, tilt the machine on its back, slacken the nut behind roller C (accessible through a hole in the base casting) and turn eccentric A until the correct correct condition is obtained. Tighten the nut.

33. Selector Levers (Figs. 110 and 111)

Check

33.1 Turn the machine to the rest position and check that the blocks F, Fig.111, are against pin H. Operate the "T" key (code ----5) if the machine is fitted with a keyboard. If the machine has no keyboard, set the 5th element pin in the pin box to the mark position. Lift the translator detent and turn the machine through about half a revolution of the translator camshaft and check that the 5th element punch selector lever D, Fig.110 (the bottom one), just covers punch E, as shown in the inset.

Action

33.2 If necessary, slacken the socket-headed grub screw G, Fig.111, and slide the cable sleeve in or out until the required condition is obtained. Tighten screw G.

33.3 Repeat 33.1 and, if necessary, 33.2 for each selector lever in turn until all five cables have been correctly adjusted.

Check

33.4 With the machine in the rest position and all pins set to space, trip the translator clutch and turn the machine by hand until the selecting levers D, Fig.110, have moved to the limit of their excursion towards the front of the machine. Check that selector levers D are now clear of punches E by approximately 1/32 in. (.8 mm.). This ensures that the cables are moving freely.

Action

33.5 If necessary, free the cables and repeat adjustments 33.1 to 33.4 inclusive until the condition in check 33.4 is satisfied.

34. Punch Stroke - Initial Setting (Figs. 106, 109 and 110)

Check

34.1 With the machine in the rest position, check that the endwise movement of punches E, Fig.110, is between .003 - .030 in. (.08 - .76 mm.). Check also that all slack movement in punching link L, Fig.109, is taken up by the punch retraction spring C, Fig.106.

Action

34.2 Slacken 6BA locknut K, Fig.109, and unscrew link J until it is slack and the punches have little or no endwise movement. Slowly re-tighten link J until the slack is just taken up and then tighten by a further half-turn. Tighten locknut K. Check that the end shake of the punches lies within the limits laid down in check 34.1 above. If the endwise movement is not within limits, refine the adjustment of link J.

35. Tape Feed Lever (Fig.112)

Check

35.1 Turn the machine to the rest position and hold roller T down on to its cam. Hold block R against feed lever Q, and check that there is a clearance of up to .005 in. (.13 mm.), i.e. dimension 'cb', between stop plate S and rack U.

Action

35.2 If necessary, slacken the locknut of eccentric pivot V and turn the pivot to obtain clearance 'cb'. Tighten the locknut.

36. Tape Feed (Figs. 99, 112, 113, 114 and 120)

Check

36.1 With the machine in the rest position, lift the tape-feed vertical link A, Fig.120, until block B is touching rack C. Check that there is an estimated clearance of .020 - .035 in. (.51 - .90 mm.) i.e., dimension 'c1' between feed lever D and latch E.

Action

36.2 If necessary, slacken screw F to friction tight and move block B up or down to achieve dimension 'c1'. Tighten screw F.

Check

36.3 Check that throwout lever C, Fig.114, is clear of feed pawl D by approximately 1/16 in. (1.6 mm.).

36.4 If necessary, slacken the 8 BA locknut securing screw A and turn the screw clockwise to obtain this condition. Tighten the locknut.

Check

36.5 Check that back-feed pawl E is clear of its ratchet.

Action

36.6 If necessary, slacken the nut securing stop pin B and move the stop pin to satisfy check 36.5. Tighten the nut.

Check

36.7 With the machine in the rest position, check that the feed pawl is operating on the correct tooth. The capstan head screw W, Fig.113, (also shown at F on Fig.114) should be directly behind the feed spindle centreline.

Action

36.8 If the feed pawl is operating in the wrong tooth, slacken the nut securing eccentric P, Fig.112, and turn the eccentric to the top mid-position. Tighten the nut. Remove the circlip and shim securing block N and slide the block and rod X off pivot Y. Slacken nut M and screw block N along the thread to obtain the required setting, taking care that there is always at least 1/8 in. (3.2 mm.) of threaded rod left in the block. Replace block N on pivot Y. Replace the shim and circlip and tighten nut M carefully, making sure that the block moves freely on pivot Y.

Check

36.9 Feed a length of punched tape into the punch block. With the machine in the rest position, turn feed knob V, Fig.99, in an anti-clockwise direction until resistance is felt. This movement should be approximately equal to 1/4 of the feed hole diameter and it can be checked by sighting at position Z, Fig.113.

Action

36.10 If necessary, slacken the nut securing eccentric P, Fig.112, and turn the eccentric using the top half of its throw to obtain the required setting. Tighten the nut.

Check

36.11 Set up any 'feeding' character on the pin box. Trip the translator clutch and turn the machine by hand until feed lever Q, Fig.112, has moved fully to the right. Check, by turning feed knob V, Fig.99, that the tape feed spindle has turned through only one pitch. By turning feed knob V clockwise check that there is some backward movement present. Return the machine to the rest position. Repeat the check using the runout shaft instead of the translator shaft.

Action

36.12 If either condition in 36.11 is not satisfied, refine adjustment 36.10.

37. Tape Feed Latch (Figs. 99, 113 and 115)

Check

37.1 Check that the slot between the tines of the tape guide M, Fig.99, is centrally disposed about the teeth of feed wheel R.

37.2 Insert a length of tape punched with feed holes into the perforator and check that the tips of the tines are just touching the tape. This check may be carried out as follows:-

Raise the retention lever L, Fig.115, out of engagement with the sprocket wheel K. Raise the guide M, Fig.99, and turn knob V, noting the force required to do so. Lower the guide M on to the tape, and turn the knob V again. There should be no discernible difference in the force required to turn the knob. Check also that there is no gap between the tips of the tines and the tape.

Action

37.3 If either of these checks is not satisfied, remove spring K, Fig.99, slacken nut U and turn eccentric screw T until the hook of latch J is disengaged from frame Q, as shown by dimension 'f'.

37.4 Slacken screws S and, pressing the tape lightly on to the rollers with guide M, slide the latter backwards and forwards until its curved underside is positioned concentrically with the rollers, ensuring that the slot in the guide remains centrally disposed with respect to the feed wheel teeth R. Tighten screws S.

37.5 Replace spring K. Insert two thicknesses of tape punched with feed holes, into the perforator. Adjust eccentric T until, with the guide M resting on the tape, the hook of latch J is just touching the engagement face of frame Q, i.e. dimension 'f' is no longer present. Clamp eccentric T with its locknut U.

37.6 Remove one thickness of tape. Slacken screws S again and move guide M towards frame Q until the tips of the tines on guide M just touch the tape. Ensure that the slot in guide M is still centrally disposed about the feed wheel teeth and tighten screws S.

38. Feed Hole Pitch (Fig.115)

Check

38.1 Perforate a length of tape and check the pitch of the feed holes over a length of not less than ten inches of tape. It should either be constant, or increase or decrease regularly, so that the total change of pitch is not greater than half a feed hole pitch in the ten inches of tape.

Action

38.2 If the feed hole pitch is irregular, refine adjustments 37.3 to 37.6 inclusive.

38.3 If the feed hole pitch varies regularly, but the cumulative variation over ten inches is greater than half a feed hole pitch, slacken the nut securing eccentric J and turn the eccentric until the feed hole pitch is regular. Tighten the nut.

38.4 If necessary, refine adjustments 36 and 38.3 until the condition is satisfied.

39. Back Space (Figs. 113 and 114)

Check

39.1 Press lightly on roller H to bring back-feed pawl E into contact with its ratchet, and check that the tip of pawl E lies in the middle of the ratchet tooth, as shown in the inset of Fig.114.

Action

39.2 If necessary, set bracket G to obtain the required condition.

Check

39.3 Feed a length of punched tape into the punch block. Slacken the 8BA locknut securing screw A and turn the screw anti-clockwise until feed pawl D has been

moved out of engagement with the ratchet by lever C. Press roller H towards the rear of the machine until it is hard against its stop. Hold it in this position and turn feed knob V, Fig.99, clockwise until resistance is felt. This movement should be approximately equal to ½ of the feed hole diameter and can be checked by sighting at position Z, Fig.113.

Action

39.4 If necessary, slacken the nut securing stop pin B, Fig.114, and slide the pin in its slot until the required condition is obtained. Tighten the nut.

Check

39.5 With the back-feed lever in the rest position, check that the back-feed pawl E is clear of its ratchet. This can be checked by turning feed knob V, Fig.99, in a clockwise direction. If the knob can turn, the pawl is clear of its ratchet.

Action

39.6 If feed knob V cannot be turned as in 39.5, refine 39.4.

39.7 With the machine in the rest position, slacken the 8BA locknut of screw A, Fig.114, and turn the screw clockwise until there is a clearance of .005 - .015 in. (.13 - .38 mm.), i.e. dimension 'cc' between throwout lever C and feed pawl D. Tighten the nut.

Check

39.8 Press roller H several times in the direction of the arrow. Check that, each time the roller is pressed, the feed spindle is rotated in an anti-clockwise direction by one complete pitch, and then located securely by the retention roller.

Action

39.9 If necessary, refine 39.4 and 39.7.

40. Runout Control Lever (Fig.116)

Check

40.1 With the machine in the rest position, check that trip lever L and runout control cam lever M are each within .005 in. (.13 mm.), i.e. dimension 'cd', of the underside of control lever P.

Action

40.2 Slacken nut N and push screw K and lever M down as far as they will go. Tighten nut N friction tight and gently prise lever M upwards until its tail just touches control lever P. Tighten nut N. Hold roller Q down on its cam when finalizing this adjustment.

Check

40.3 Trip the selector clutch and turn the machine by hand, so that control lever P is lifted by lever L. Check that the bend in shaft T does not foul any other component during its movement.

Action

40.4 Slacken the screw and nut securing lever P and re-position the lever on shaft T until the foul is cleared.

41. Runout Disablement Pin (Figs. 116 and 117)

Check

41.1 With the machine in the rest position and all three clutches disengaged, check that lever S, Fig.117, is so positioned axially along shaft T that the disablement pin R is approximately at right angles to detent lever U.

Action

41.2 If necessary, slacken screw V and move lever S along shaft T to satisfy the condition required.

Check

41.3 Check that the engagement between pin R and detent lever U is about half the thickness of the lever U, i.e. approximately 1/32 in. (.8 mm.).

Action

41.4 Hold control lever P, Fig.116, down on to levers L and M, and position lever S, Fig.117, on shaft T to obtain the required condition. Tighten screw V.

42. Runout Clutch Detent (Fig.118)

Check

42.1 With the runout shaft in the rest position, trip the clutch by depressing lever D, Fig.118. Check that there is a clearance of 1/64 - 1/32 in. (.4 - .8 mm.), i.e. dimension 'ce', between pawl A and detent B, Fig.118 (inset).

Action

42.2 Slacken the nut of eccentric E and turn the eccentric (accessible from the front of the machine) to obtain the required clearance. Tighten the nut.

Check

42.3 Return the runout shaft to its rest position. Check that there is an engagement of 3/64 - 1/16 in. (1.2 - 1.6 mm.) i.e. dimension 'cf', between detent B and pawl A.

Action

42.4 Note: This adjustment should not normally require attention at routine maintenance visits.

Remove the Selector Unit. Slacken screws G and ease rack C up or down to satisfy dimension 'cf', ensuring that lever H is resting in the bottom of its slot in rack C. Tighten screws G. Replace the Selector Unit.

43. Motor Start (Figs. 6 and 118)

Check

43.1 Check that there is a clearance of more than .005 in. (.13 mm.), i.e., dimension 'cg', between the tail of lever D, Fig.118, and trip lever J. Check also that, when lever D is depressed, there is a clearance of .005 - .015 in. (.13 - .38 mm.), i.e. dimension 'f', Fig.6, between starter wheel C and the pin on arm B.

Action

43.2 Slacken screw K, Fig.118, and move trip lever J around its shaft to obtain the required clearance. Tighten screw K.

44. Punching - Final Adjustment (Figs.111 and 118)

Check

44.1 Load two tapes into the punch block. Switch on the motor. Press the top end of the transfer levers K, Fig.111, towards the left to set up an all-mark condition at the punch block. Hold down lever D, Fig.118, until about 12 inches of tape has been produced. Check that a regular series of clean, round holes has been perforated in the tape. Repeat this check using the translator shaft instead of the runout shaft and again check the quality of the perforations.

Action

44.2 If the holes are not fully punched or the punches drag in their holes, refine adjustment 34.2.

45. Printing Position - Final Adjustment (Fig.119)

Check

45.1 Print and punch a sample of tape containing all the characters available. Check that these characters are centrally disposed between the feed holes.

Action

45.2 Slacken nut N. Slacken nuts M and adjust them along screw P until the required condition is achieved. Lock nuts M together and tighten nut N.

46. Tape Feed Suppression (Figs. 29 and 120)

Check

46.1 Turn the machine to the rest position. Move shift lever A, Fig.29, to the 'Letters' shift position, (i.e. to the left, looking from the rear of the machine). Set up a combination on the pins in the pin box which will suppress the tape feed action in 'Figures' shift only, (i.e. 'Bell', 12-4 -, the secondary of the letter 'J' on standard machines). Trip the translator clutch and turn the machine by hand until the function selection has taken place, and the 'Bell' function bar G, Fig.120, has moved as far as possible towards the rear of the machine. Check that, with set collar K against bracket J, there is a clearance of .005 - .010 in. (.13 - .25 mm.), i.e., dimension 'ch', between suppression spade H and 'Bell' function bar G.

Action

46.2 If necessary, slacken screw L and move set collar K along the suppression shaft P until the required clearance is obtained. Tighten screw L, taking care that the head of the screw clears bracket J.

Check

46.3 With the machine set up as in 46.1, check that there is a clearance of .002 - .010 in. (.05 - .25 mm.), i.e. dimension 'cj', between pin on block M and latch E.

Action

46.4 Slacken screw N. Hold collar K against bracket J and move block M along shaft Q to obtain clearance 'cj'. Tighten screw N.

Check

46.5 With the machine set up as in 46.1, except that shift lever A, Fig.29, should be set to the 'Figures' position, check that tape feed lever D, Fig.120, clears latch E by more than .010 in. (.25 mm.) i.e. dimension 'ck'. Check also that lever D does not foul print shackle P.

Action

46.6 If necessary, refine adjustment 46.4.

47. Runout Keybar (Fig.121)

Check

47.1 With cover unit fitted and lids closed, depress the runout button (located on the top of the case) and check that it operates approximately 1/16 in. (1.6 mm.) before reaching its bottom stop.

Action

47.2 If necessary, slacken nut P, Fig.121, and move lever Q to obtain the required condition. Tighten nut P.

48. Back Space Lever (Fig.122)

Check

48.1 Open and close the front cover lid, and check that there is a clearance of 1/32 - 1/16 in. (.8 - 1.6 mm.), i.e. dimension 'cm', between block S, Fig.122, and roller R. Check also that the rounded part of block S engages the centre of roller R when the keybar is depressed.

Action

48.2 If necessary, adjust block S.

(a) Vertically, by slackening screw T and moving the block up or down in its slot. Tighten screw T, or

(b) Horizontally, by slackening nut U and swinging lever V. Tighten nut U.

Check

48.3 With the lid closed, check that the keybar operates the back space mechanism correctly.

Action

48.4 If necessary, refine adjustment 48.2.

## AMENDMENTS TO INSTRUCTION BOOK No.75 (JULY 1959 ISSUE) APPLICABLE ONLY TO MODEL PR SEVENTY-FIVE PRINTING REPERFORATORS WHICH ARE FITTED WITH A TRANSMITTER

nendment No. I

On pages 35 and 36, amend paragraph 59 - Lagweight Spring - as follows:-

(a) 59.1 to 59.11 as for Instruction Book No.75.

(b) Delete existing paragraph 59.12 and insert the following:-

59.12 Remove the tape from the punch head. Mark the feed knob with a pencil line and make a corresponding mark on the punch block casting.

(c) Delete existing paragraph 59.13 and insert the following:-

59.13 Runout 'Space' from the keyboard and note the number of revolutions made by the feed knob in one minute.

For 45.5 baud operation this should be 22-3/4 revolutions

" 50 " " " " " 25 "

" 75 " " " " 37-1/2 "

(d) 59.14 to 59.16 as for Instruction Book No.75.

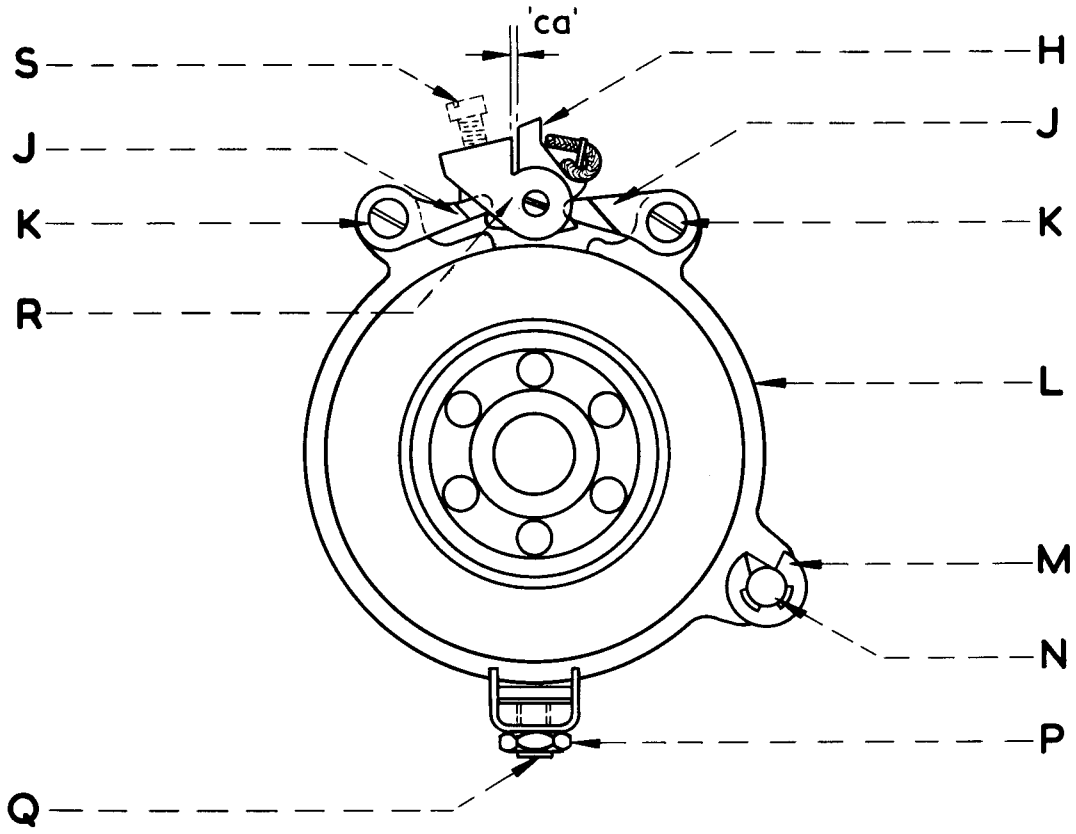


FIG. 2A

DIMENSIONS

| | | | | |
|---|---|---|---|---|
| 'ca' | FOR SELECTOR UNIT:- | ·035 – ·040 | INCH | (·90 – 1·02 MM) |
| | FOR TRANSLATOR UNIT:- | ·040 – ·045 | INCH | (1·02 – 1·15 MM) |

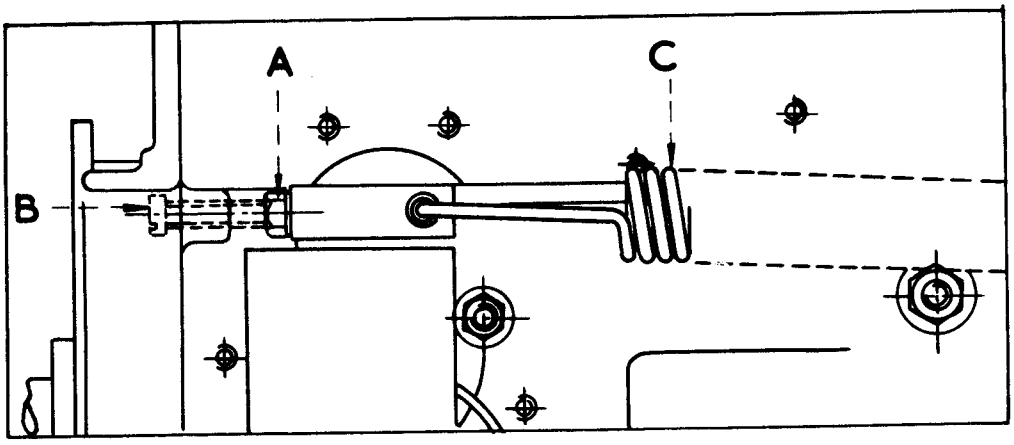


FIG. 106

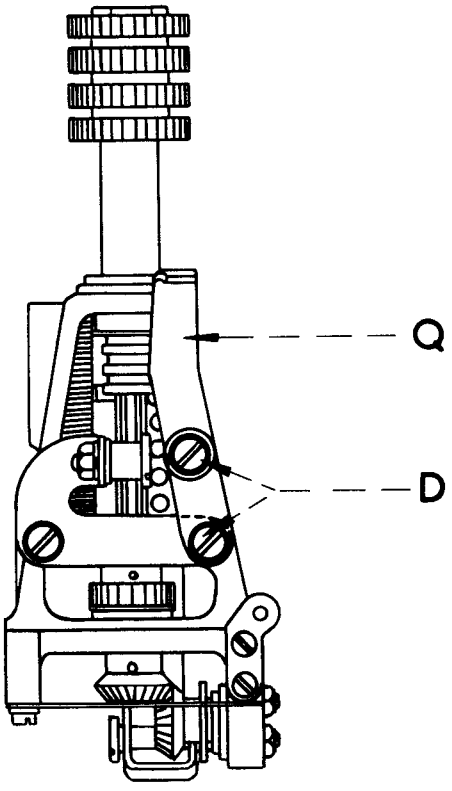


FIG. 107

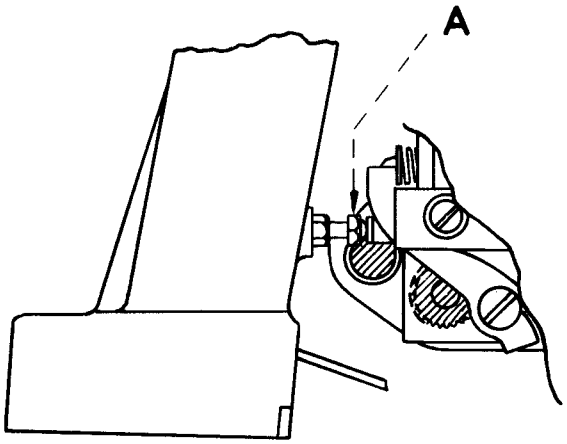


FIG. 108

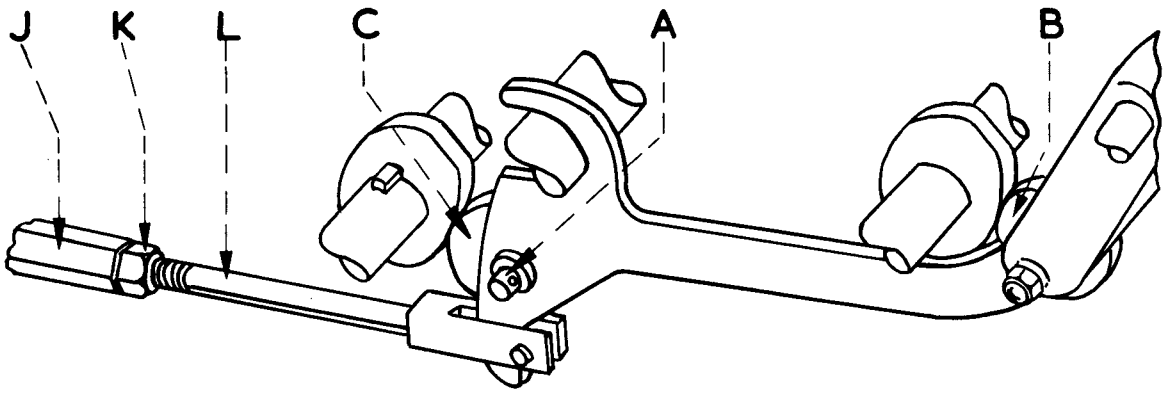


FIG. 109

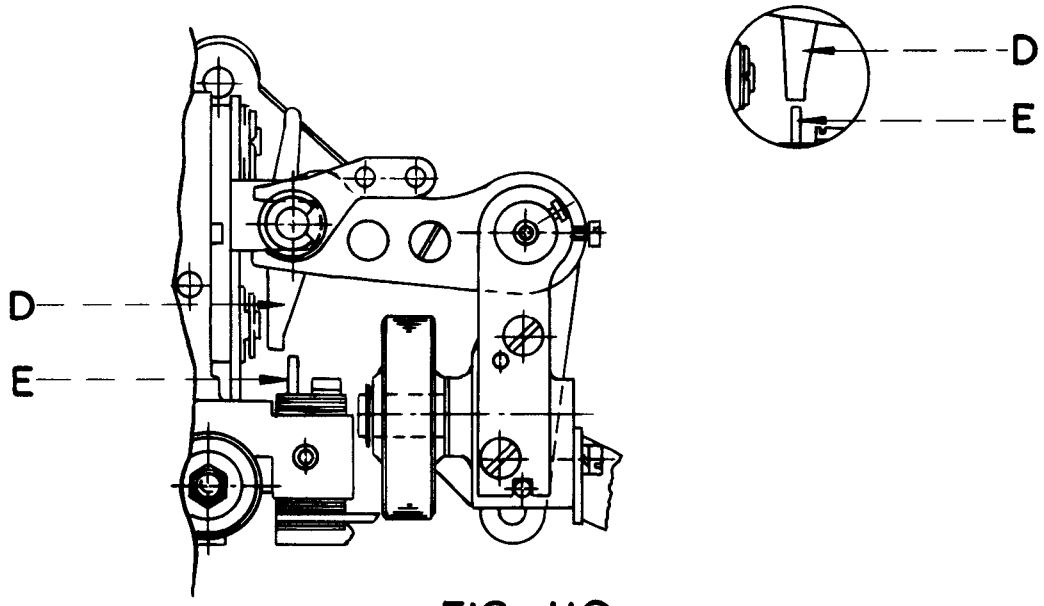


FIG. 110

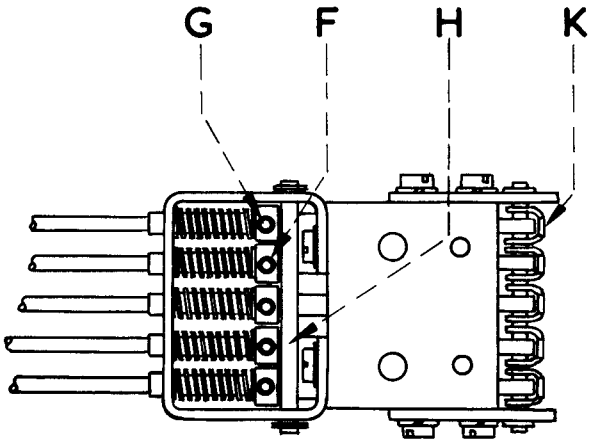


FIG. 111

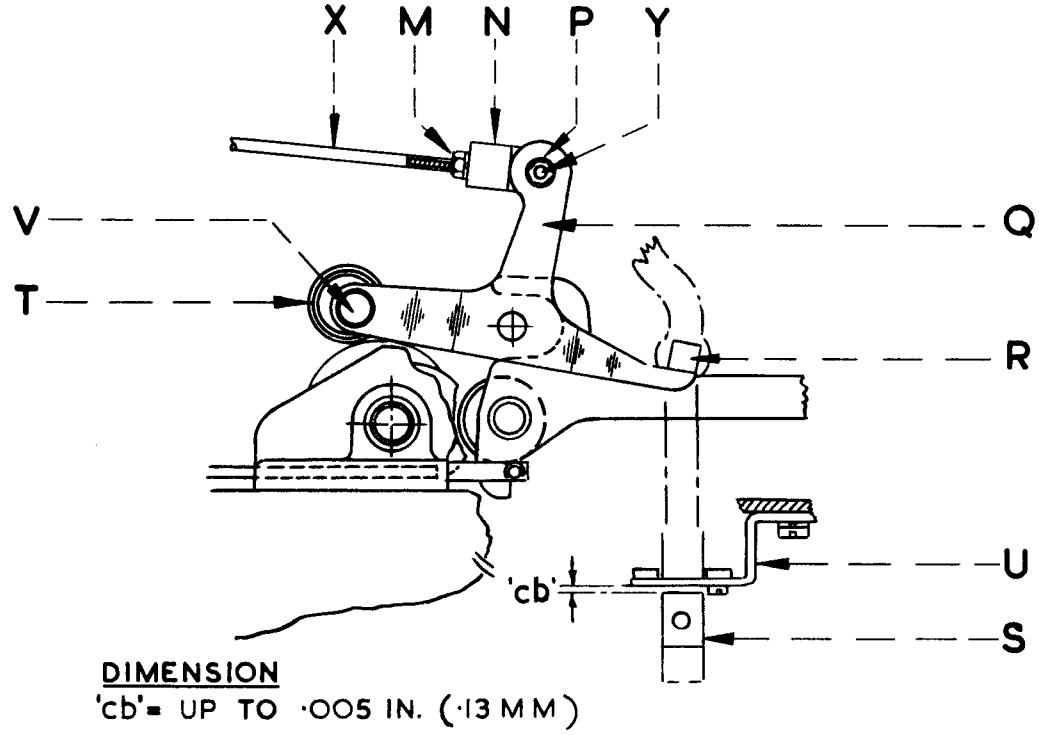


FIG. 112

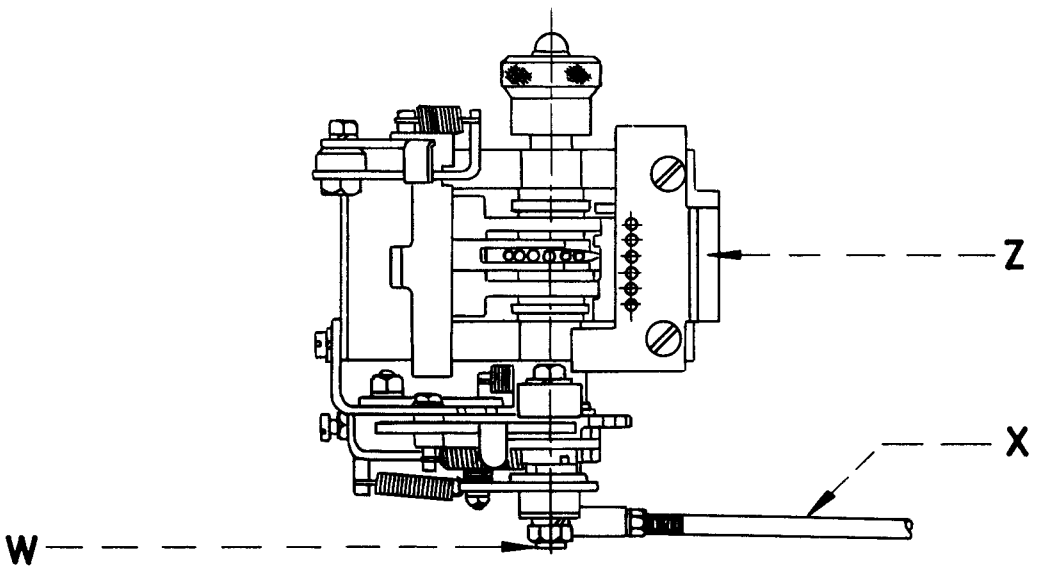


FIG. 113

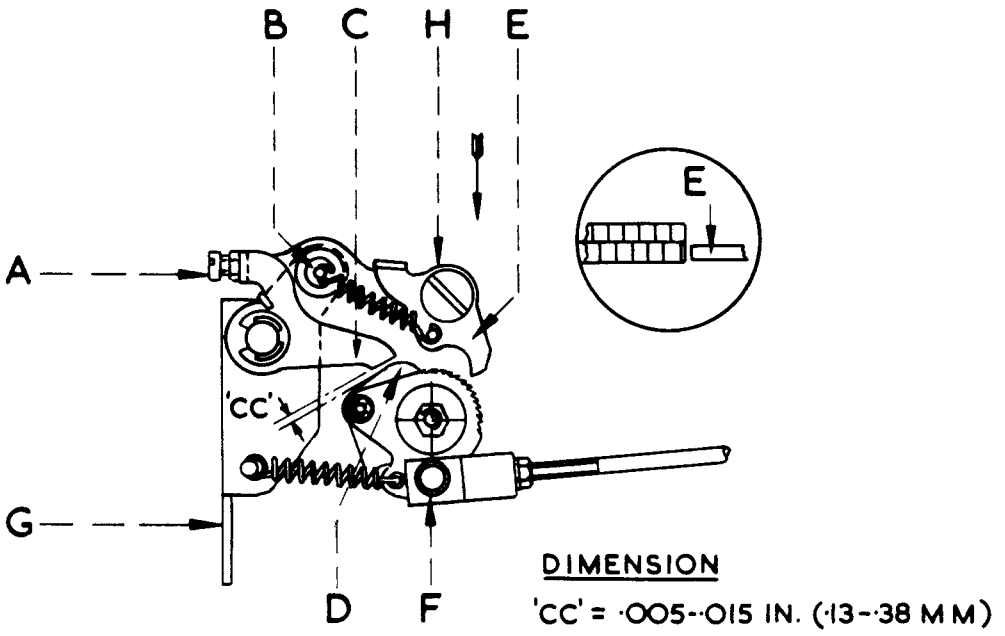


FIG. 114

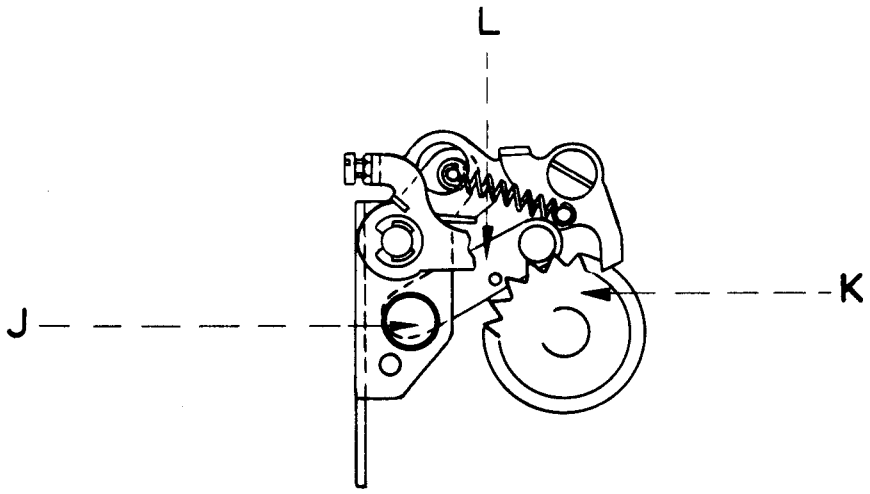


FIG. 115

EL 34/141

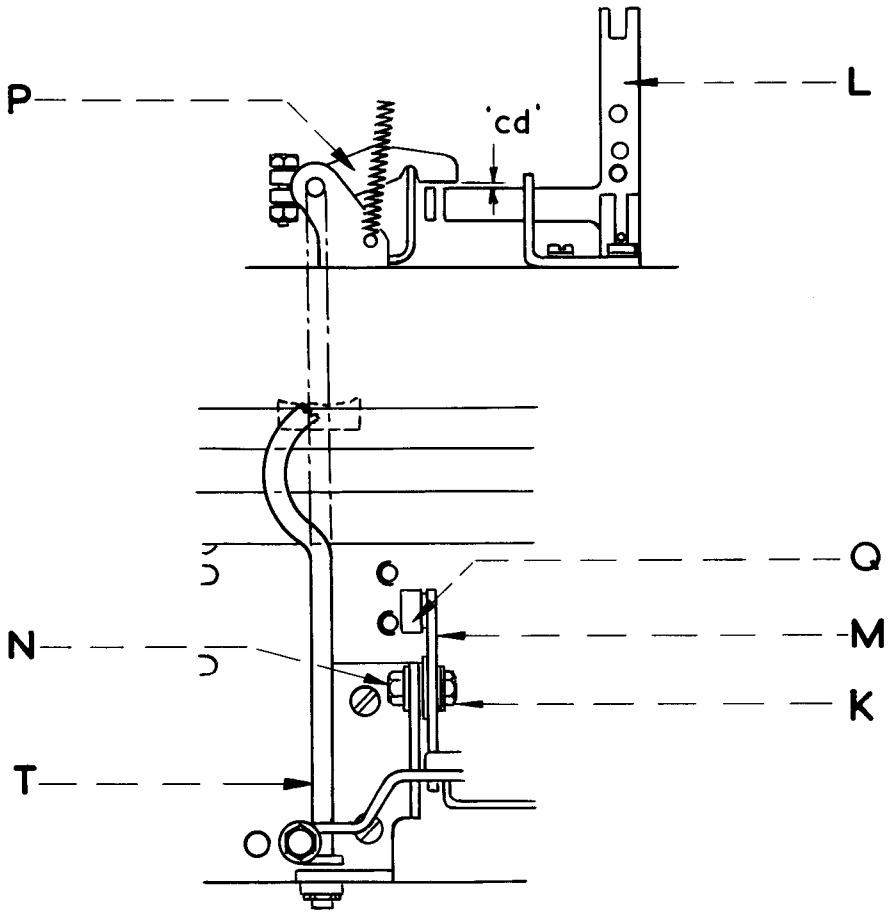


DIMENSION 'cd' = UP TO ·005 IN.(·13 MM)

FIG. 116

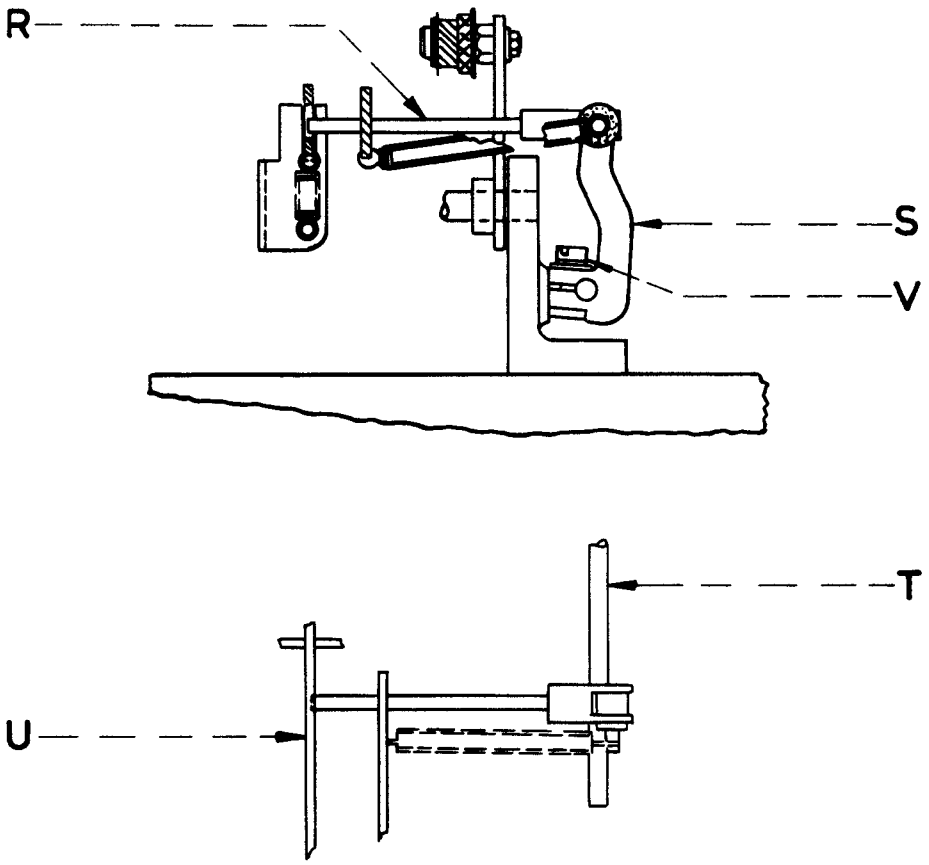


FIG. 117

EL34/143

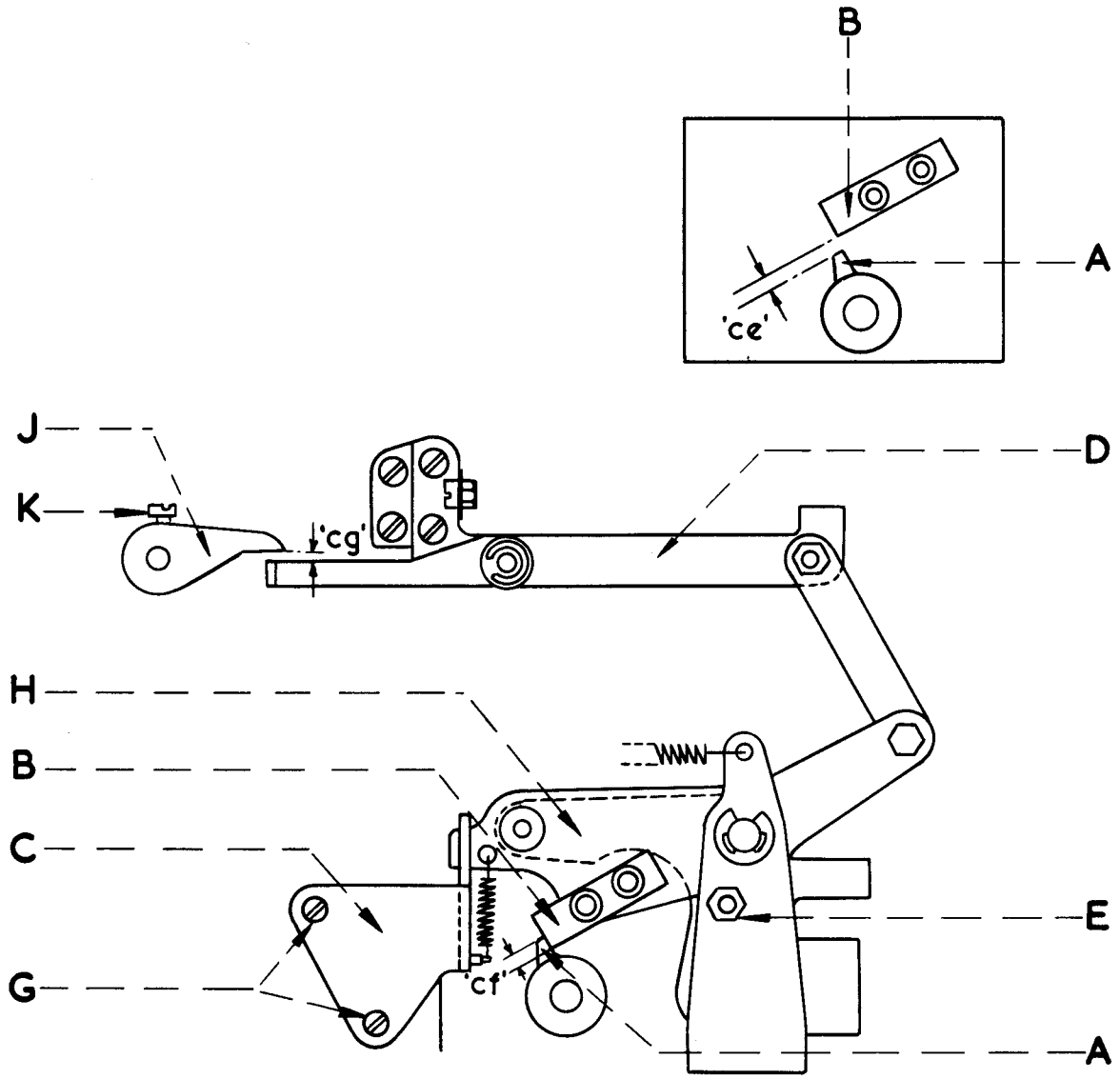


DIMENSIONS

'ce' = 1/64 - 1/32 IN. (·4 - ·8 MM)
'cf' = 3/64 - 1/16 IN. (1·2 - 1·6 MM)
'cg' = MORE THAN ·005 IN. (·13 MM)

FIG. 118

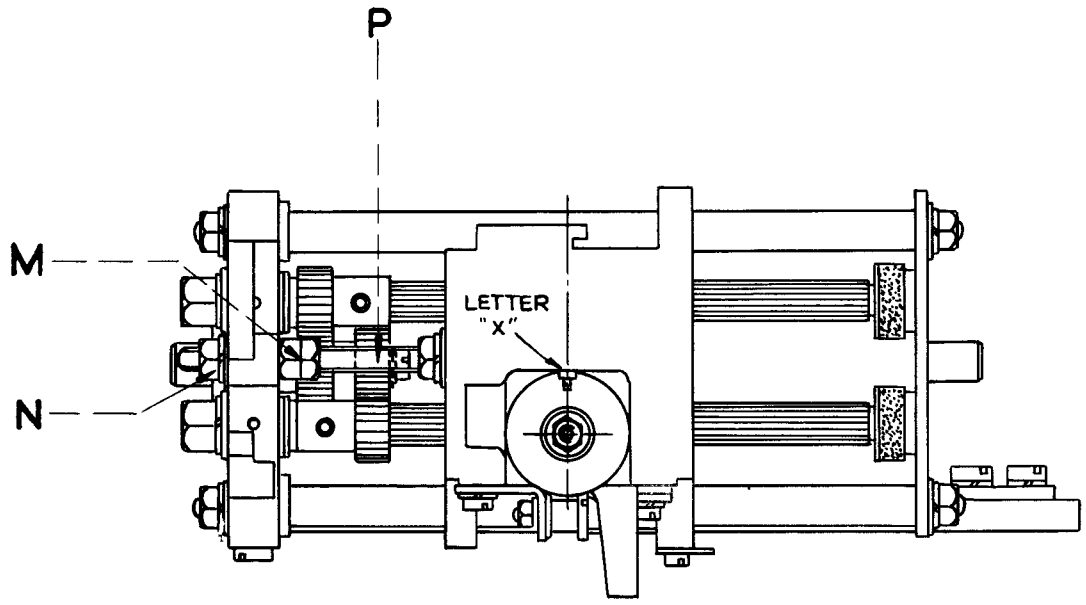


FIG. 119

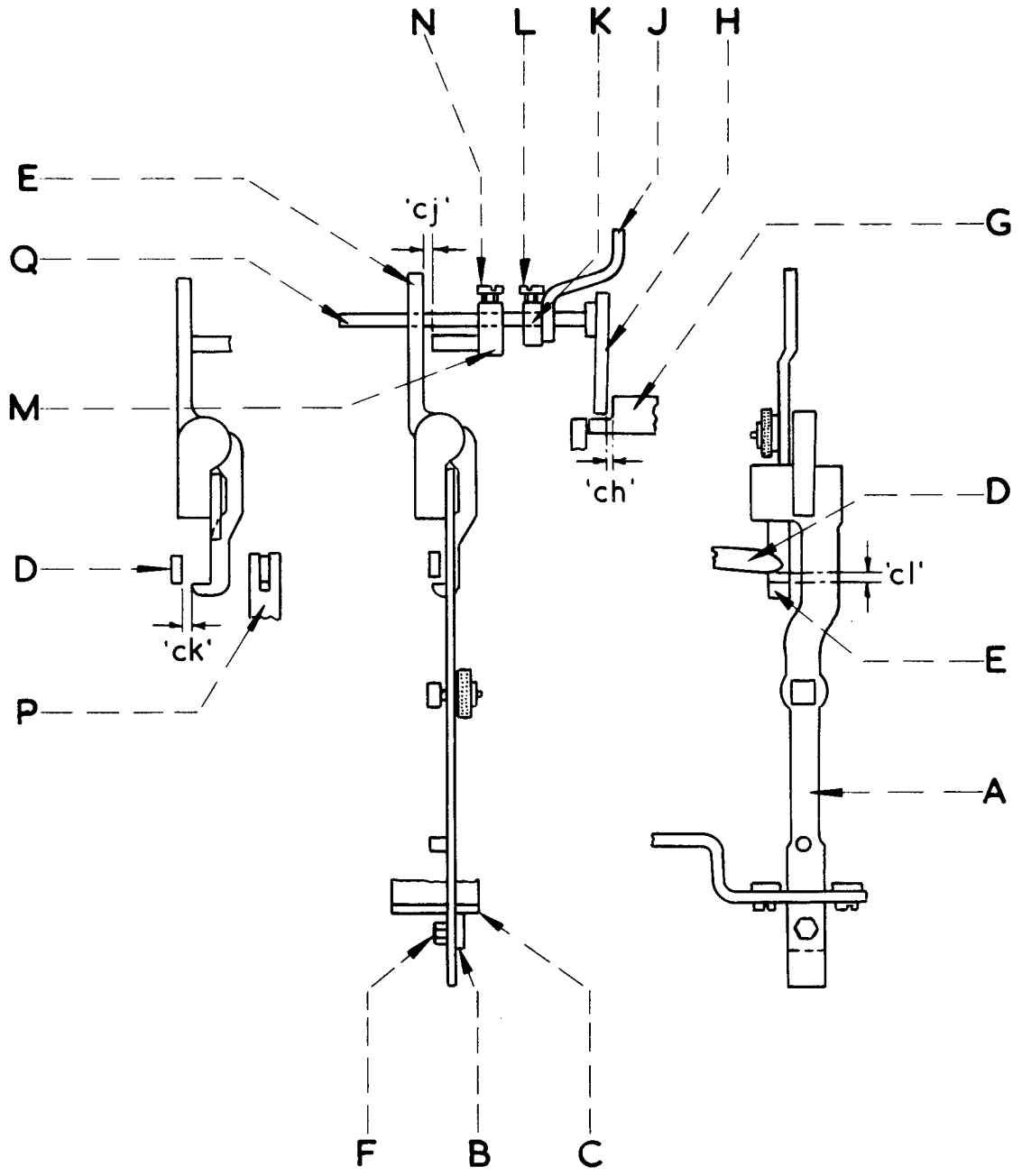


DIMENSIONS

'ch' = ·005 - ·010 IN. ( ·13 - ·25 MM )
'cj' = ·002 - ·010 IN. ( ·05 - ·25 MM )
'ck' = MORE THAN ·010 IN. ( ·25 MM )
'cl' = ·025 - ·035 IN. ( ·51 - ·90 MM )

FIG. 120

EL 34/146

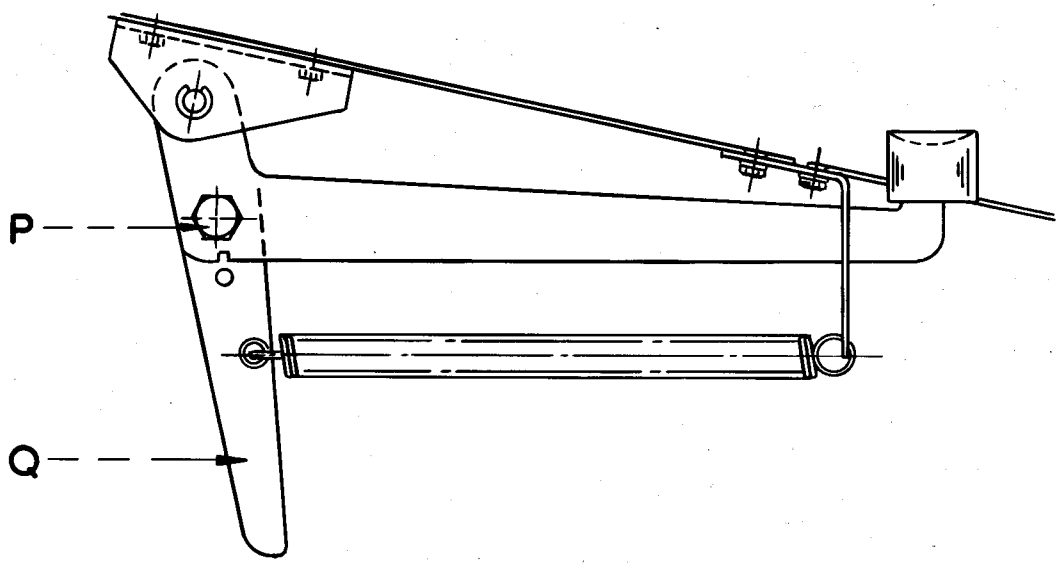


FIG. 121

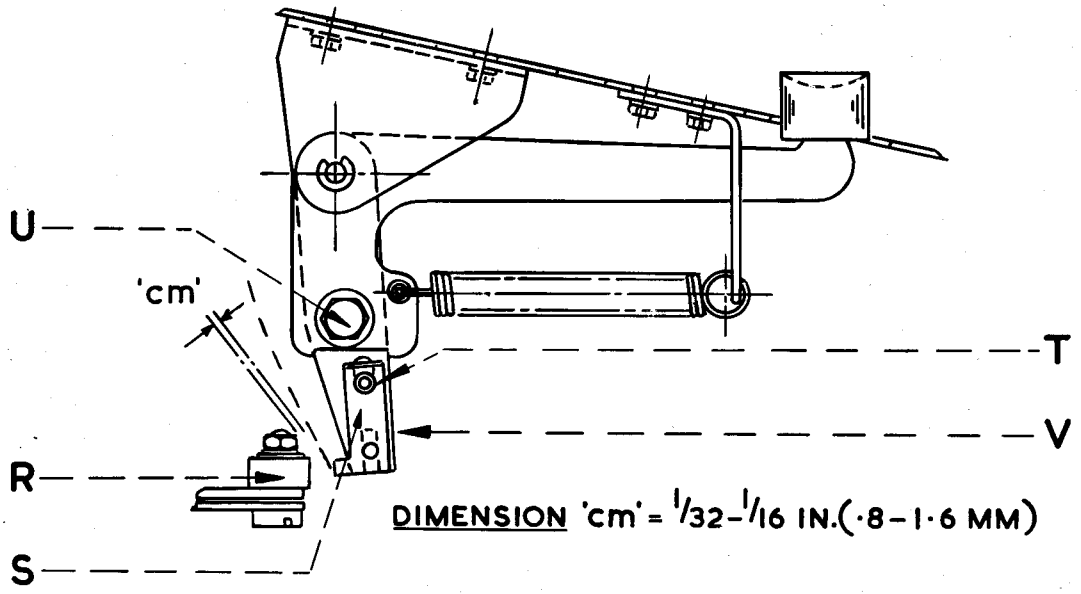


FIG. 122